TÄRNÖ

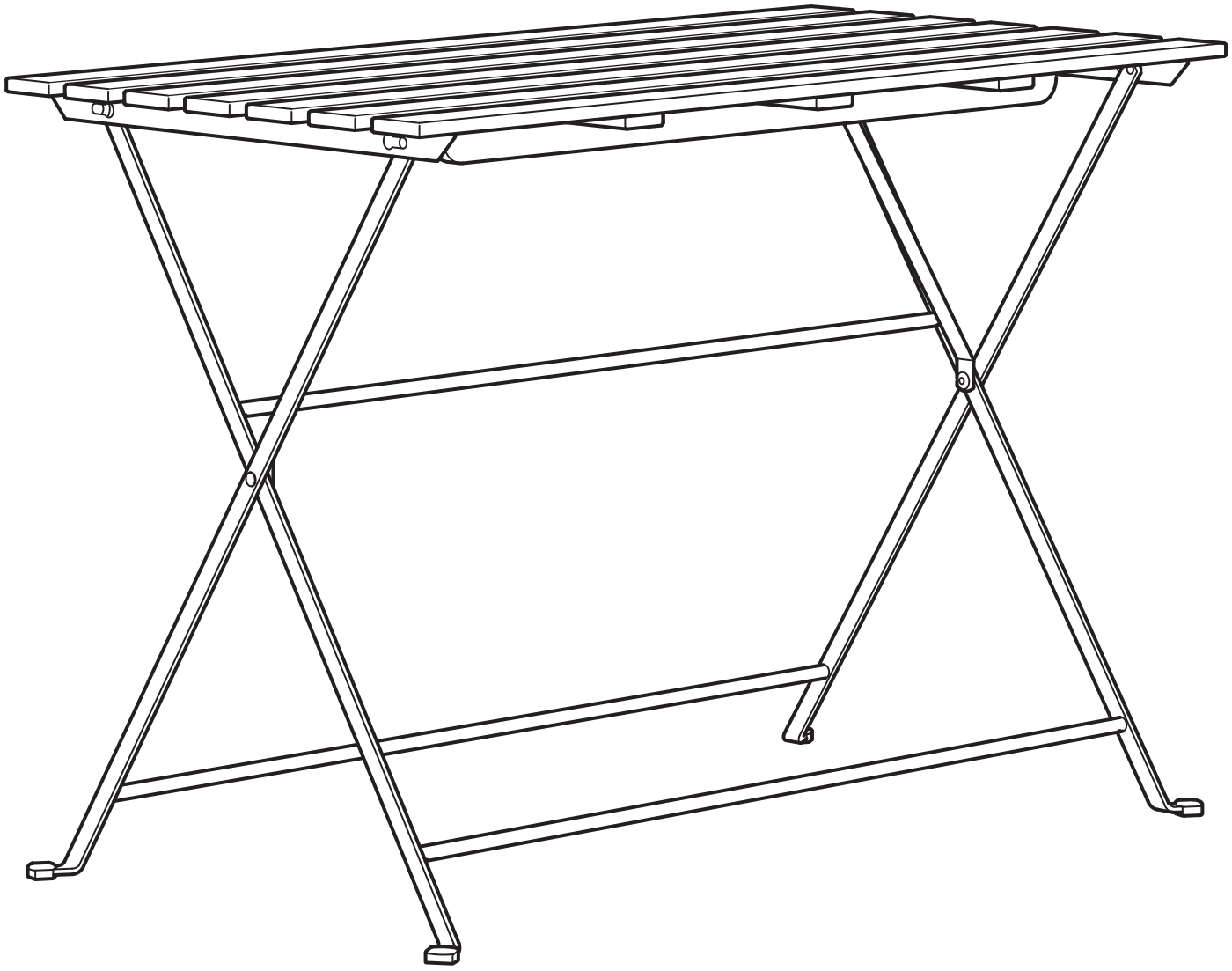

Design and Quality
IKEA of Sweden

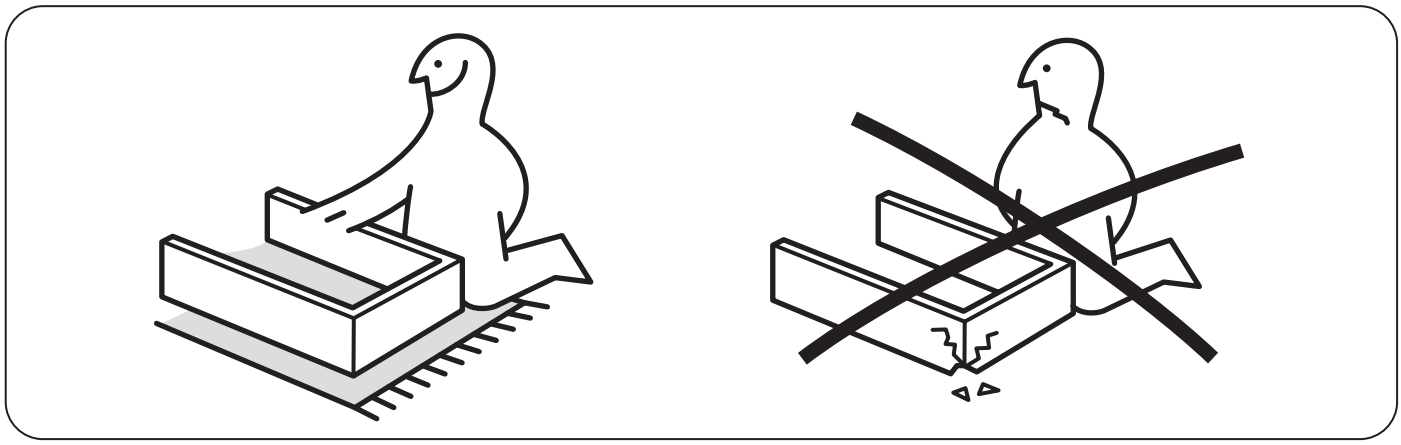

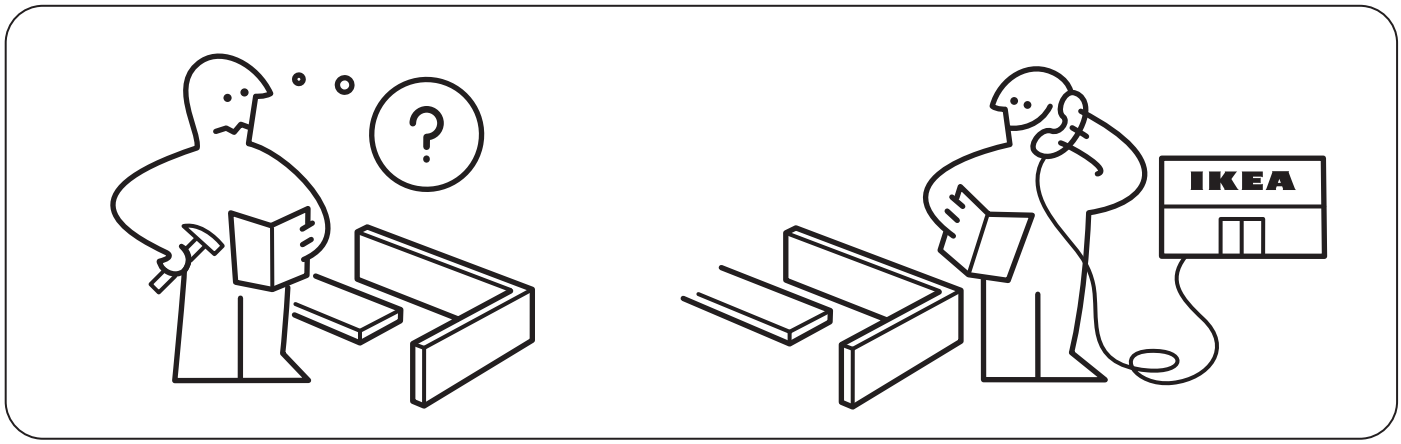

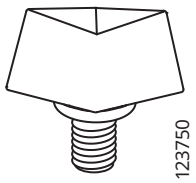

2x

1

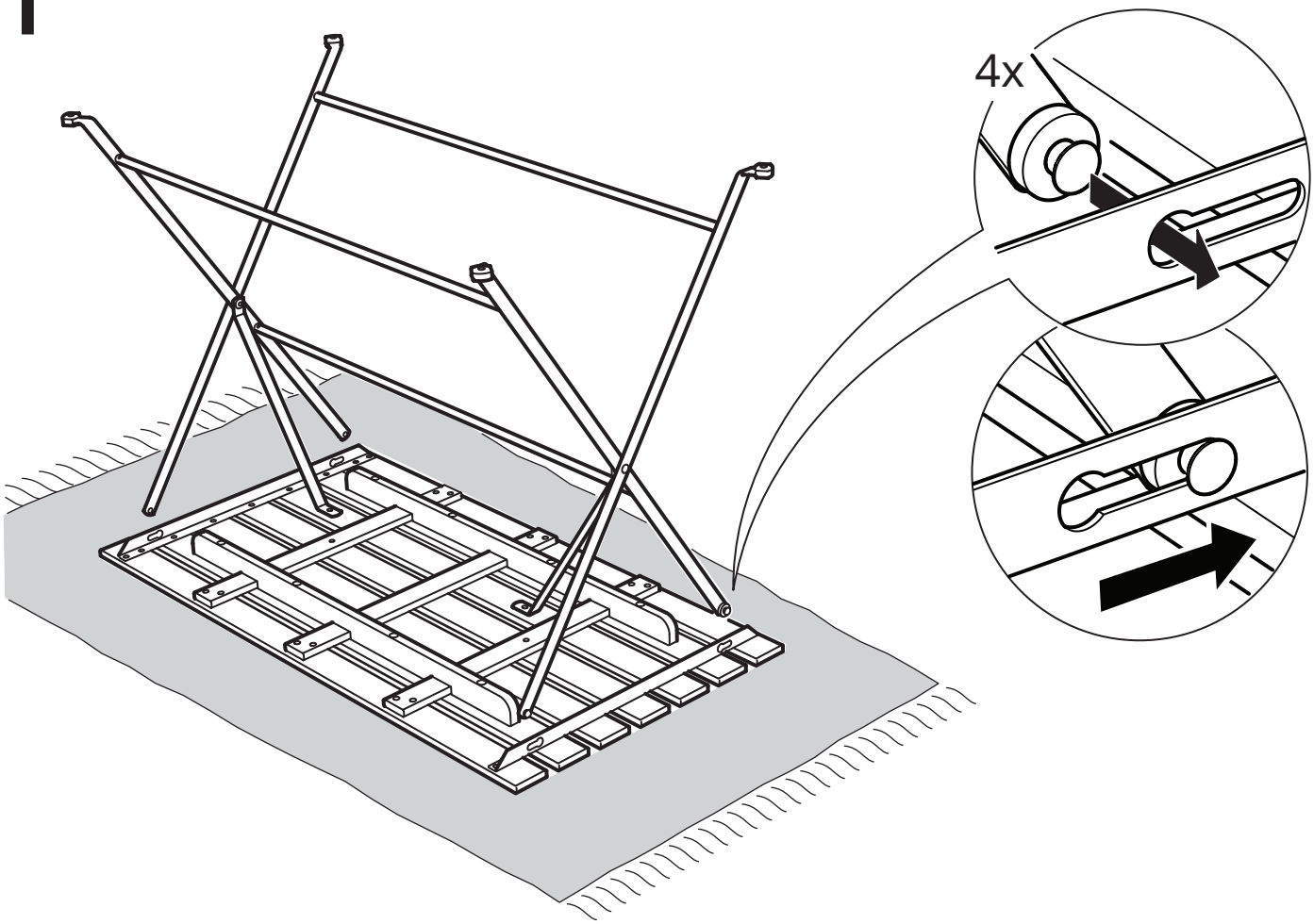

2

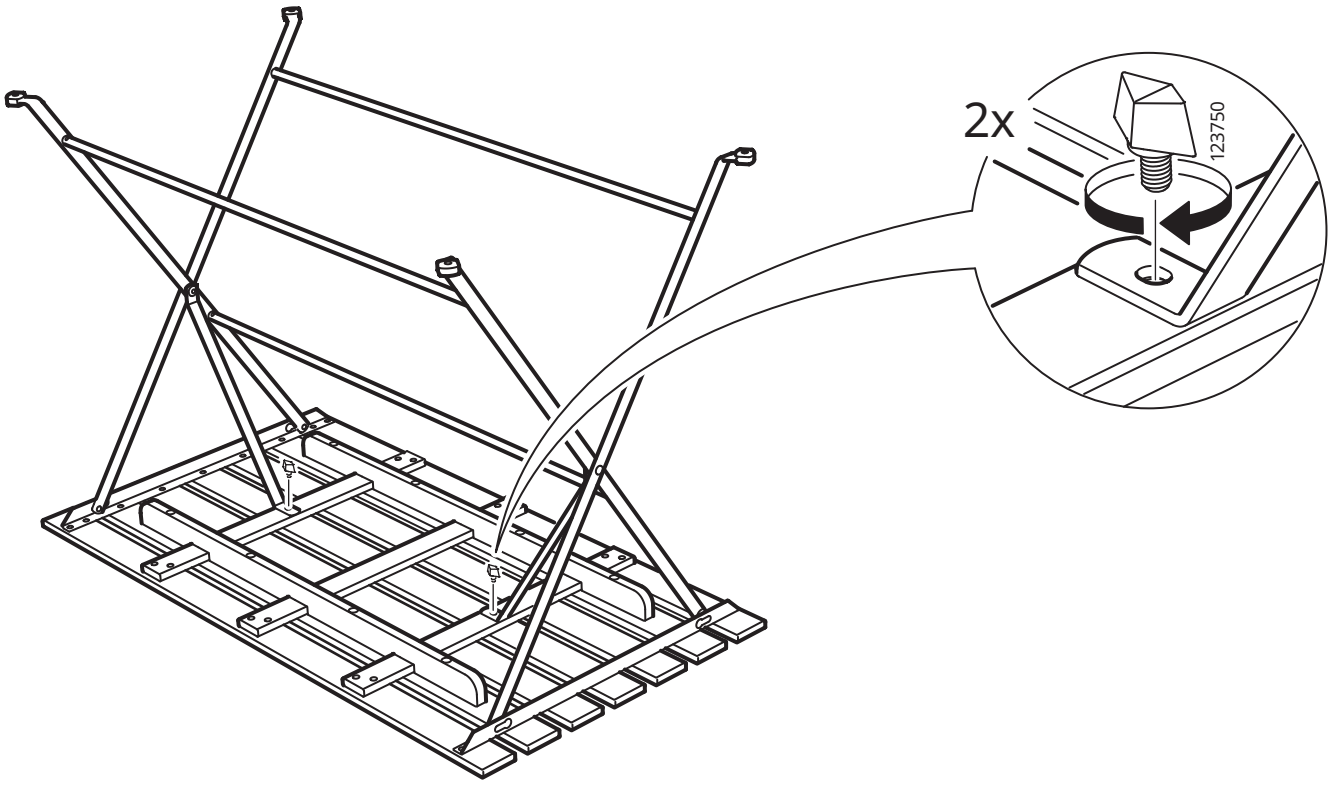

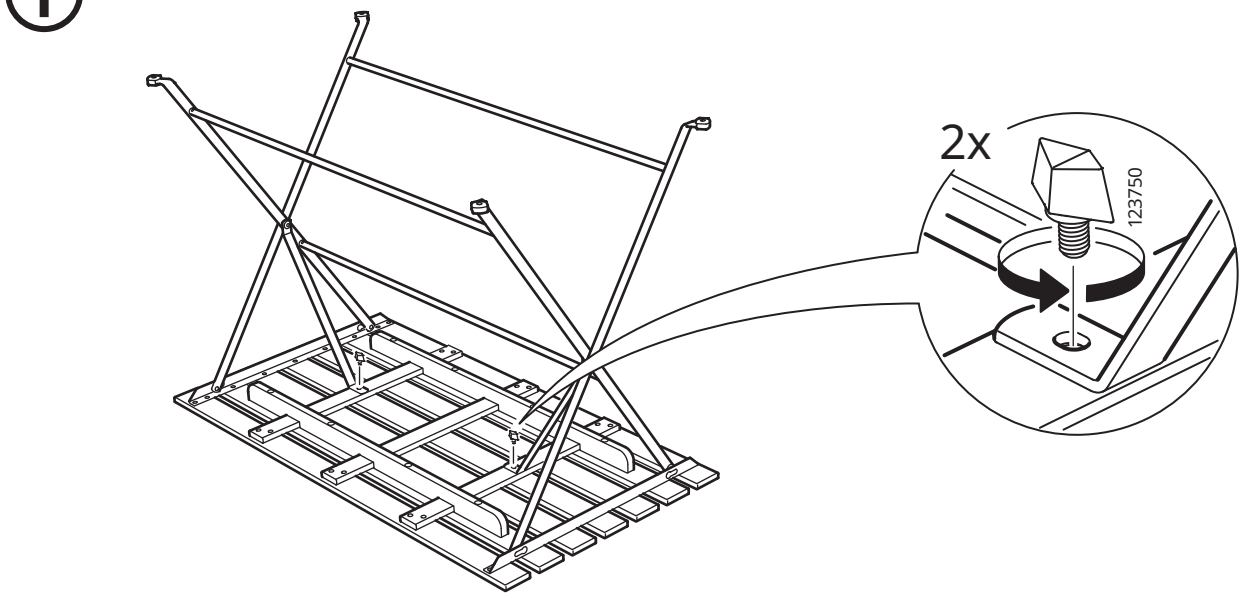

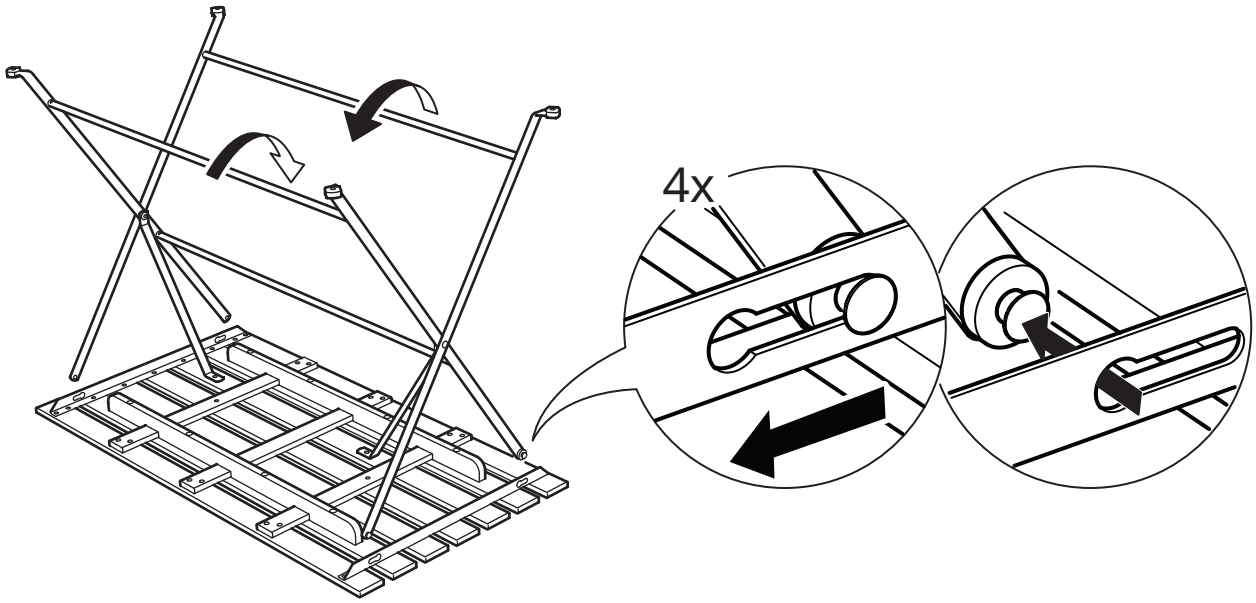

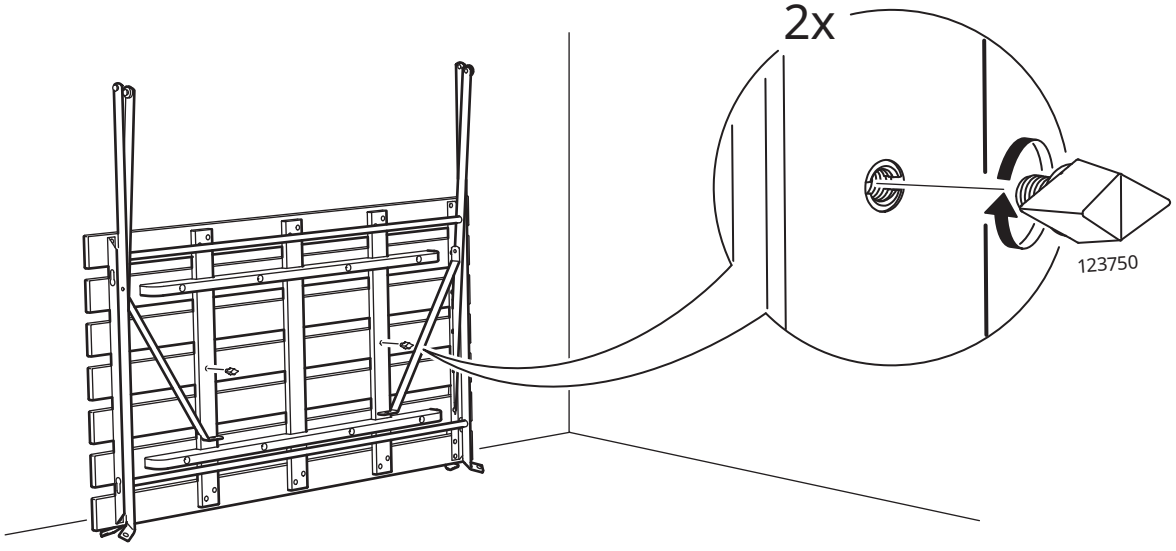

© Inter IKEA Systems B.V. 2019