SMÅSTAD

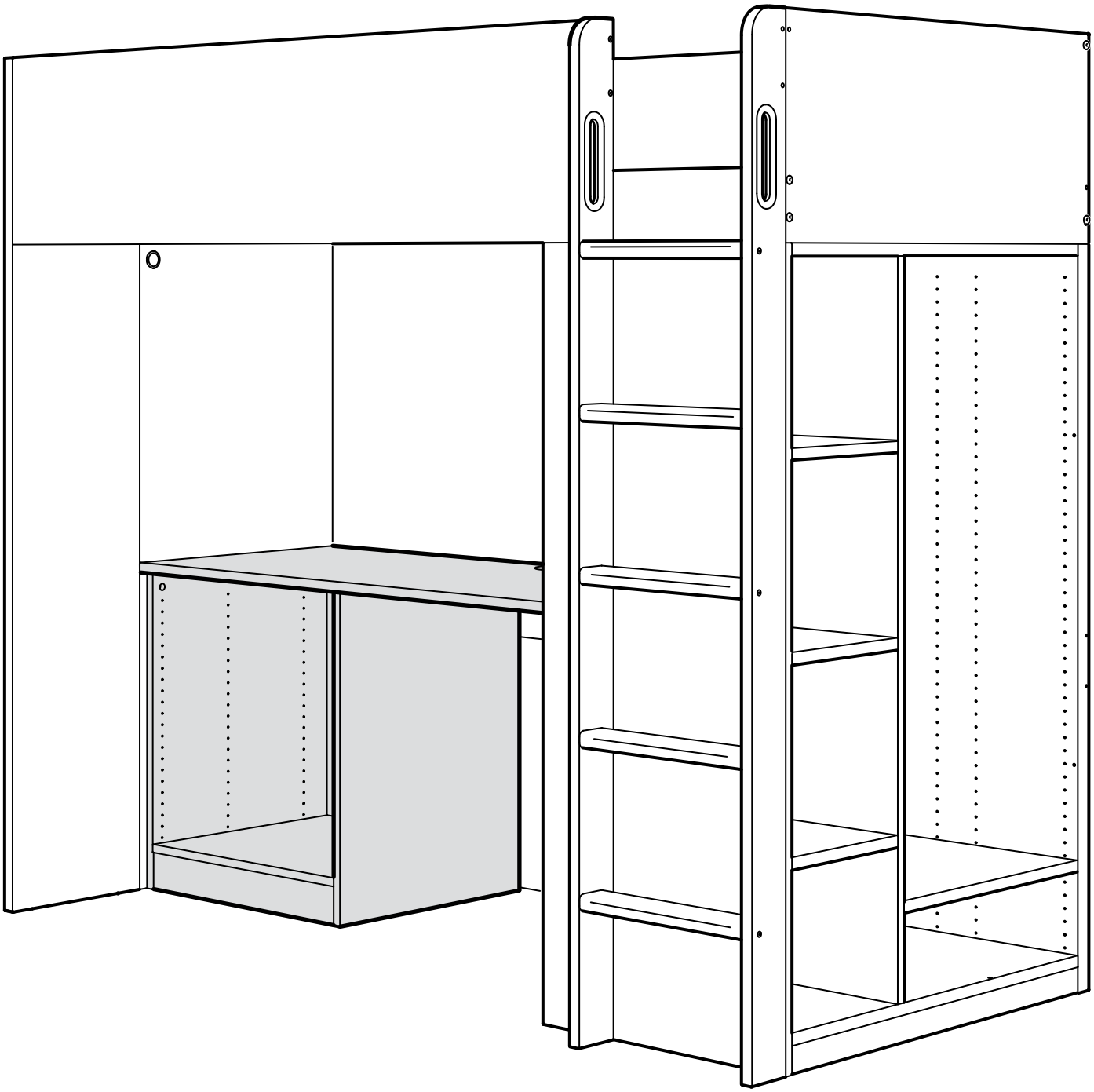

Design and Quality
IKEA of Sweden

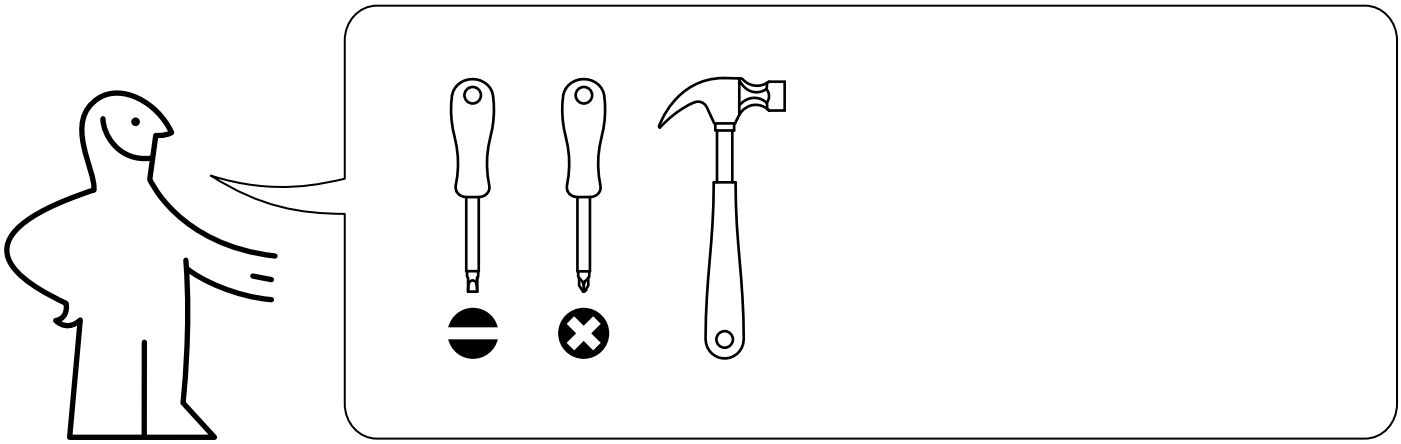

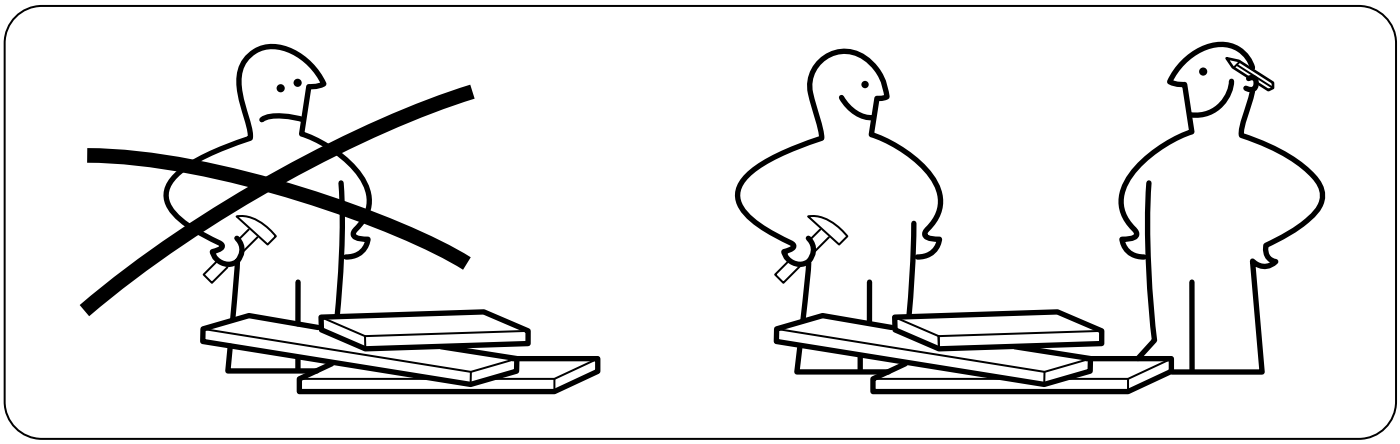

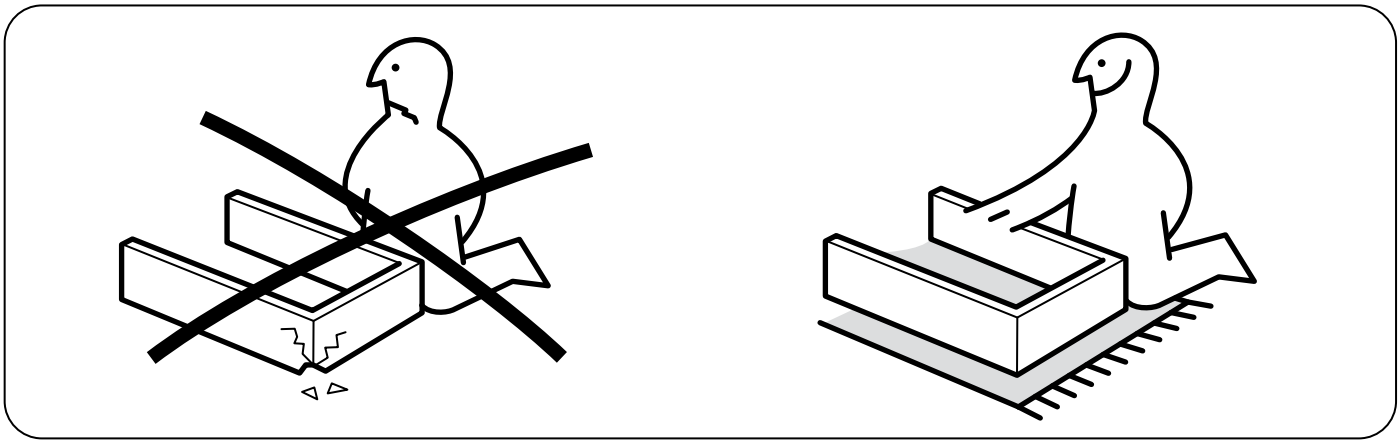

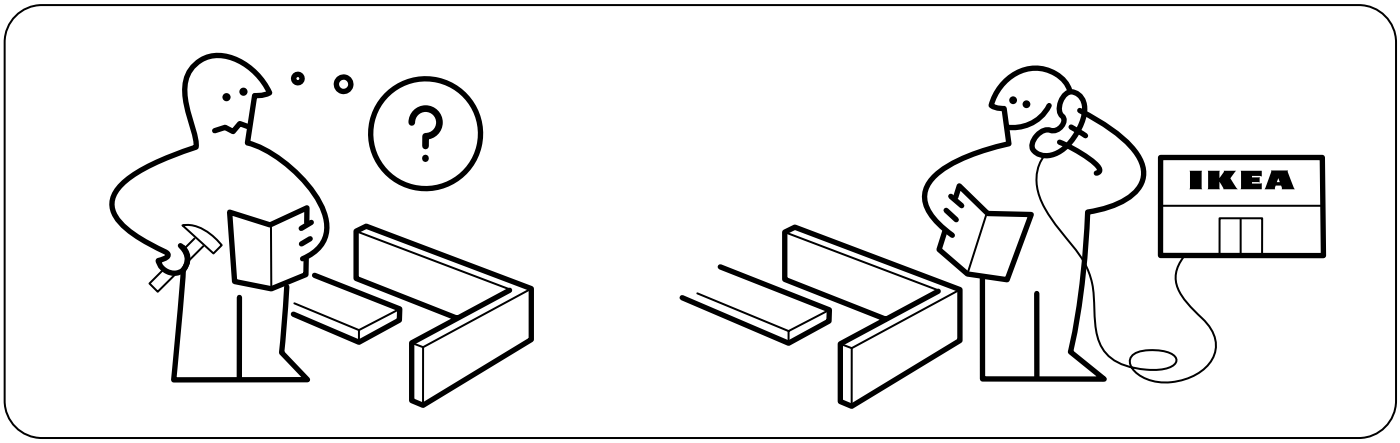

AA-2200883-3

4

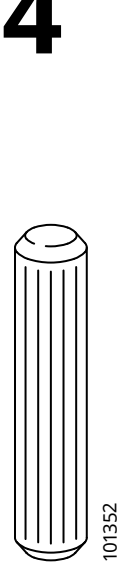

8x

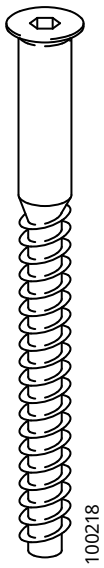

2x

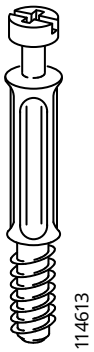

14x

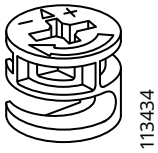

14x

20x

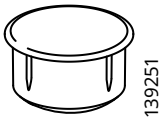

6x

10x

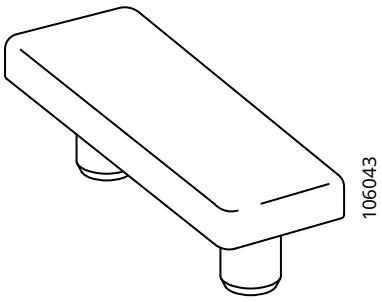

4x

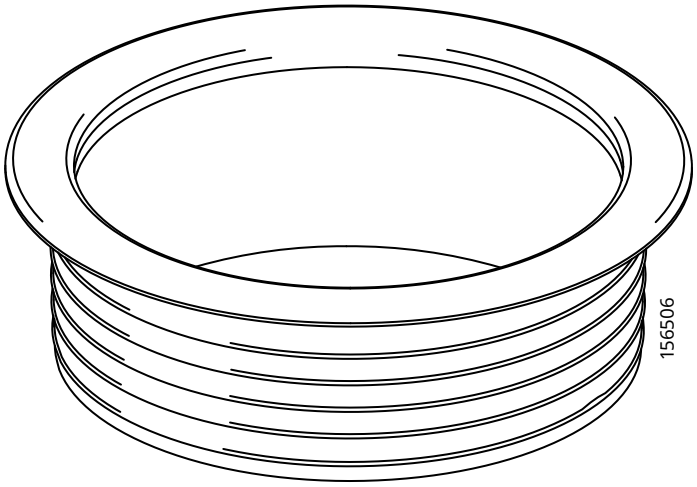

1x

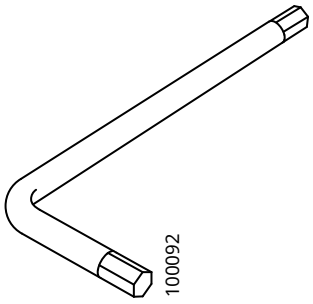

1x

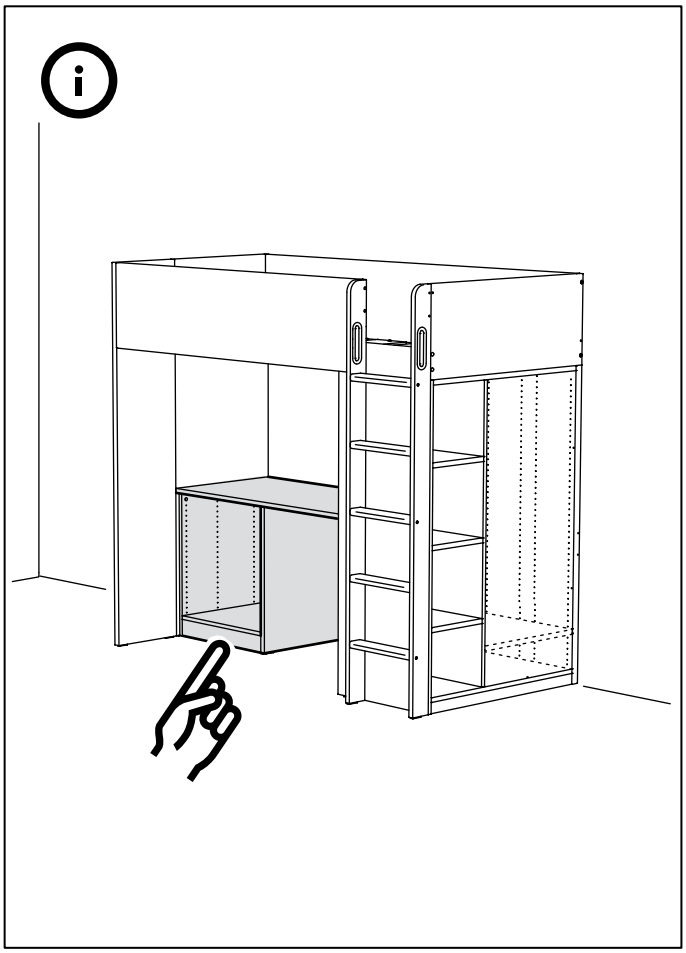

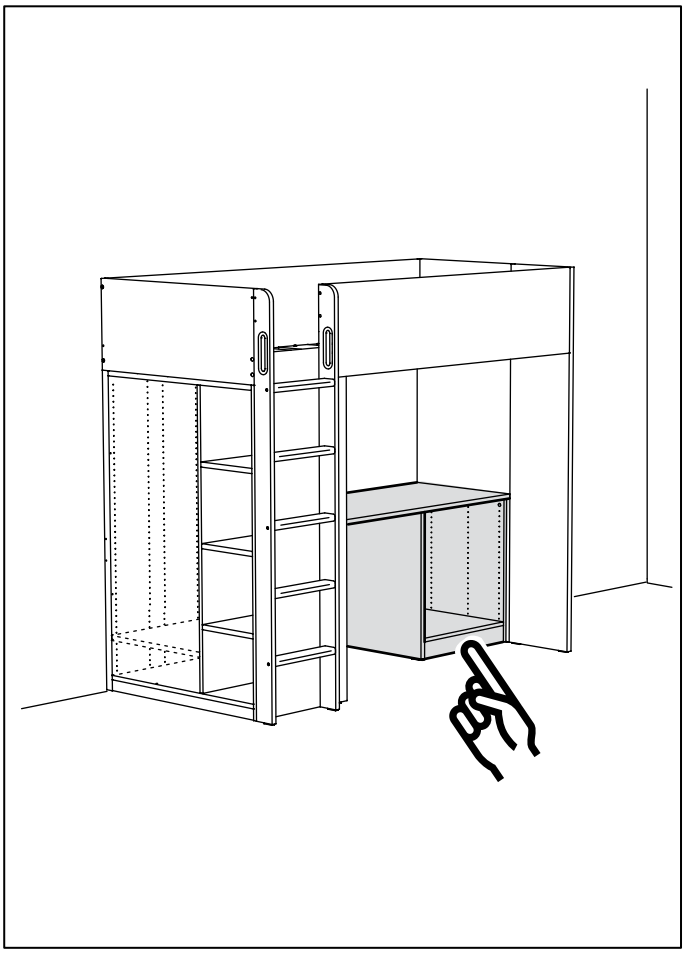

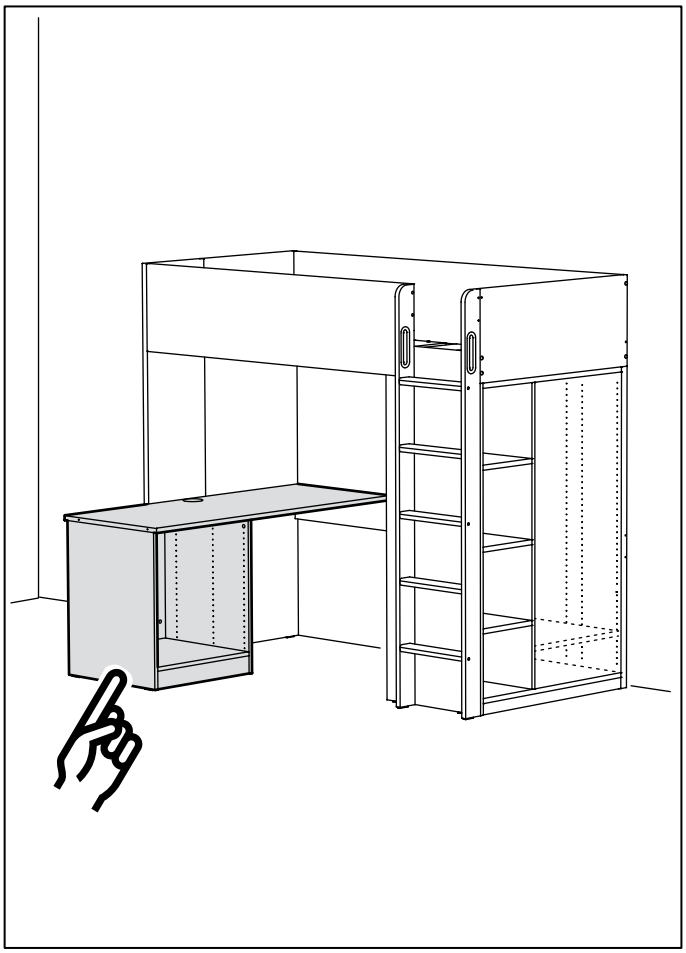

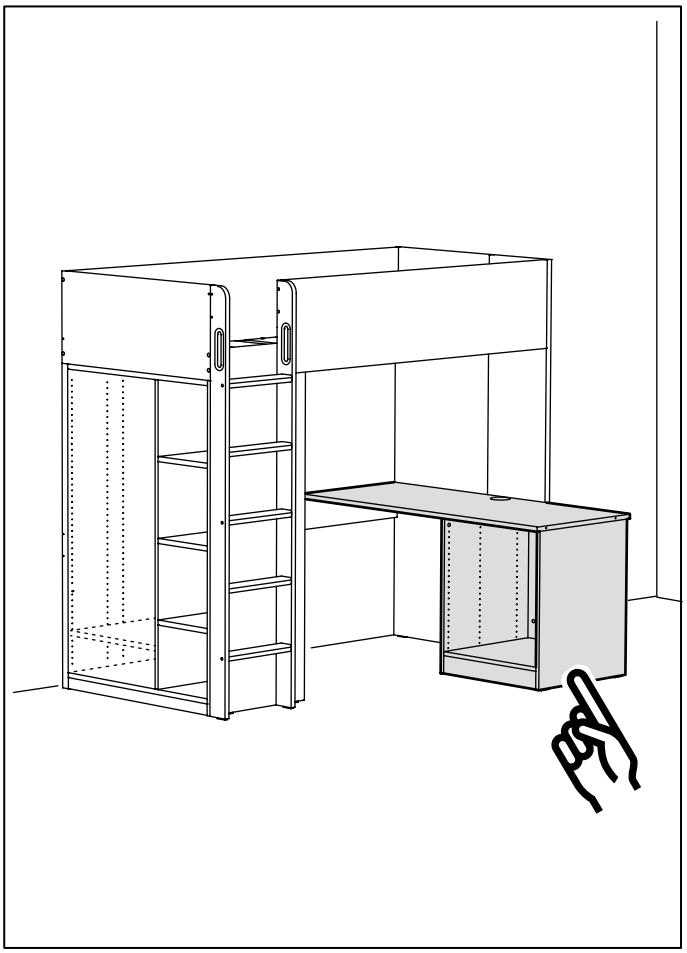

1

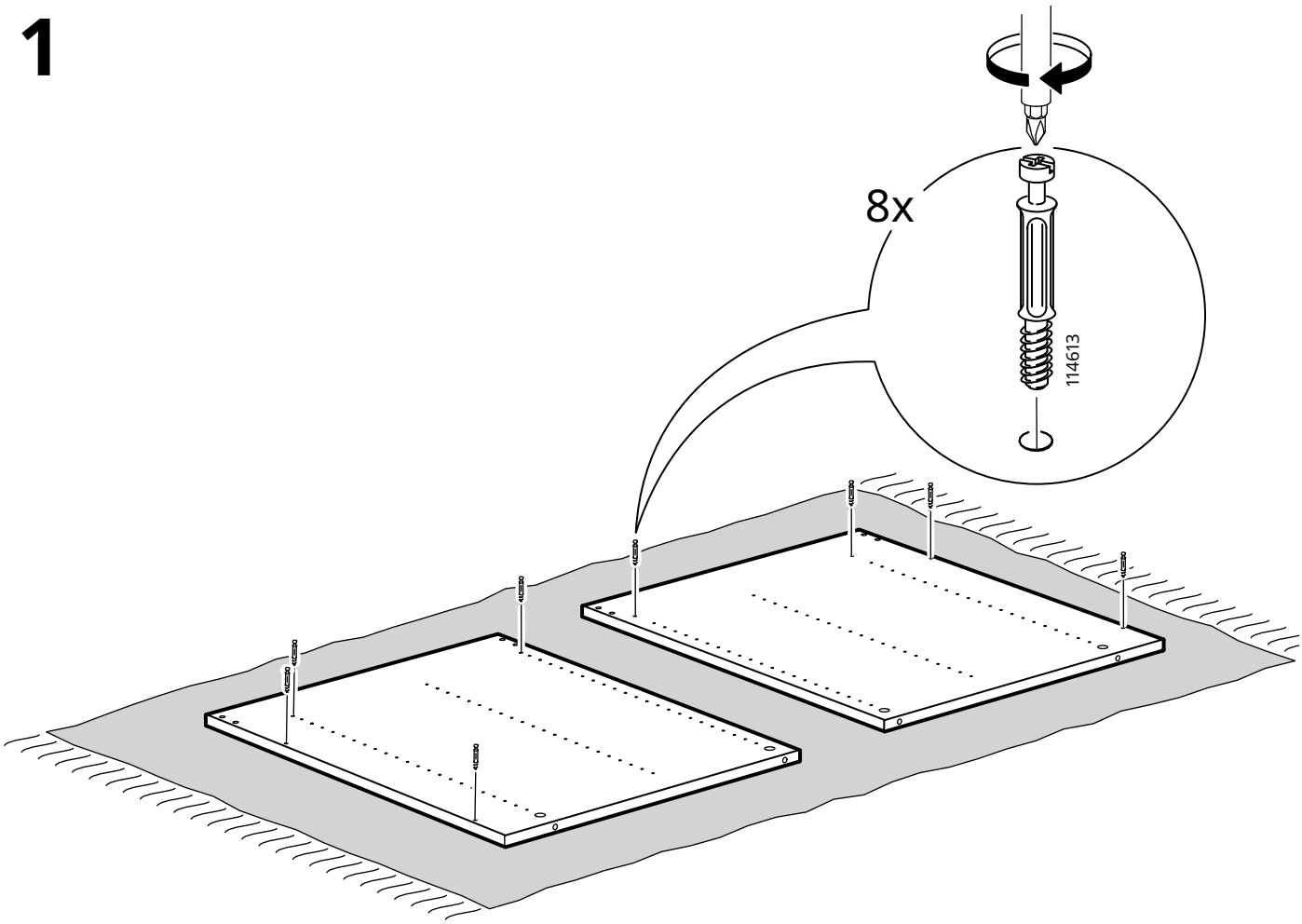

2

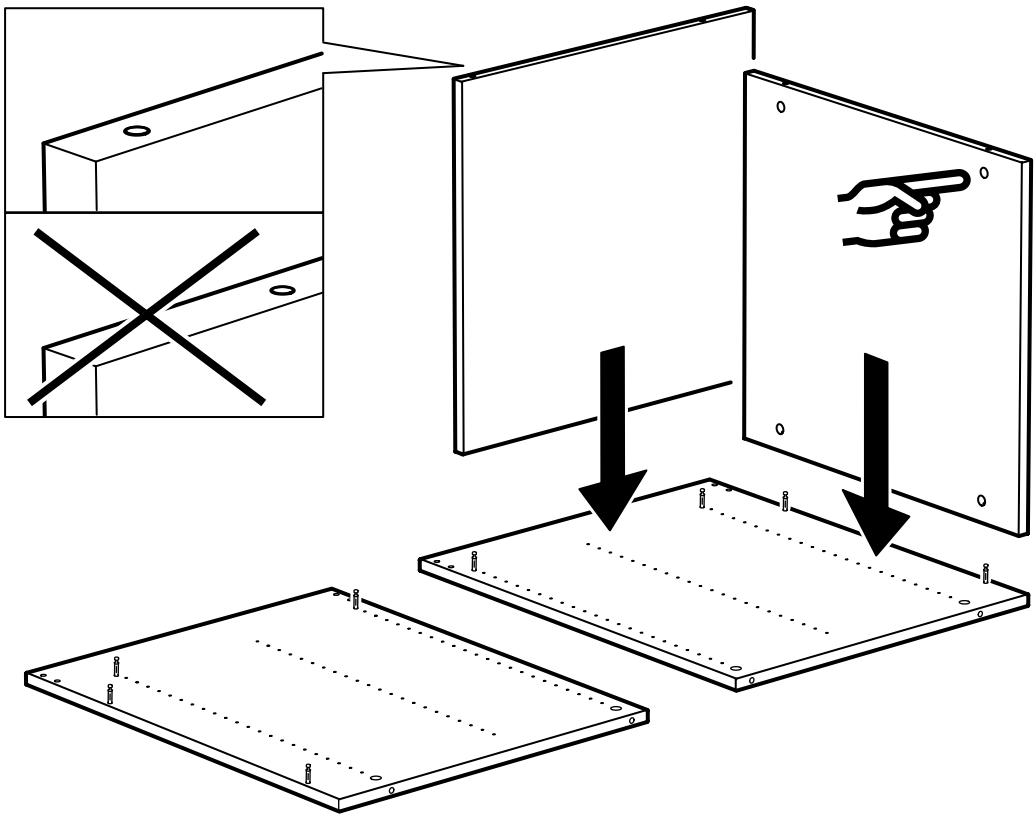

3

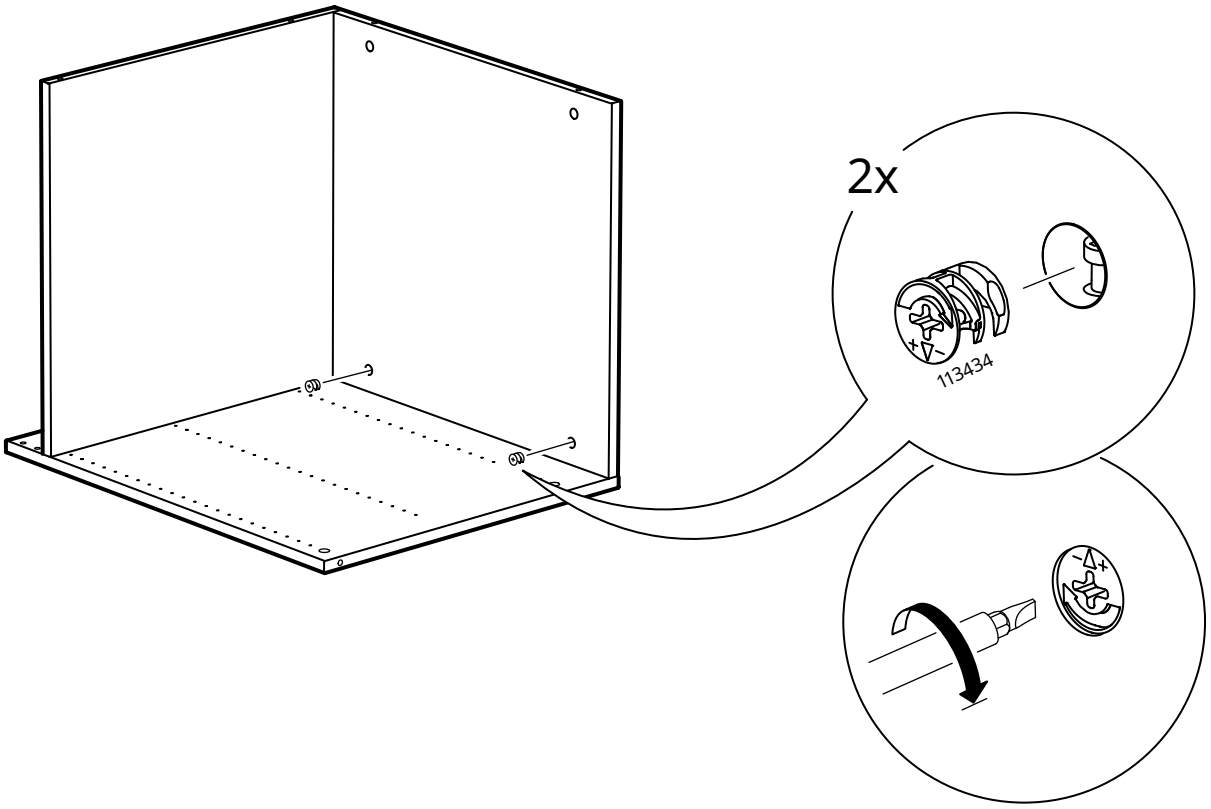

4

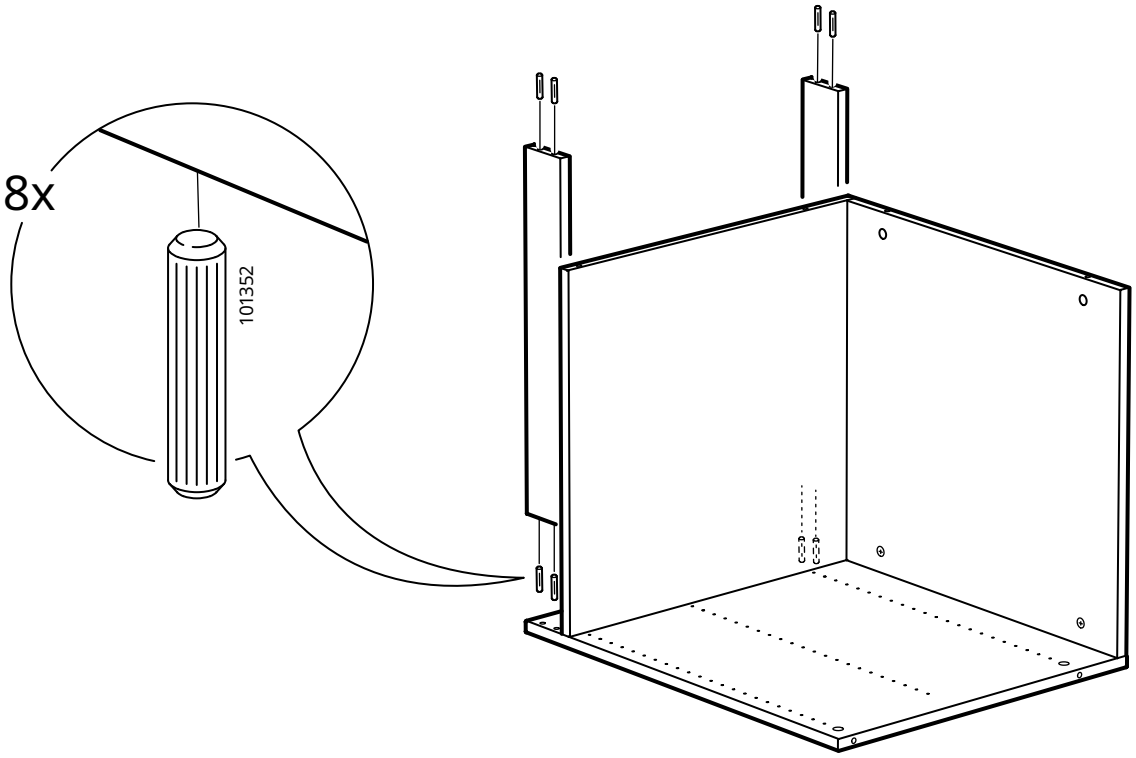

5

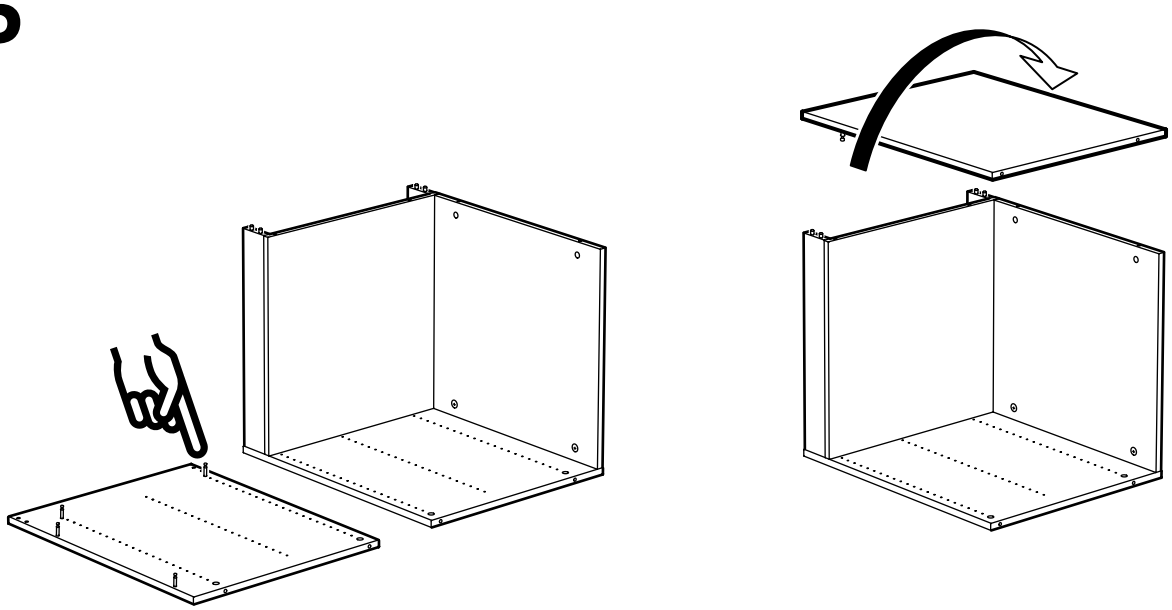

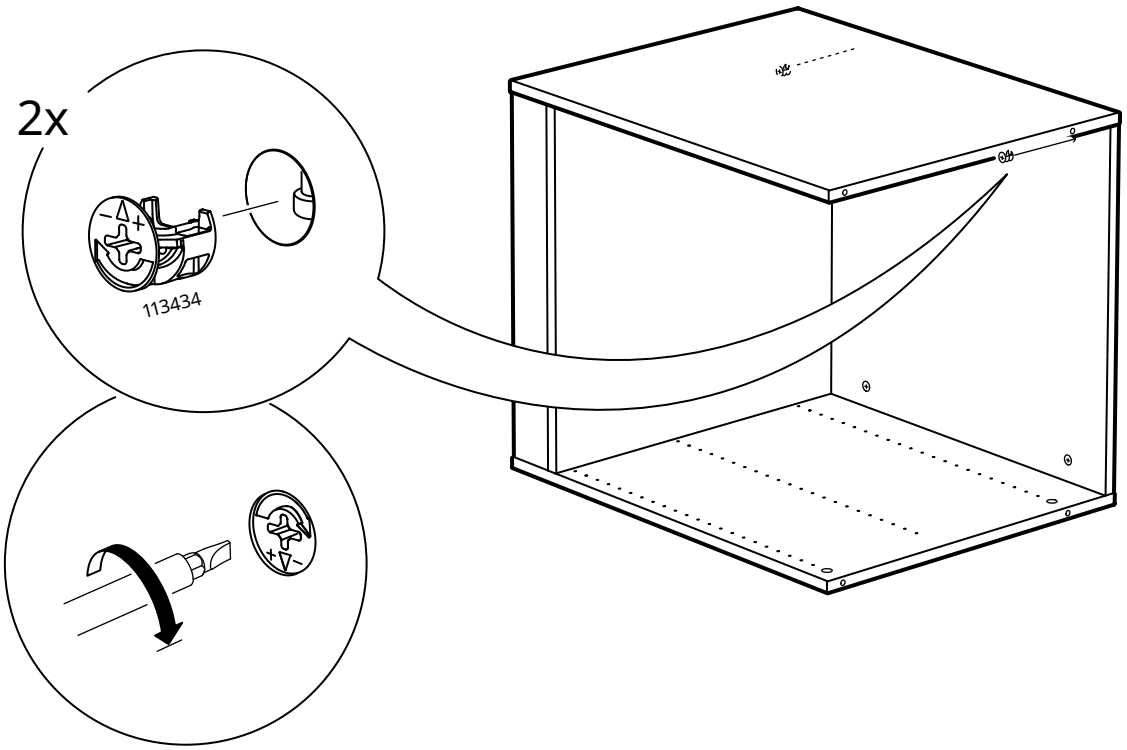

6

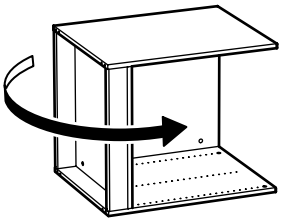

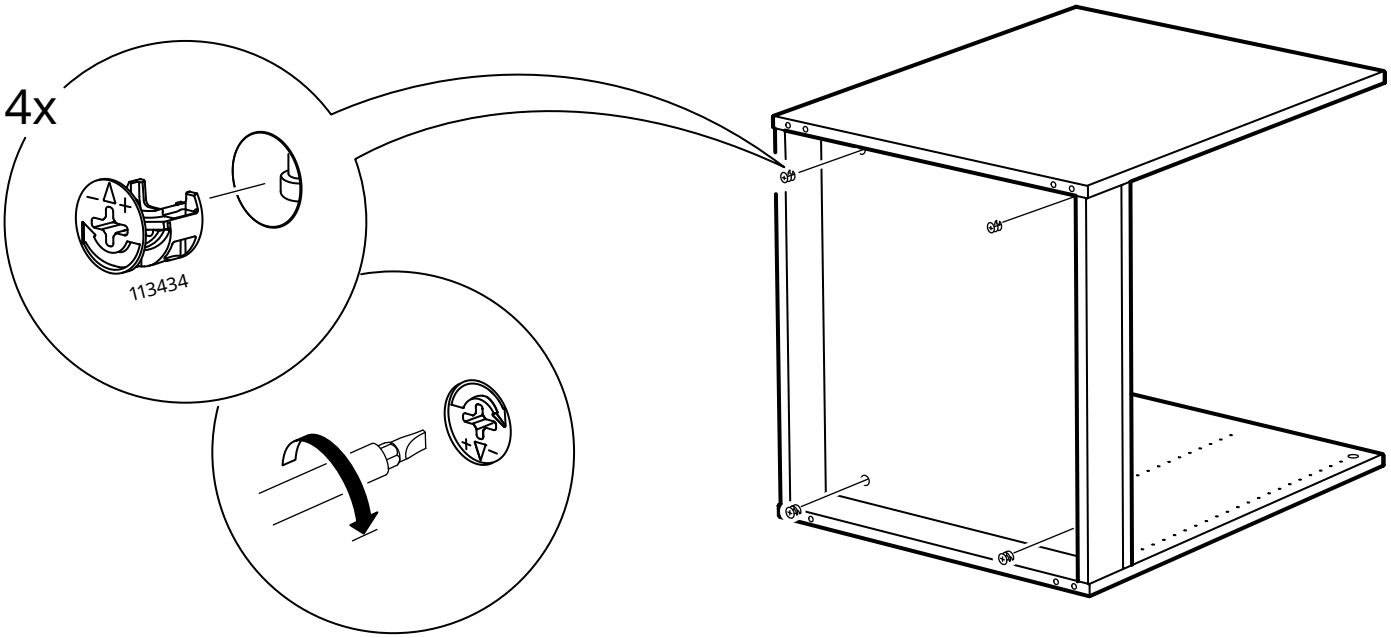

7

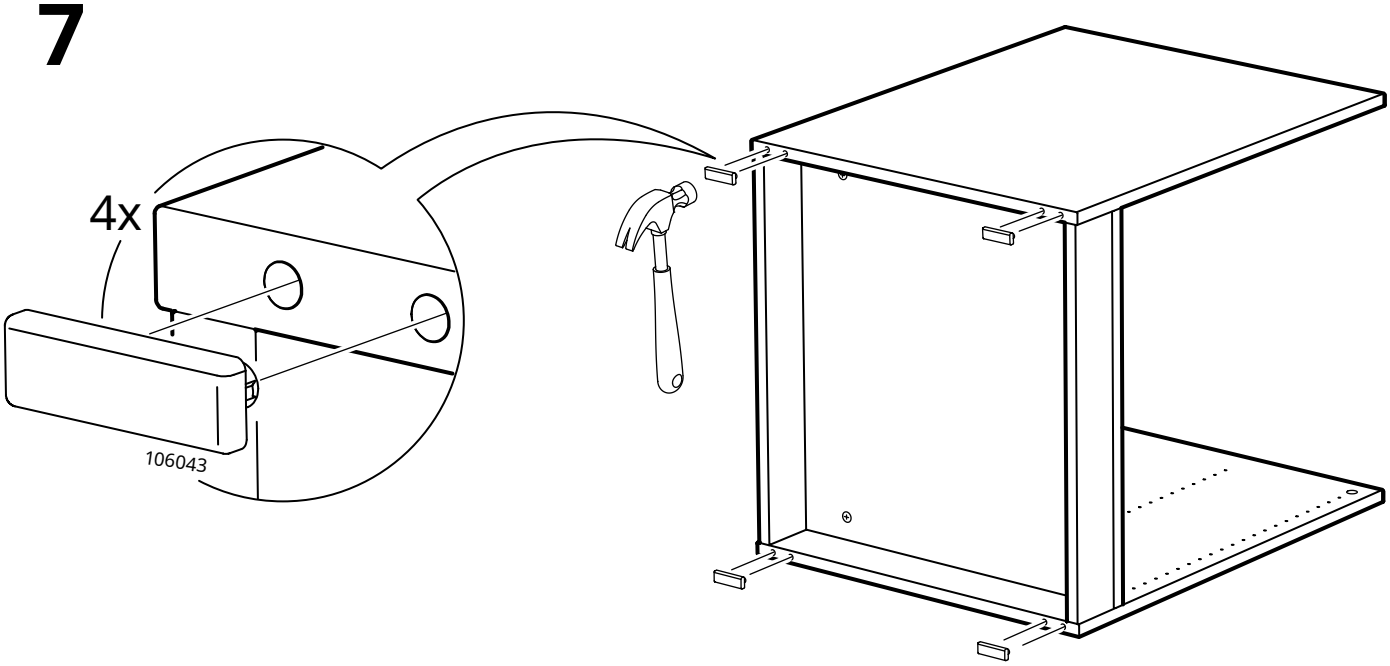

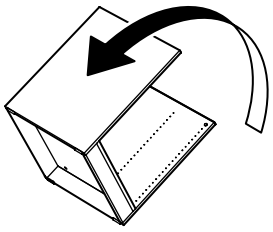

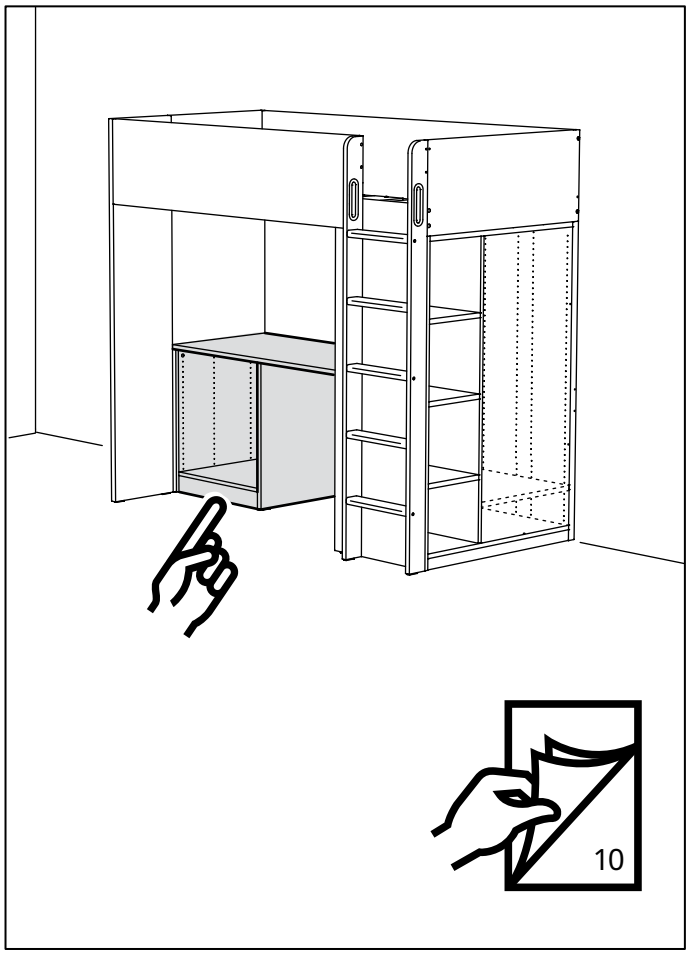
10

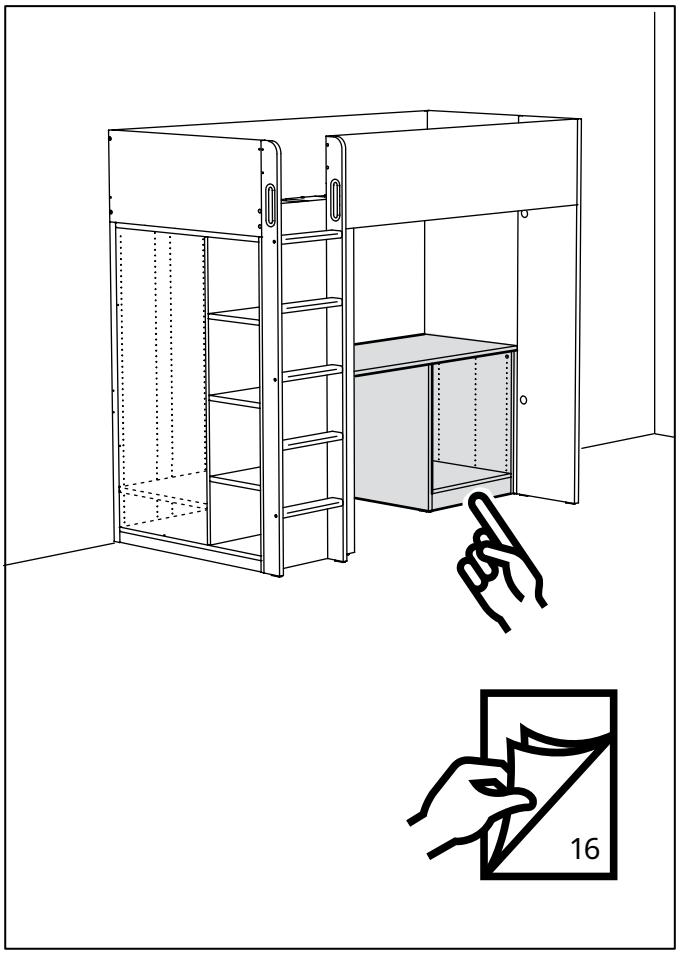
16

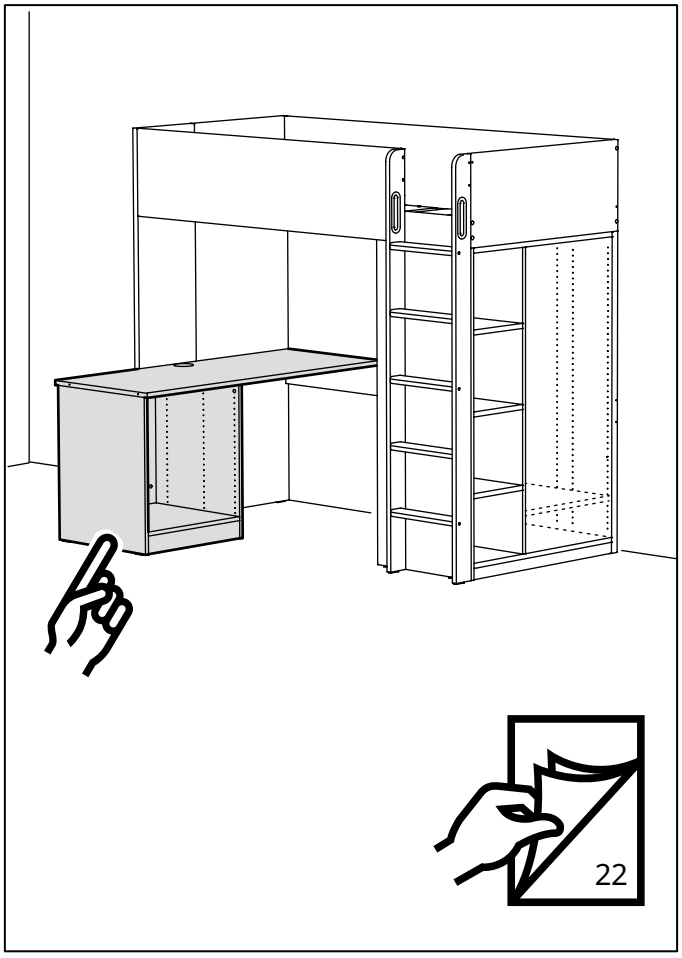
22

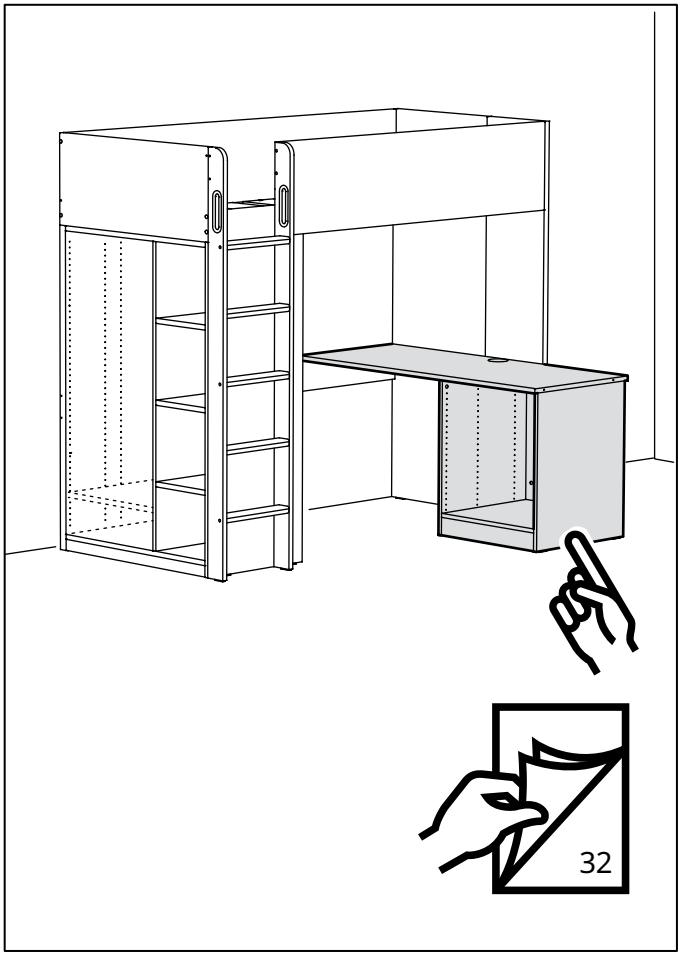
32

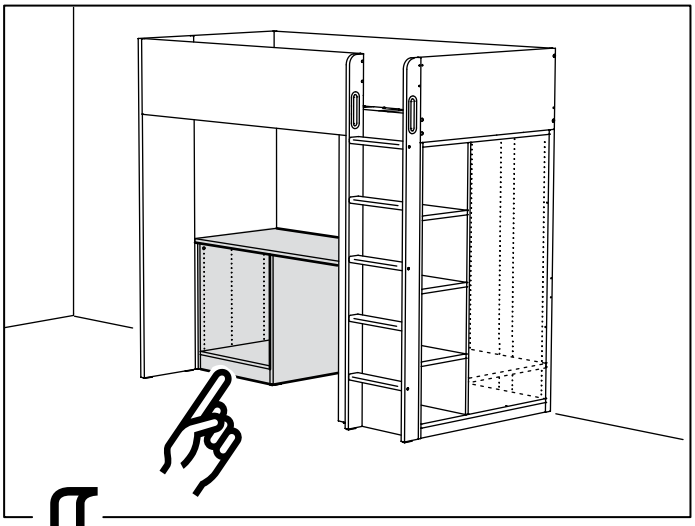

8

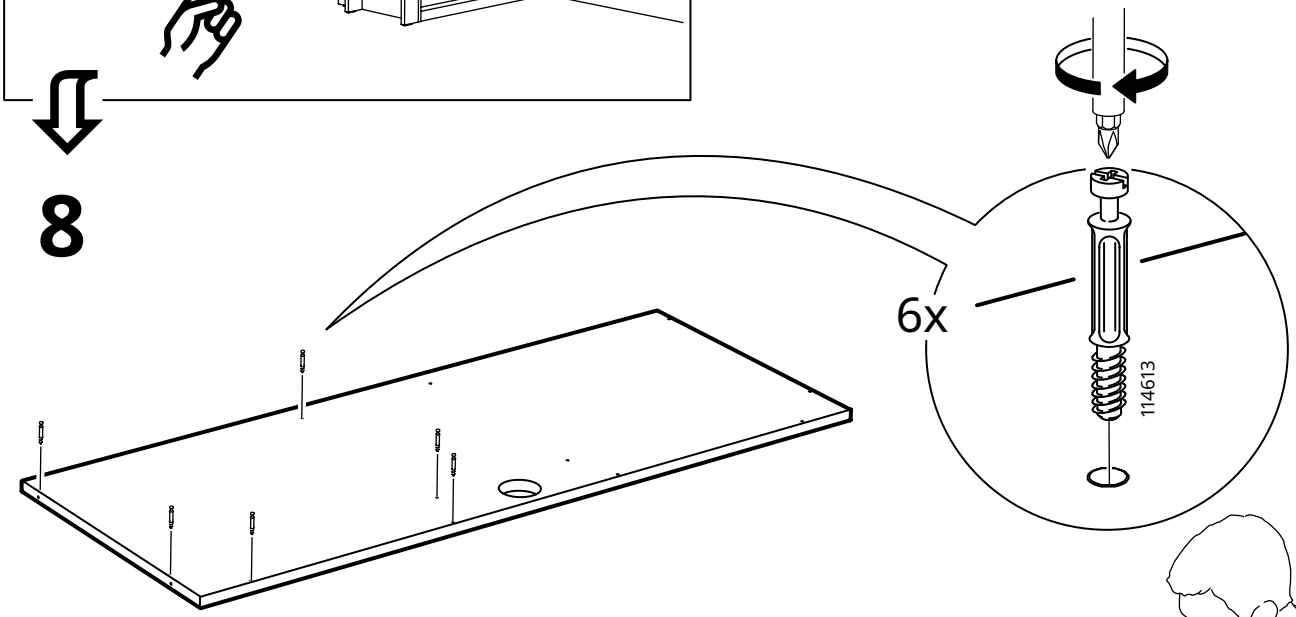

9

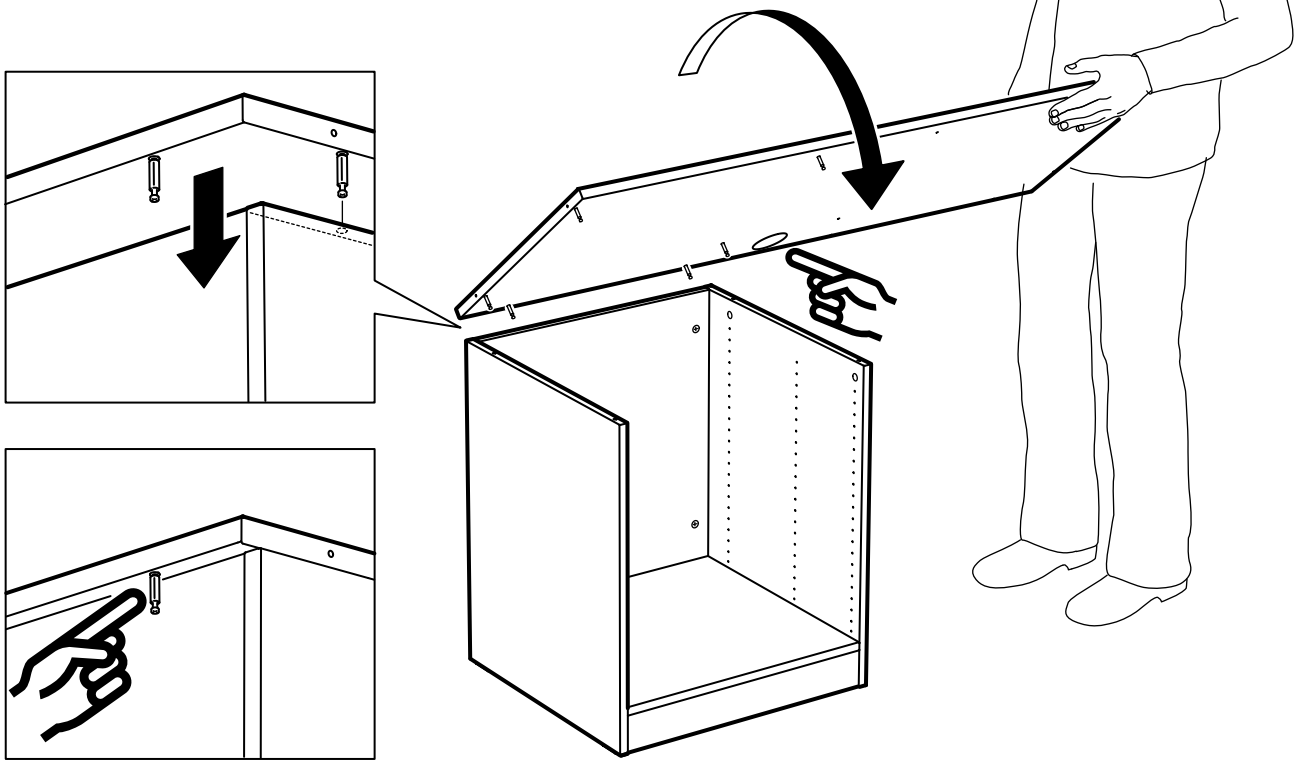

10

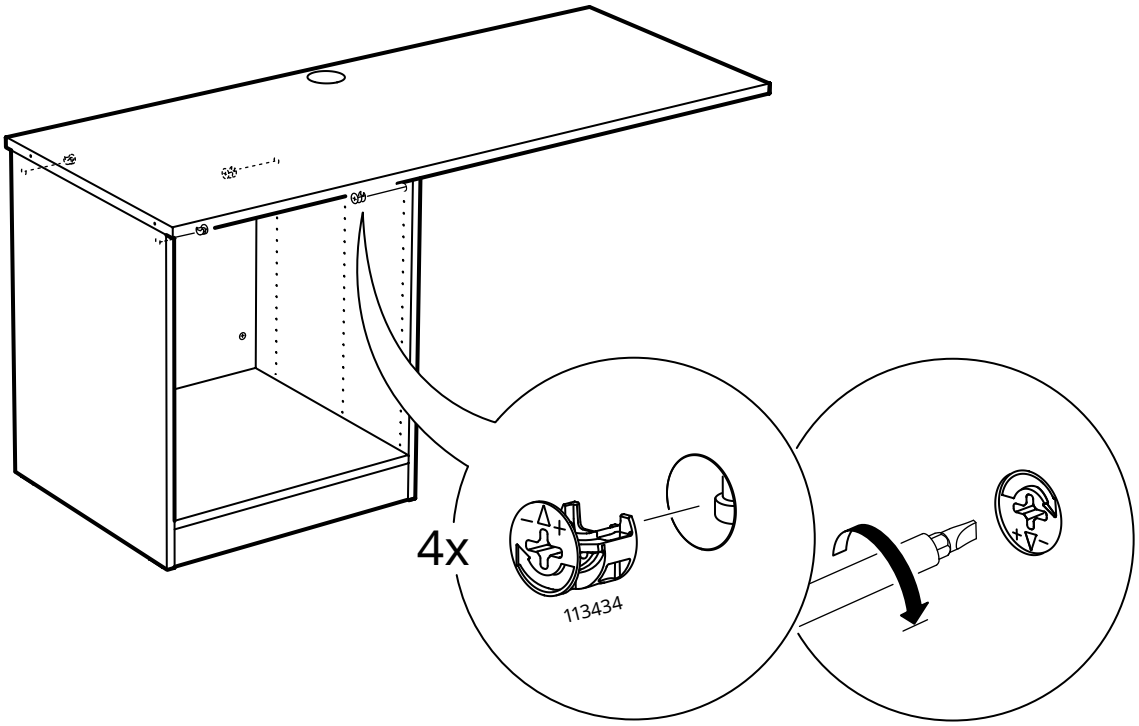

11

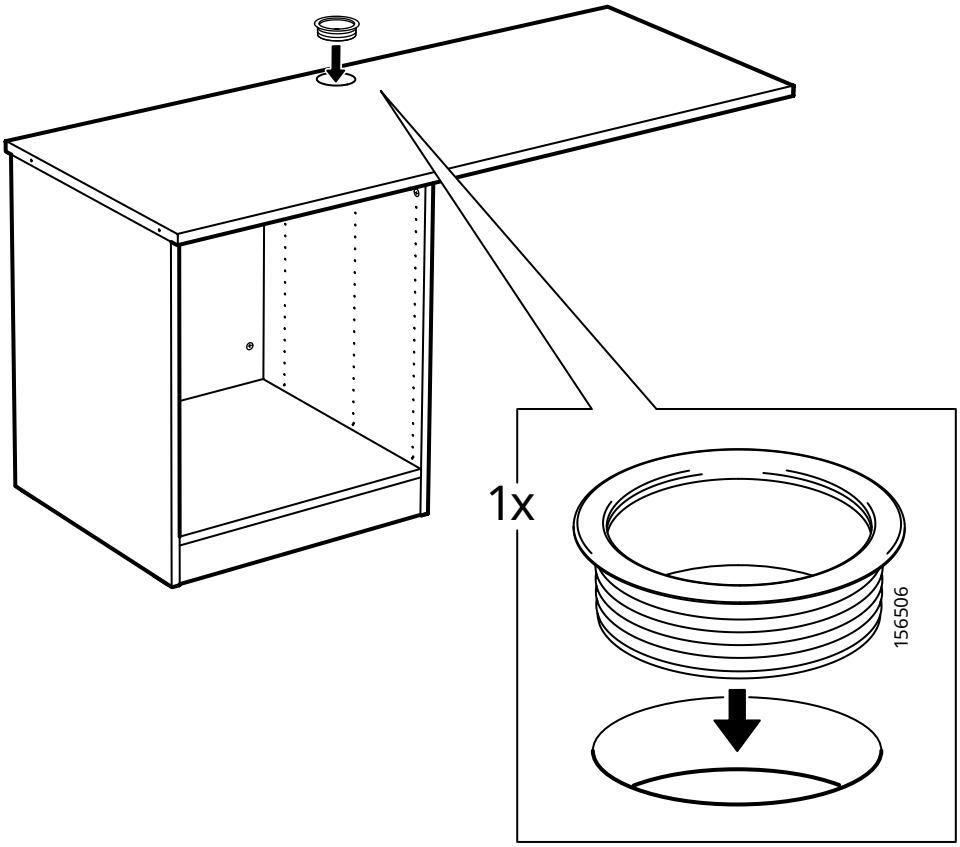

12

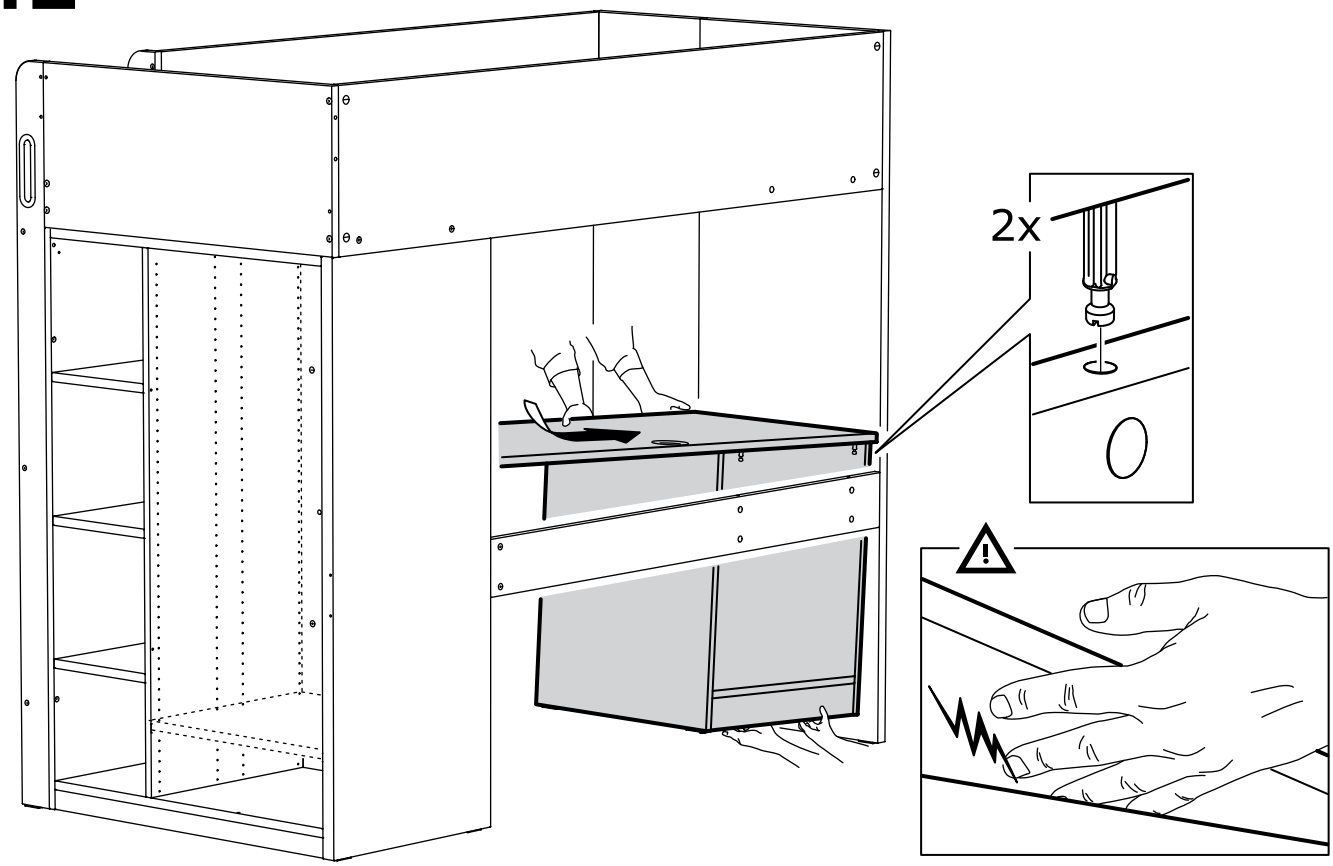

13

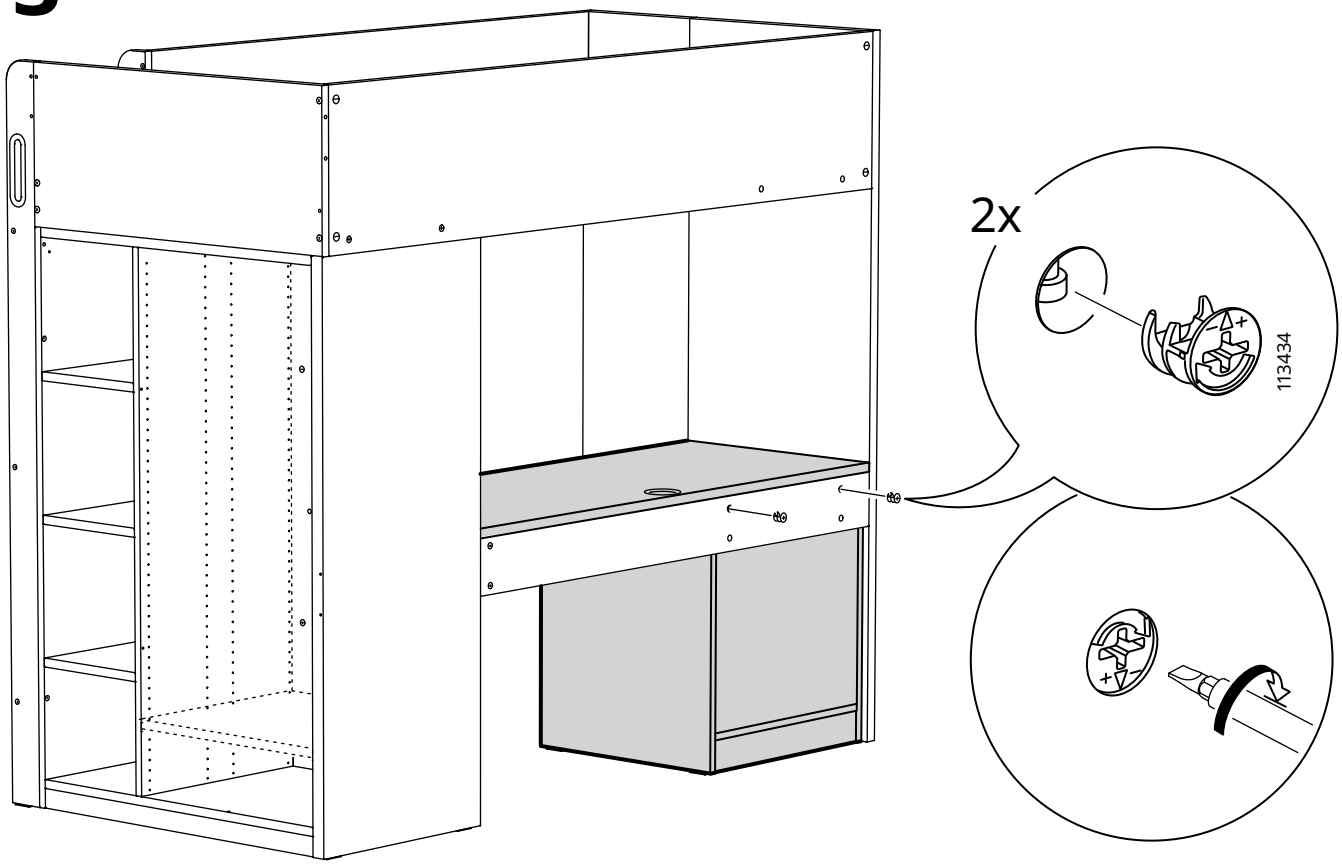

14

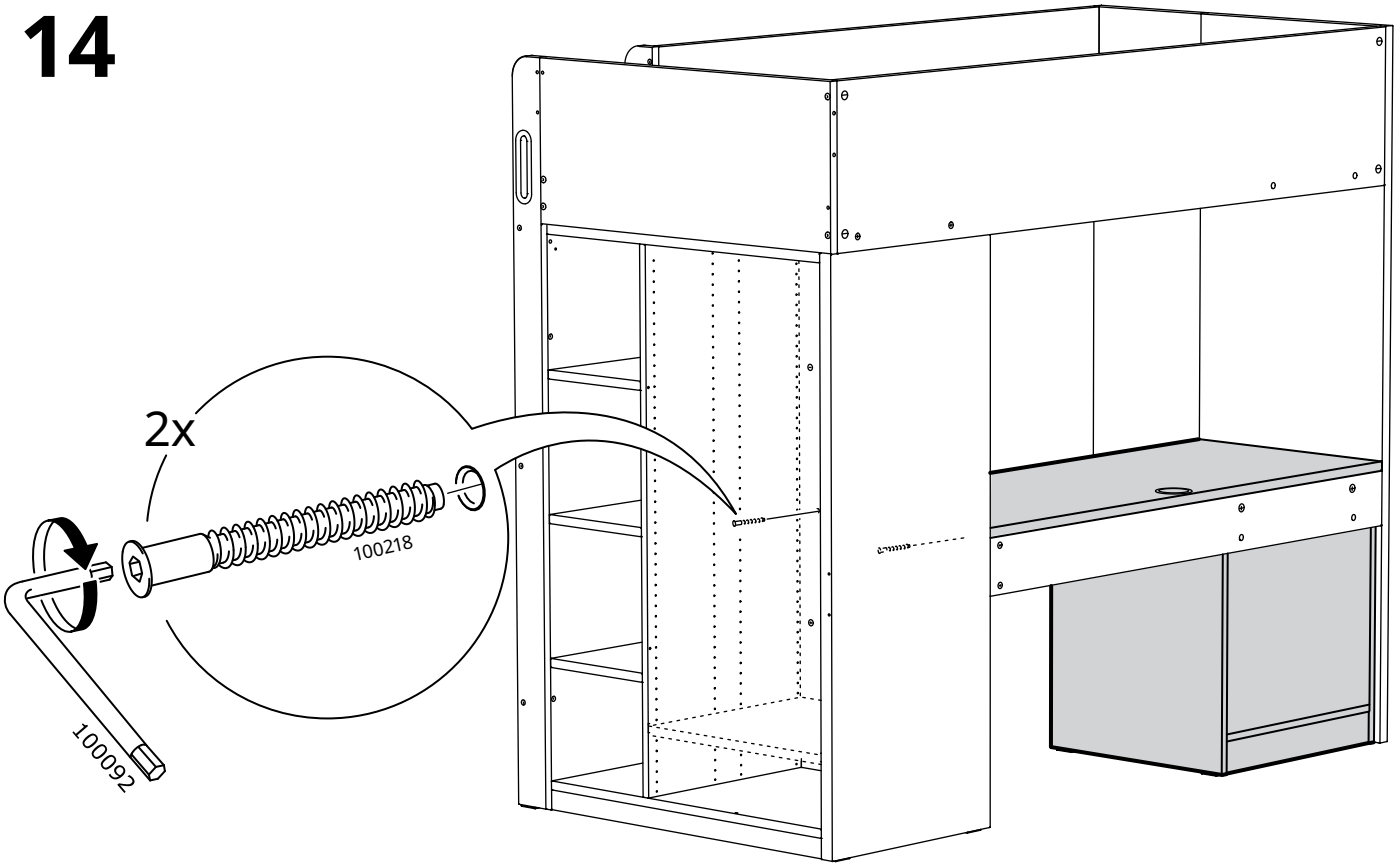

15

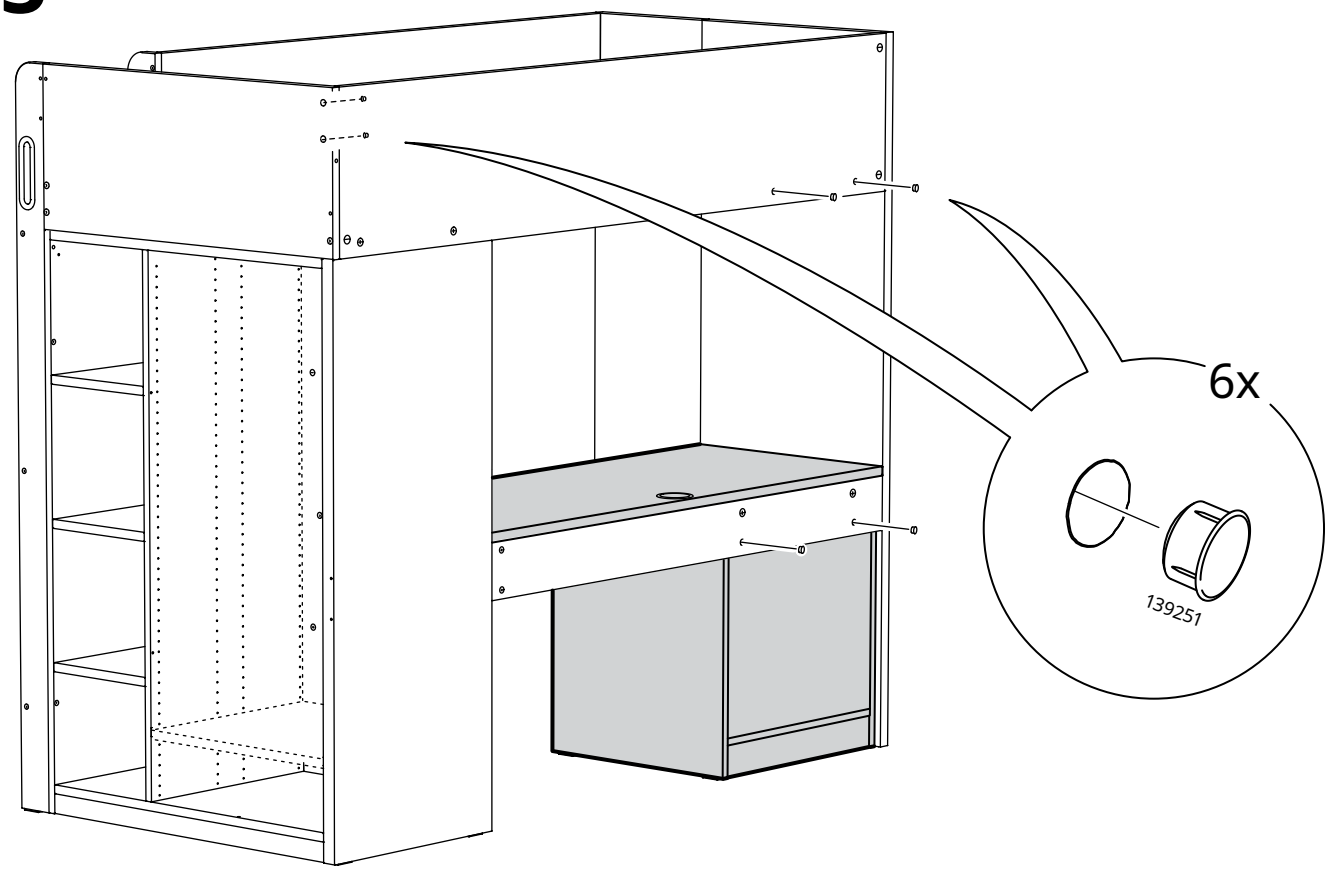

16

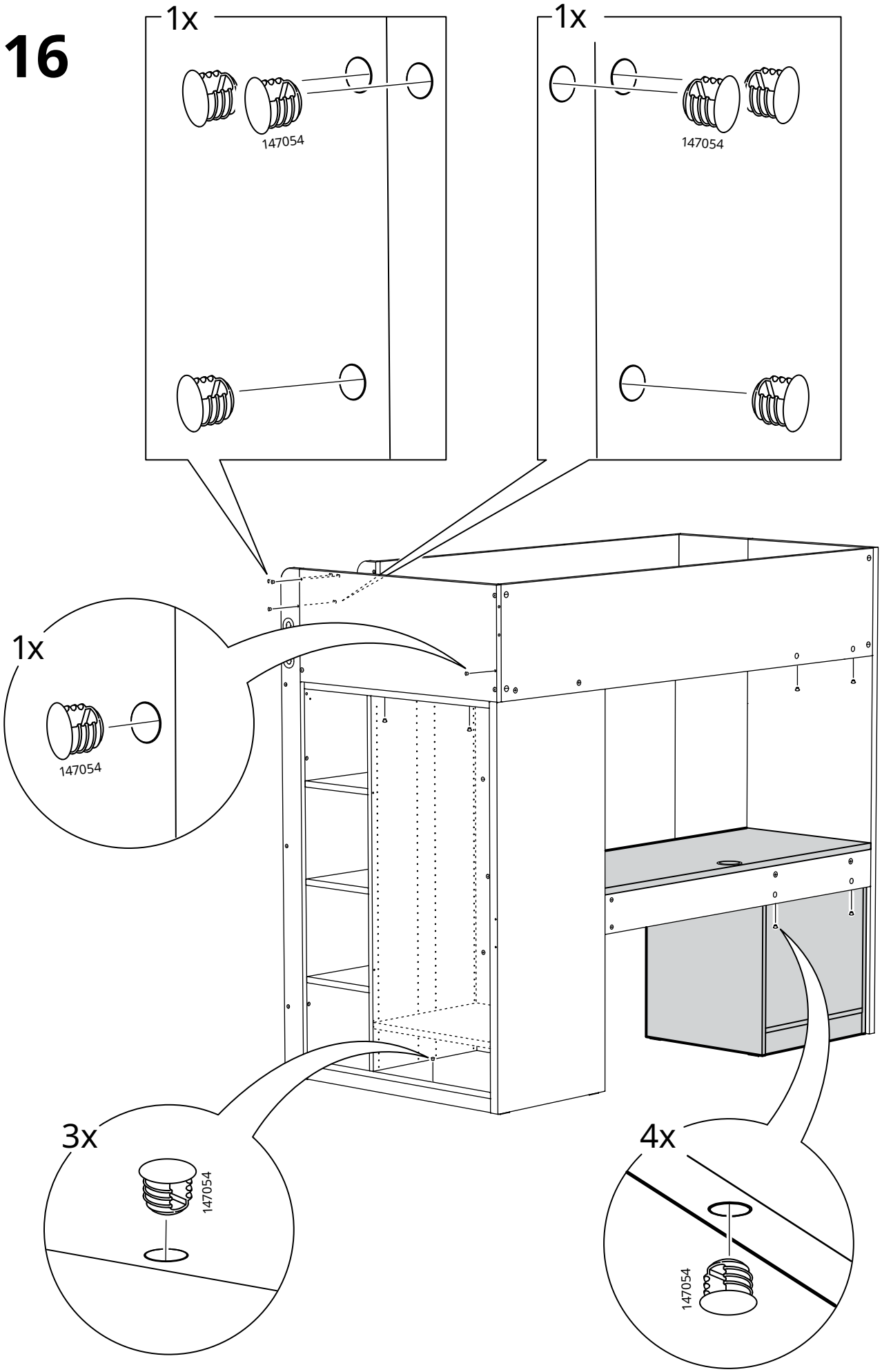

17

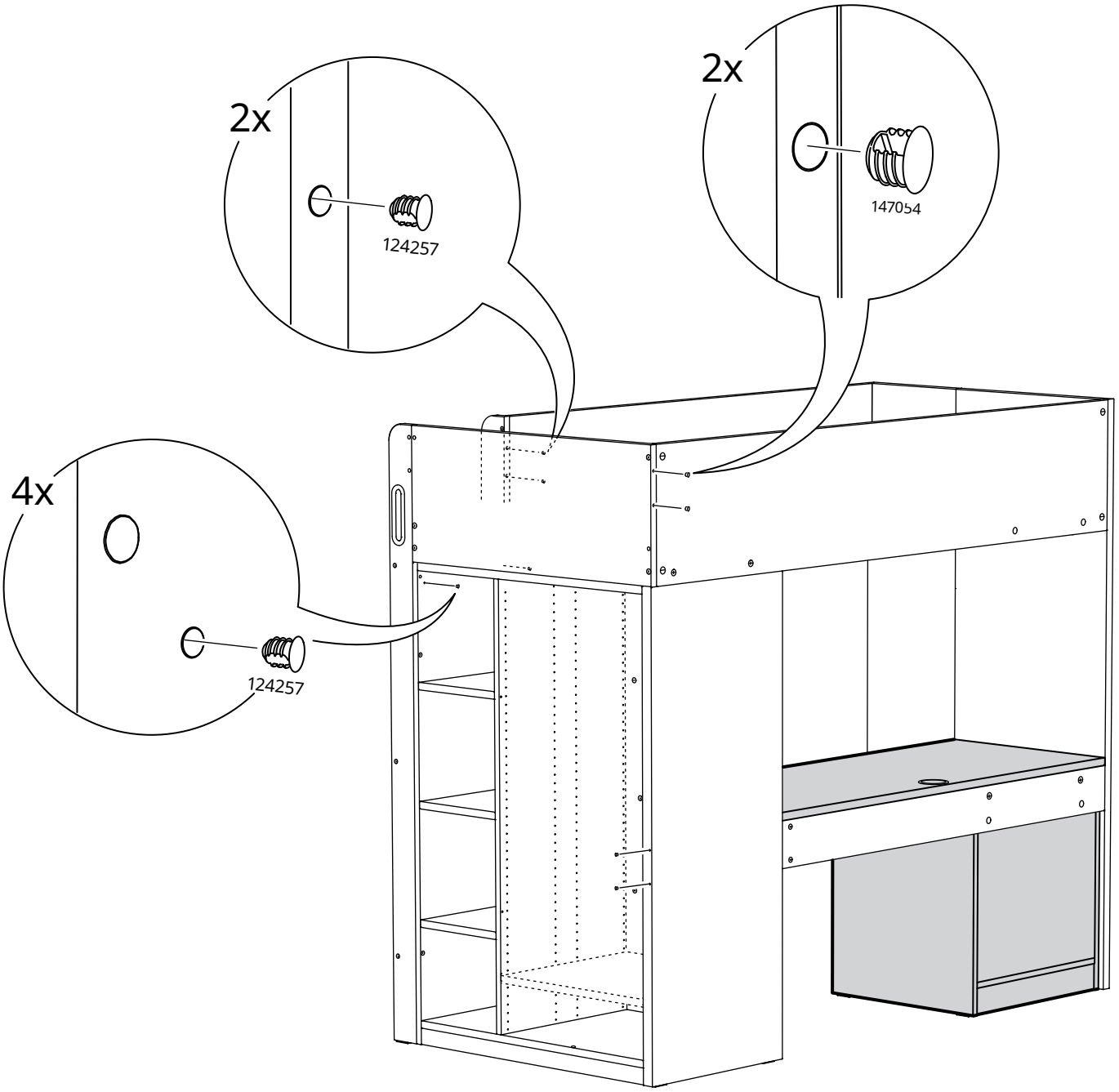

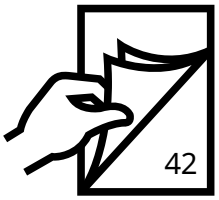

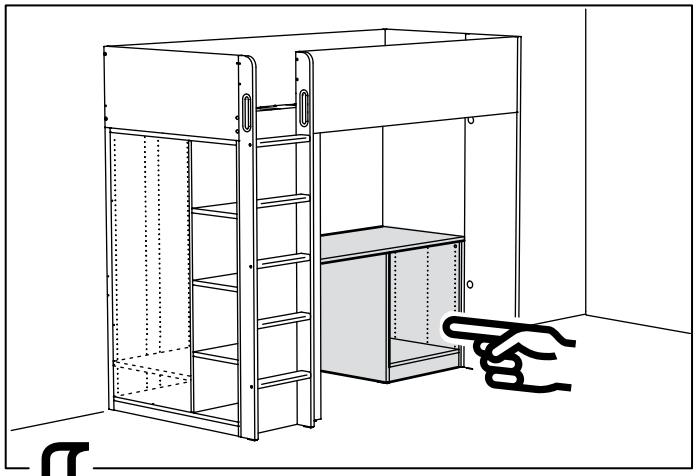

8

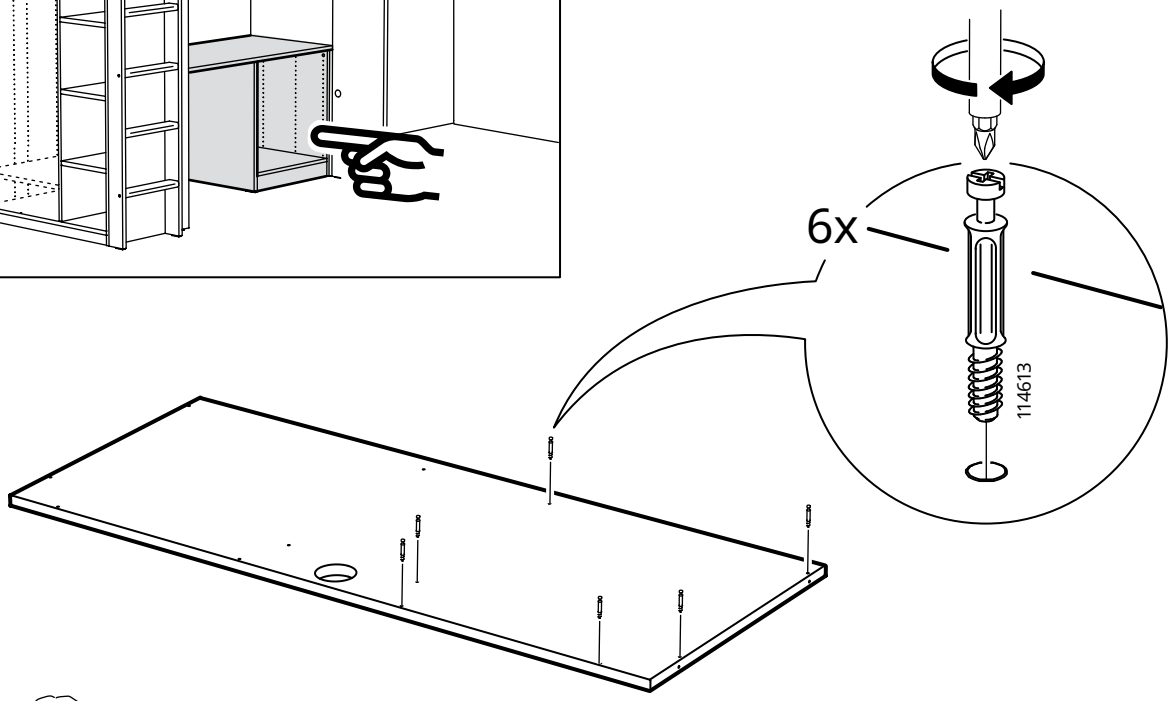

9

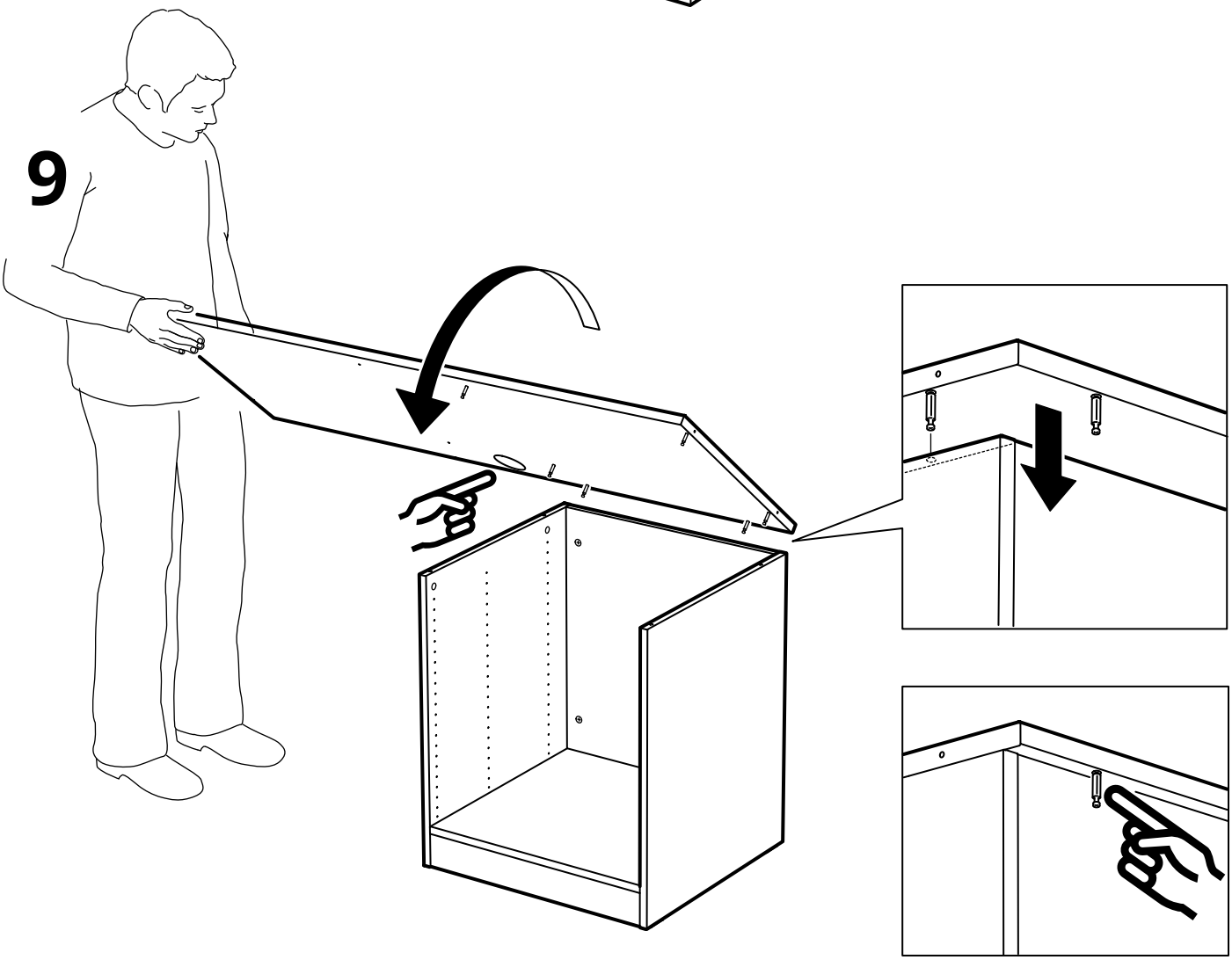

10

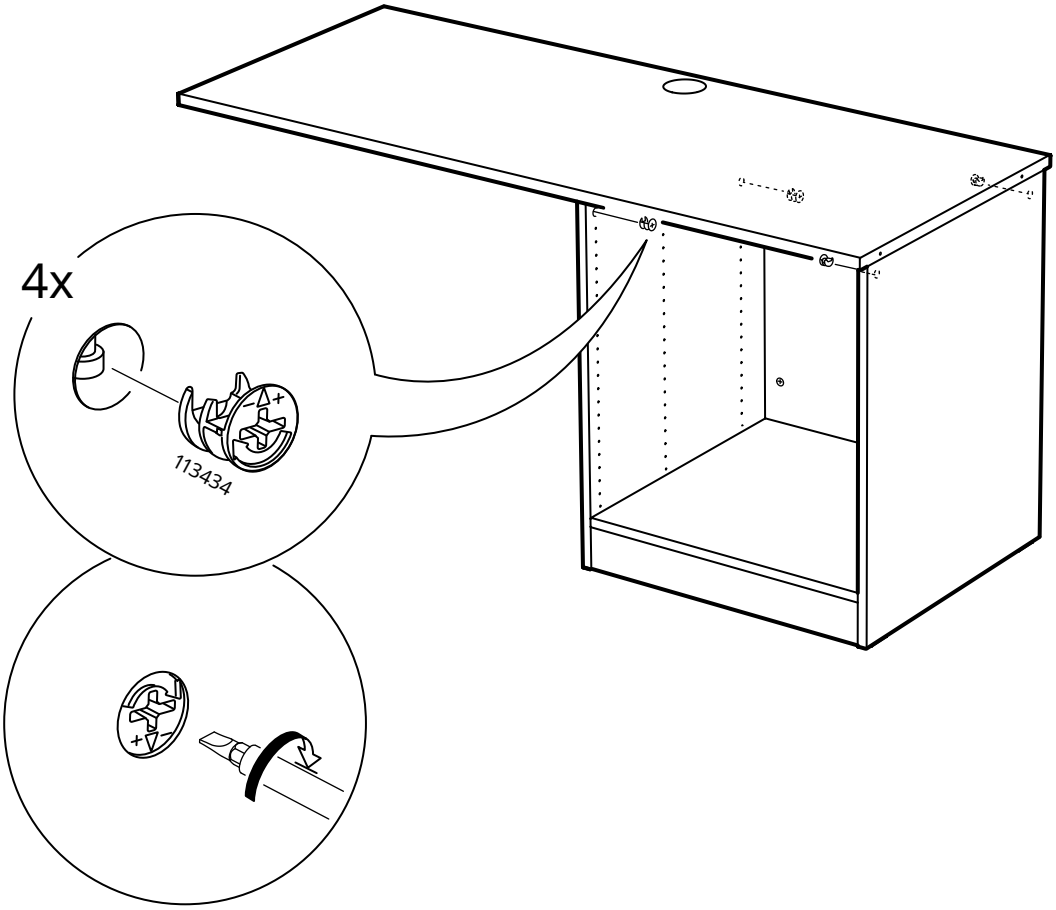

11

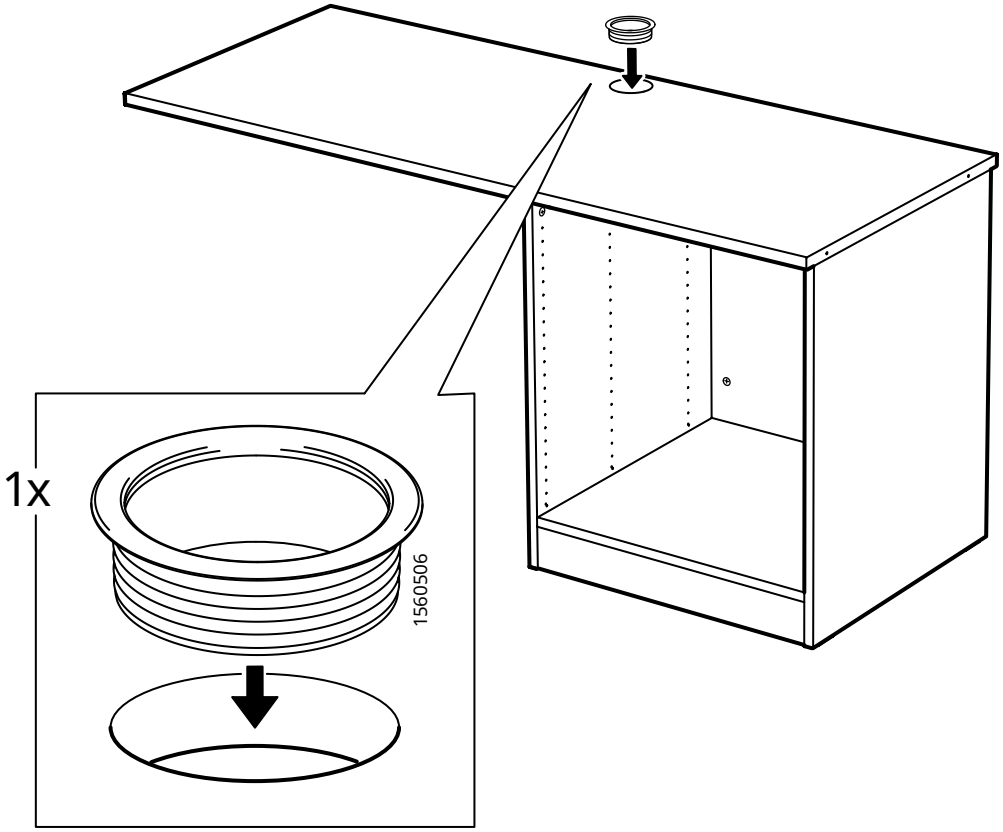

12

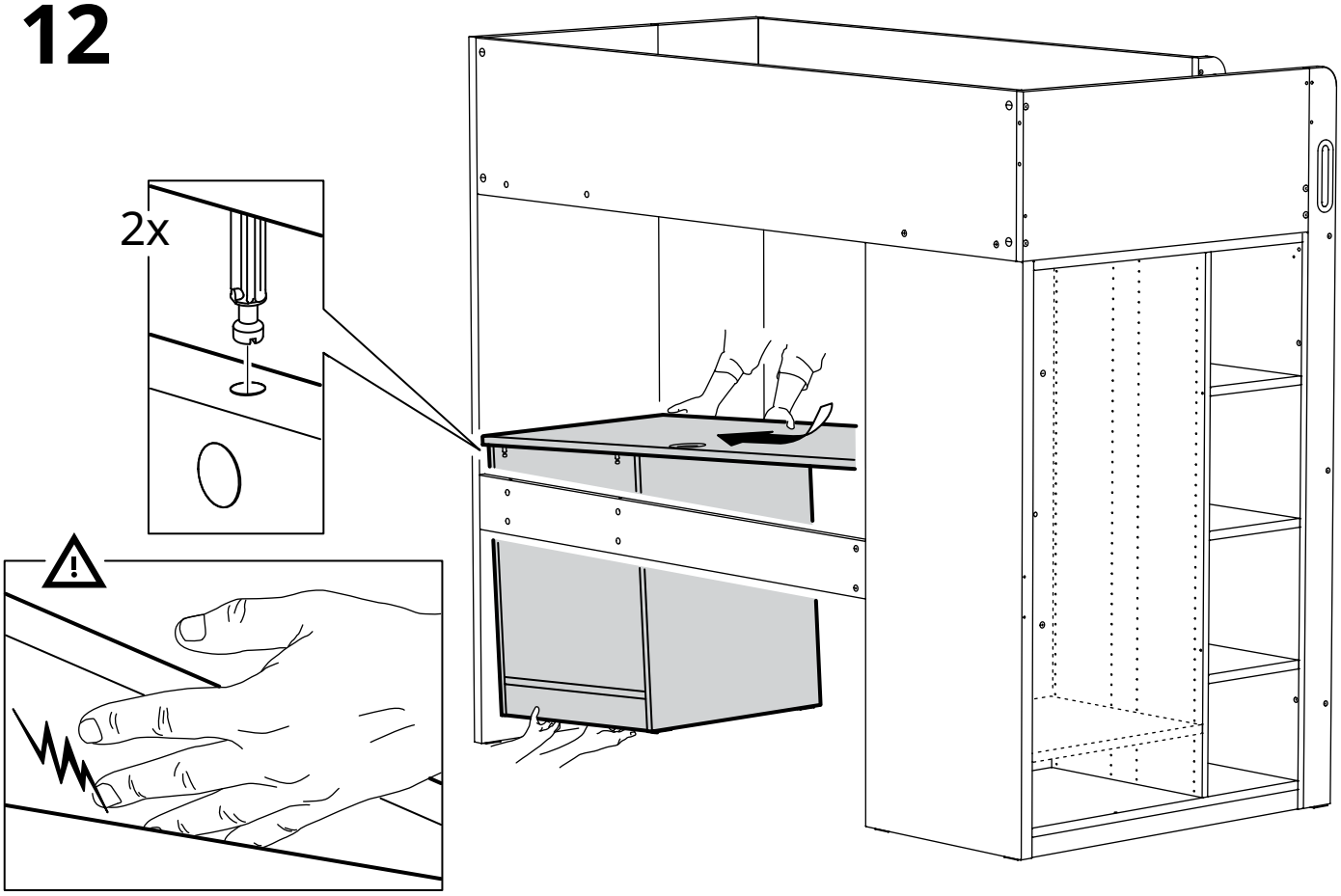

13

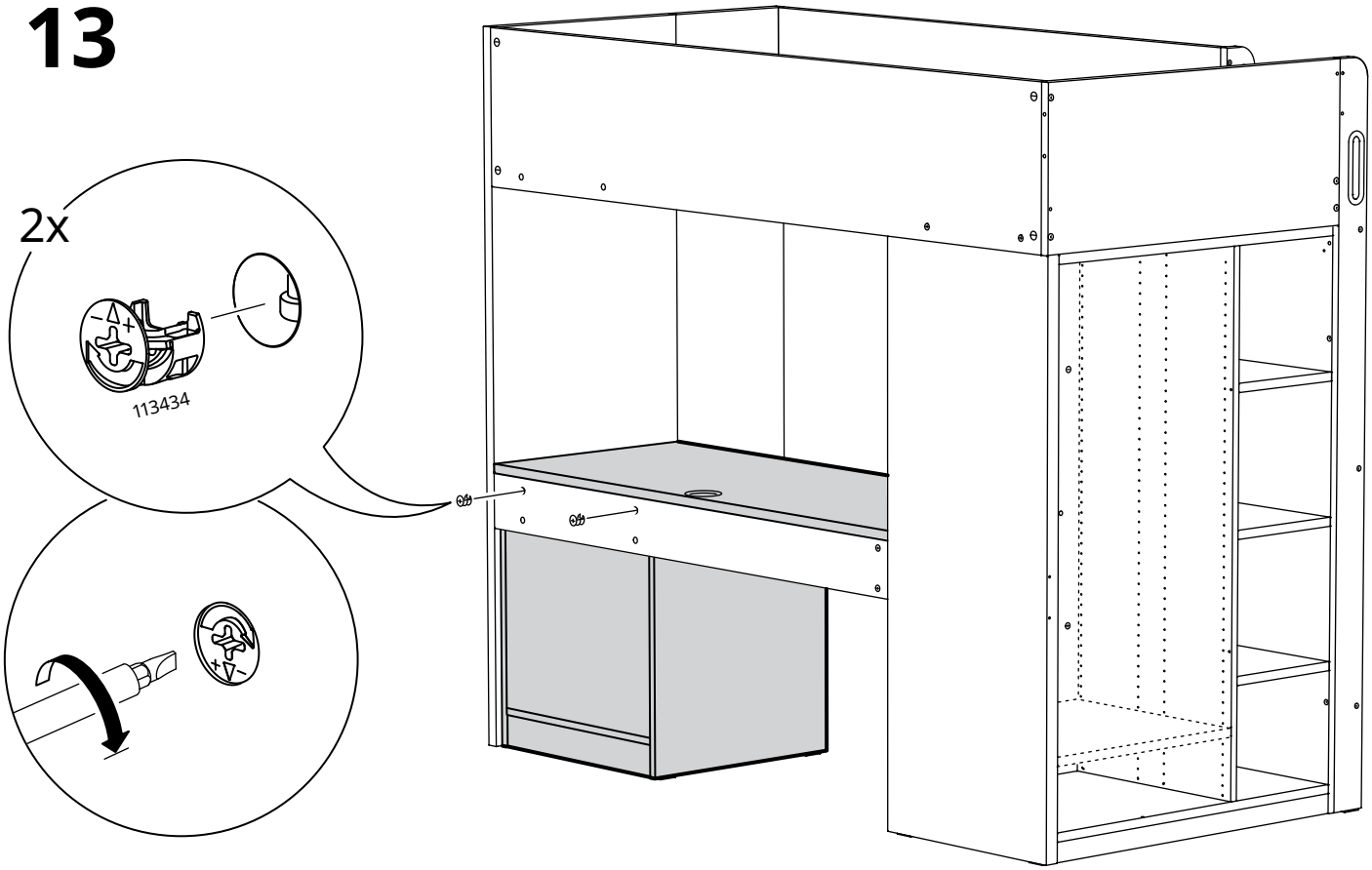

14

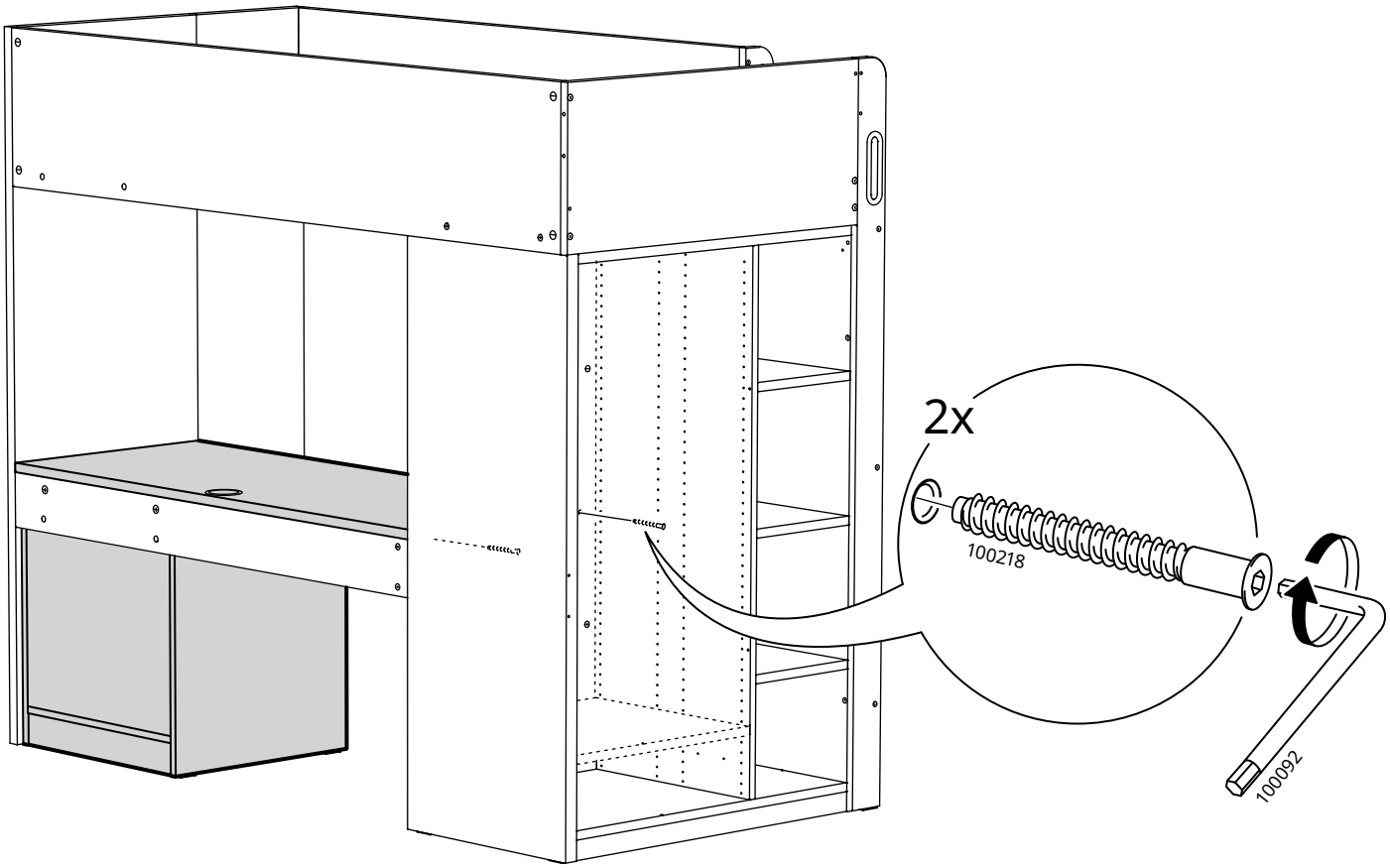

15

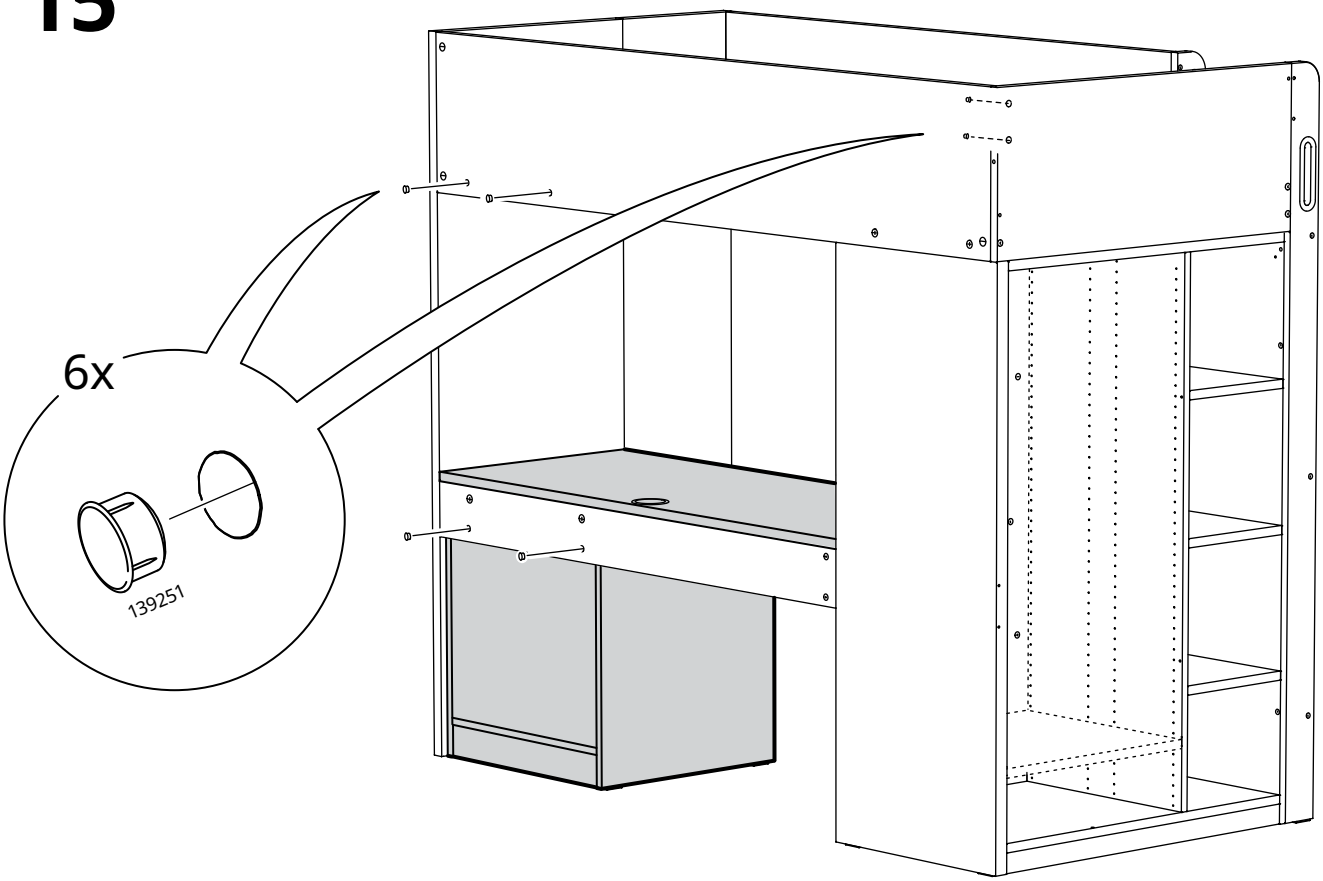

16

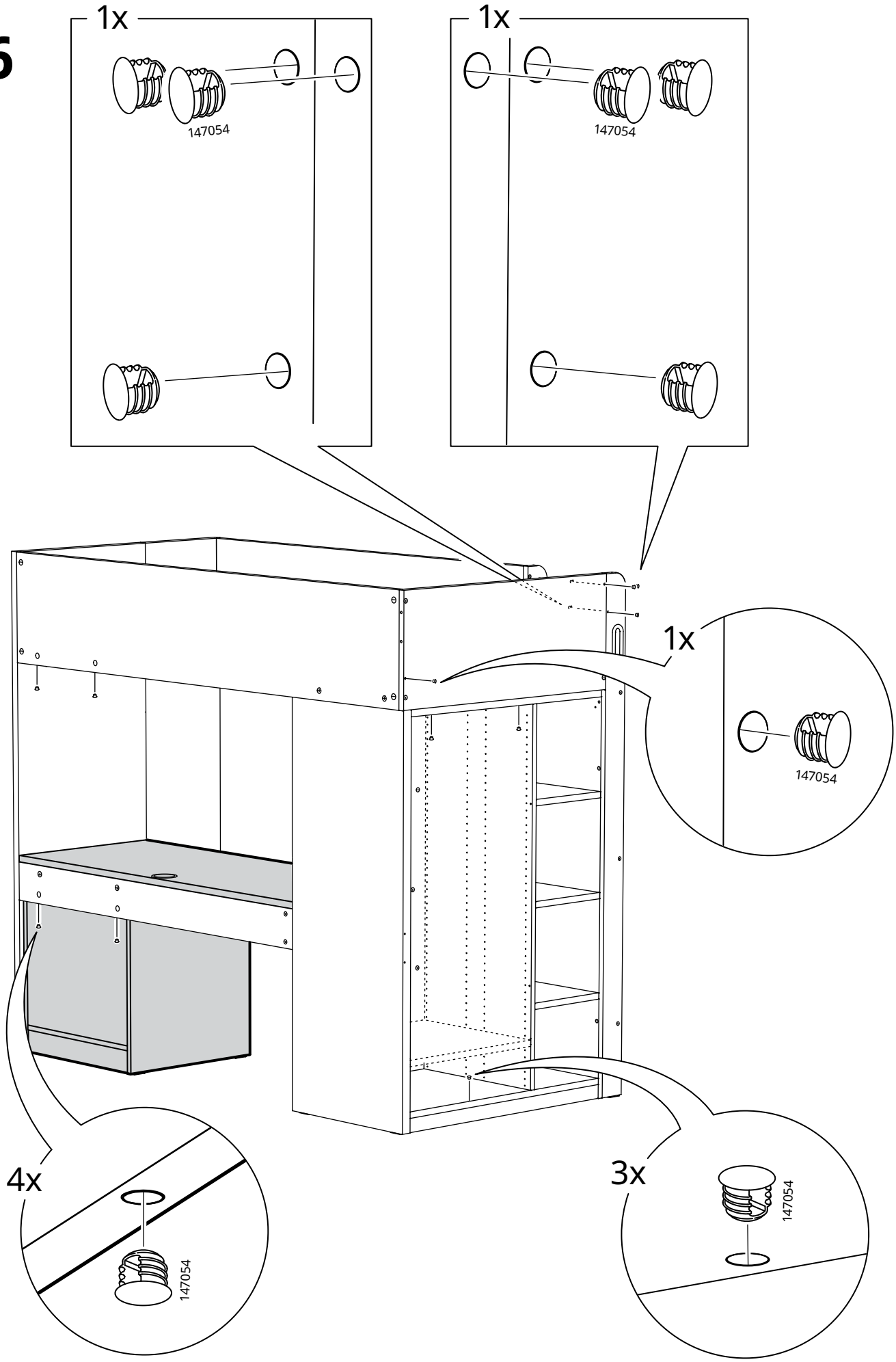

17

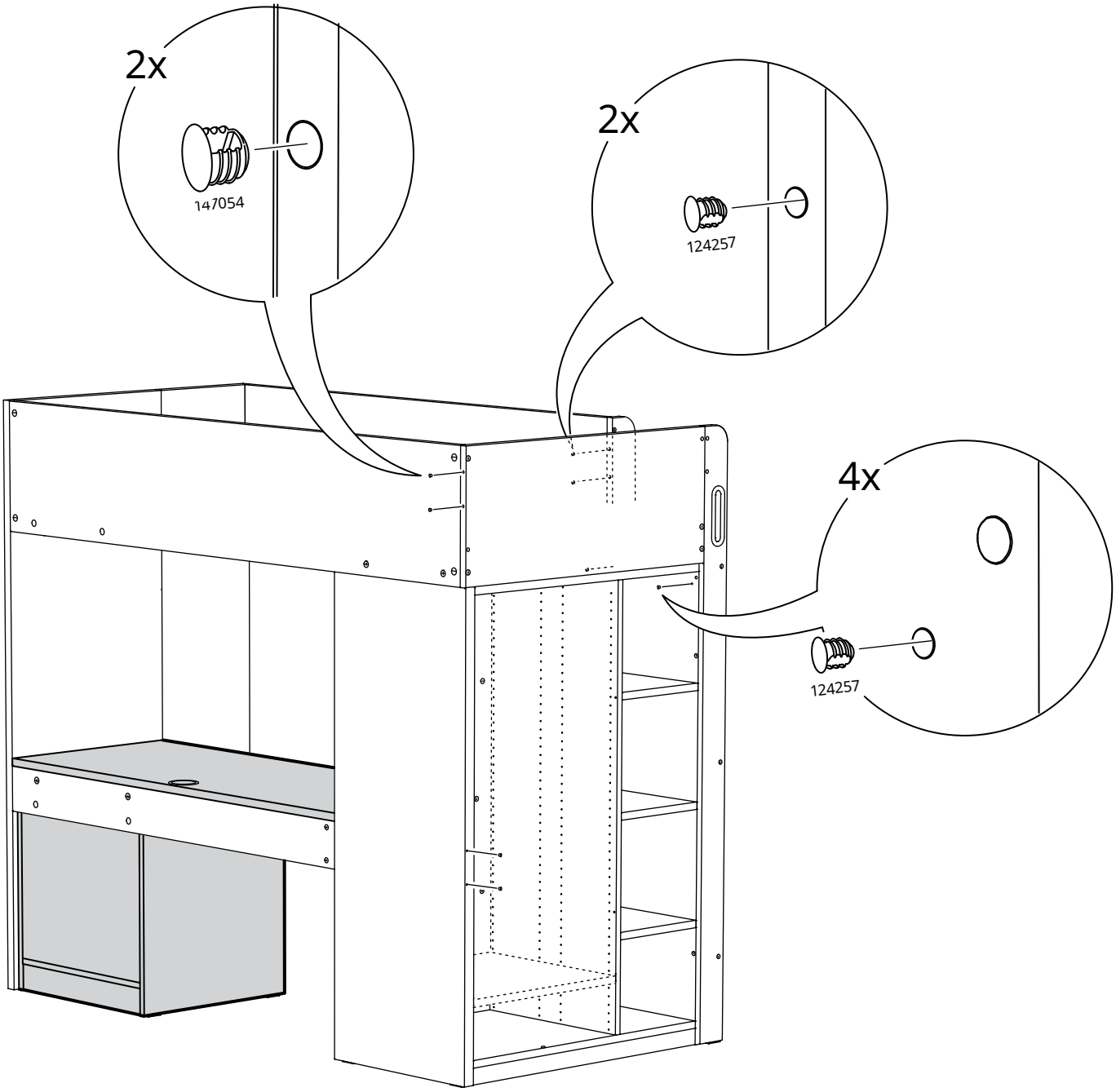

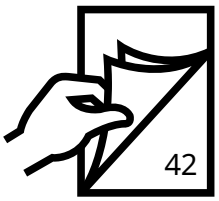

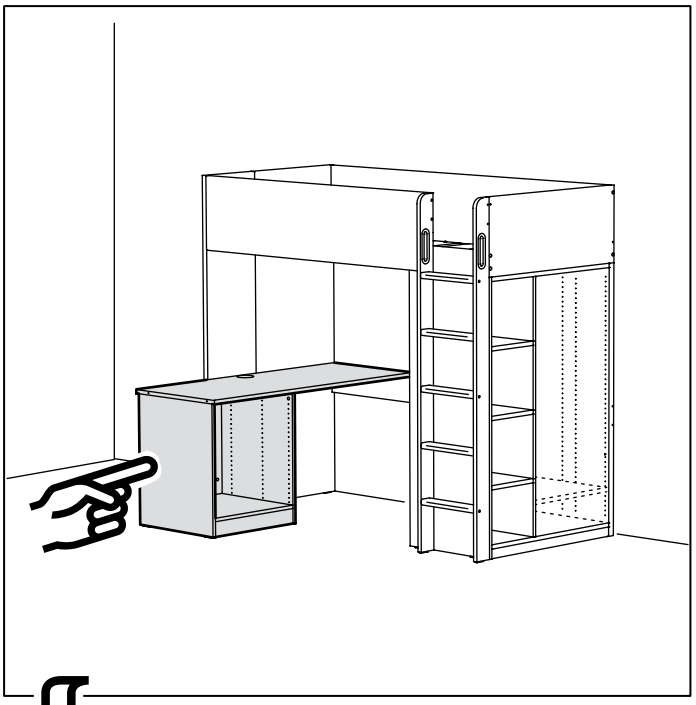

8

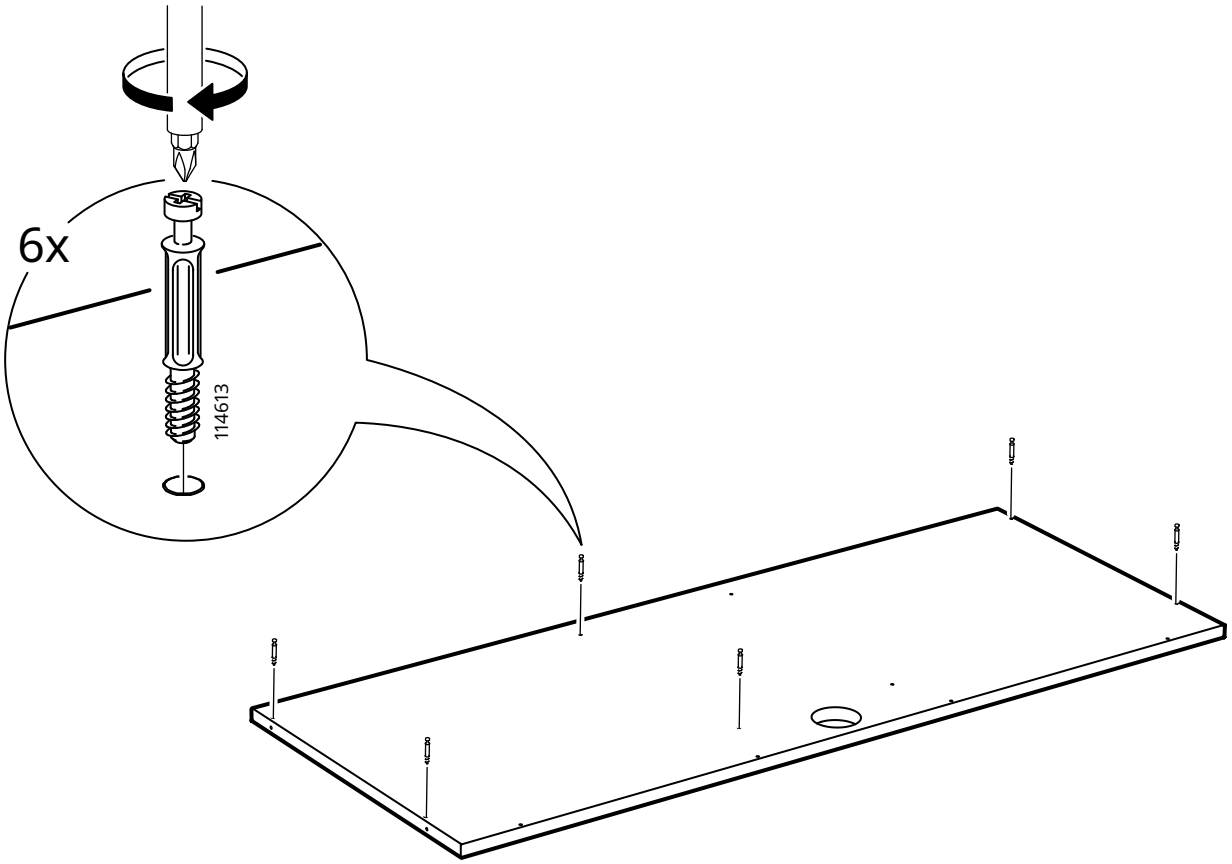

9

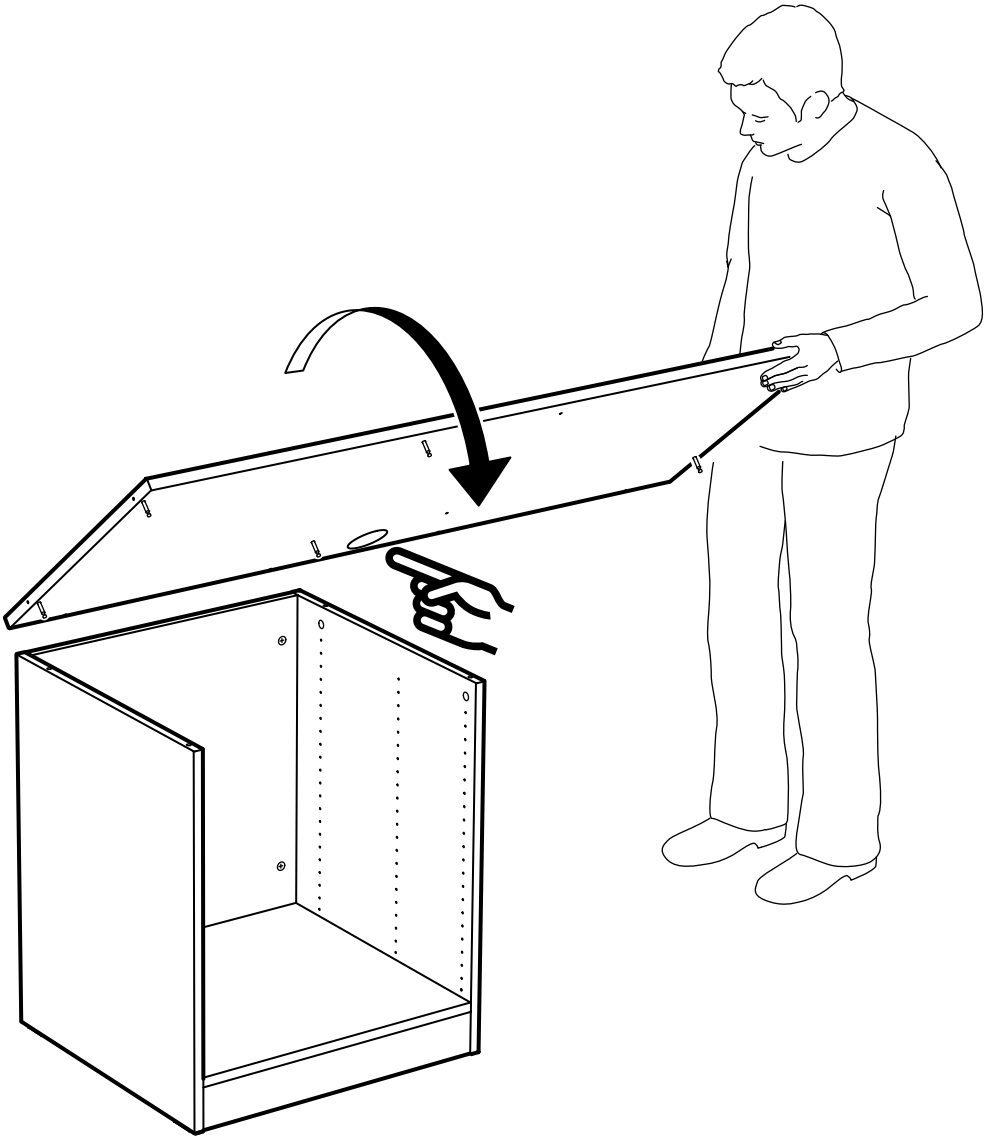

10

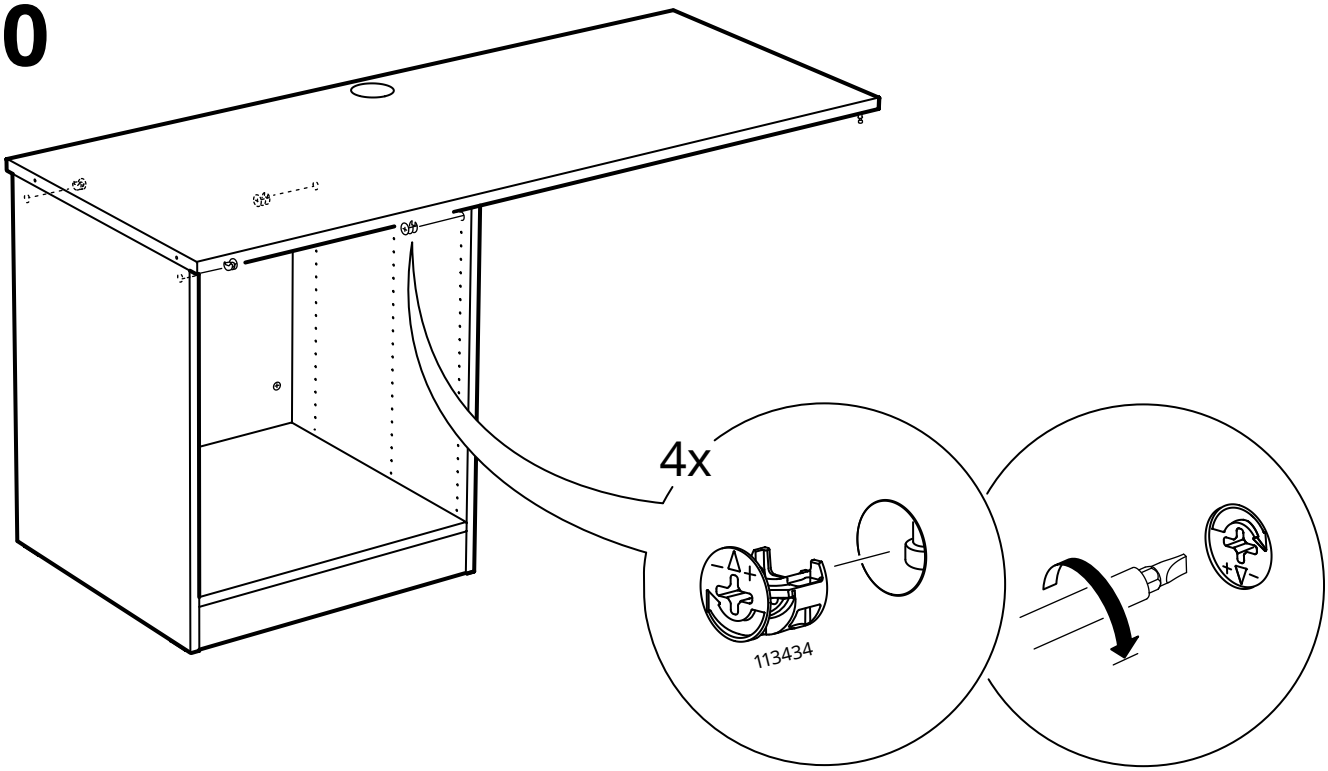

11

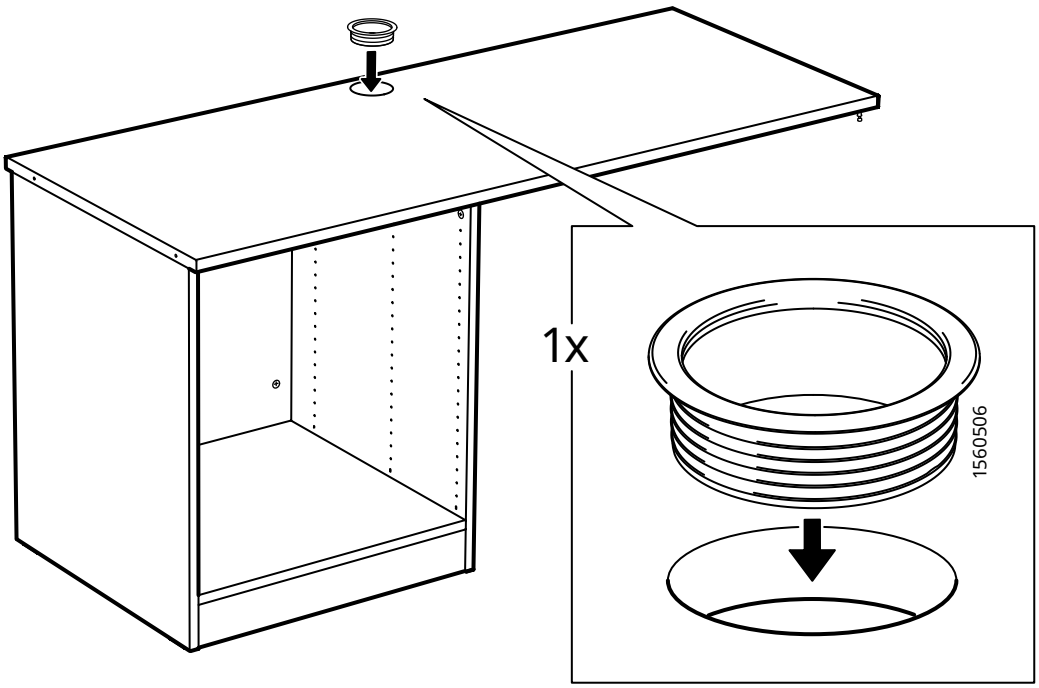

12

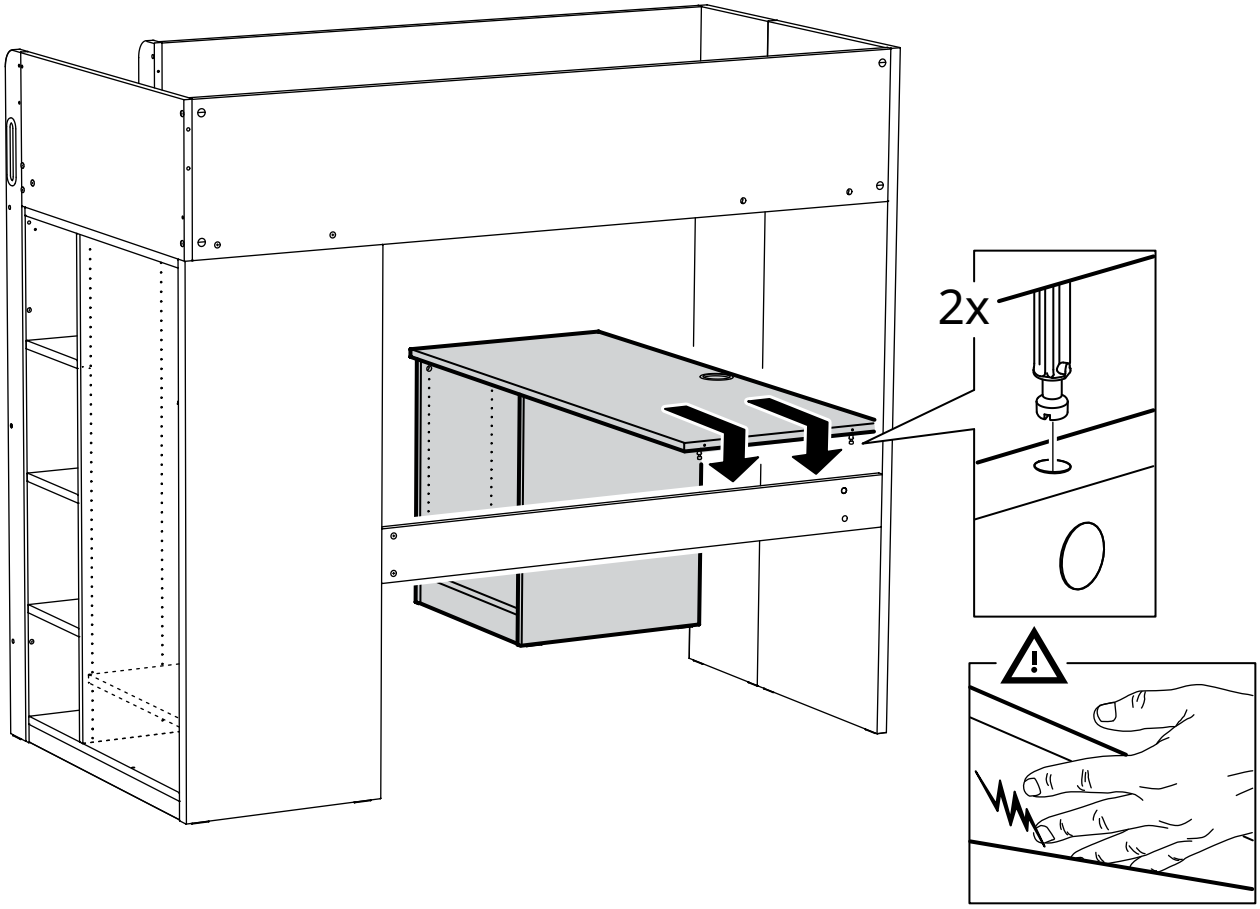

13

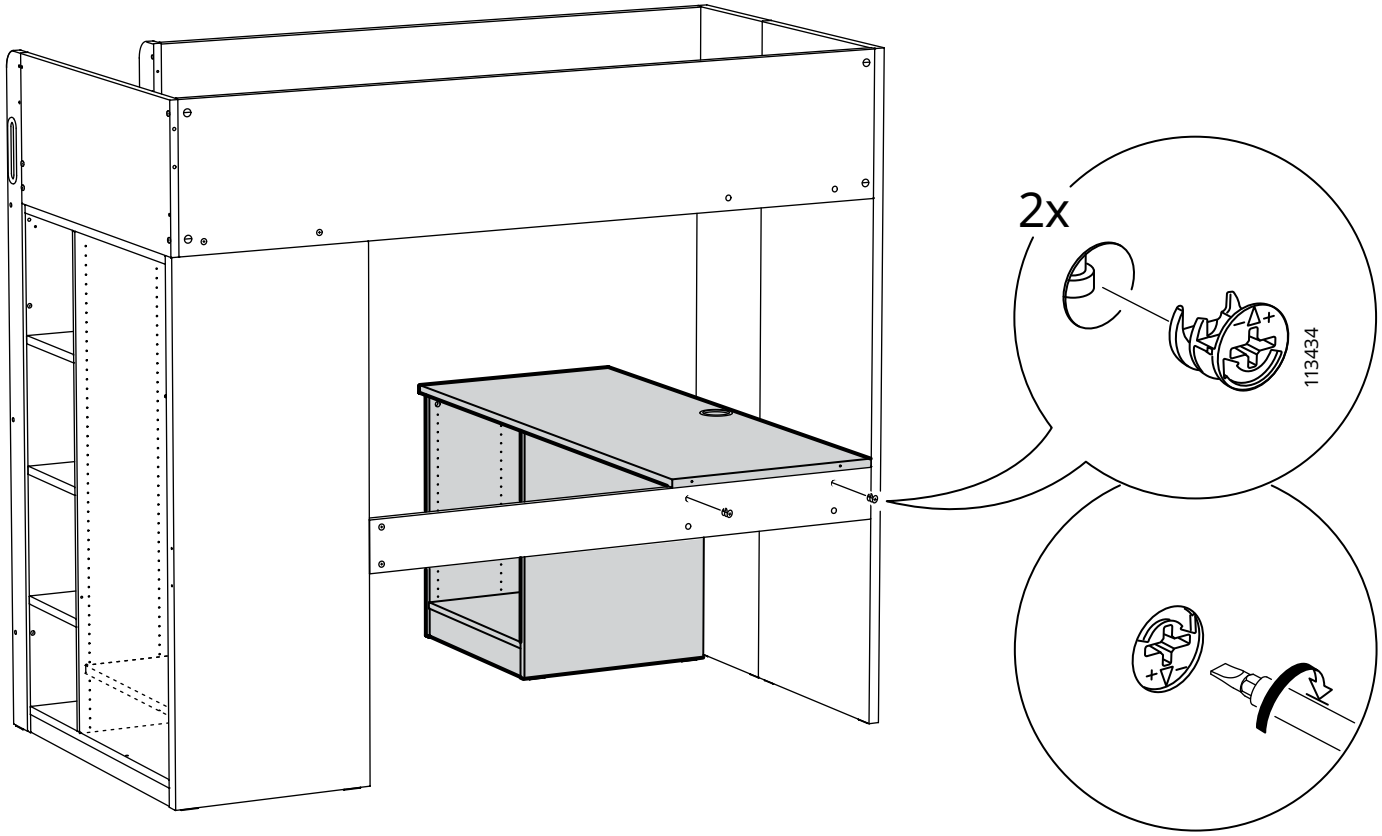

14

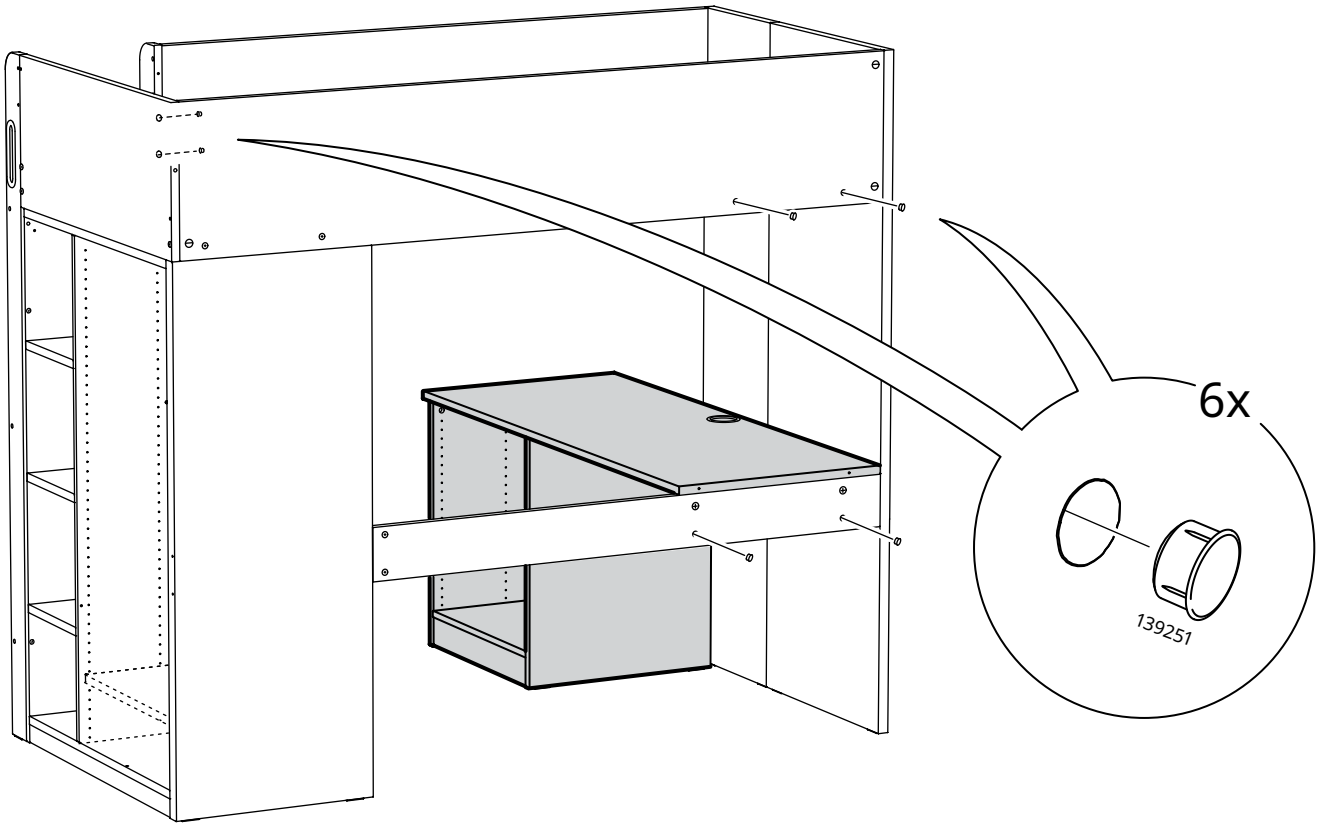

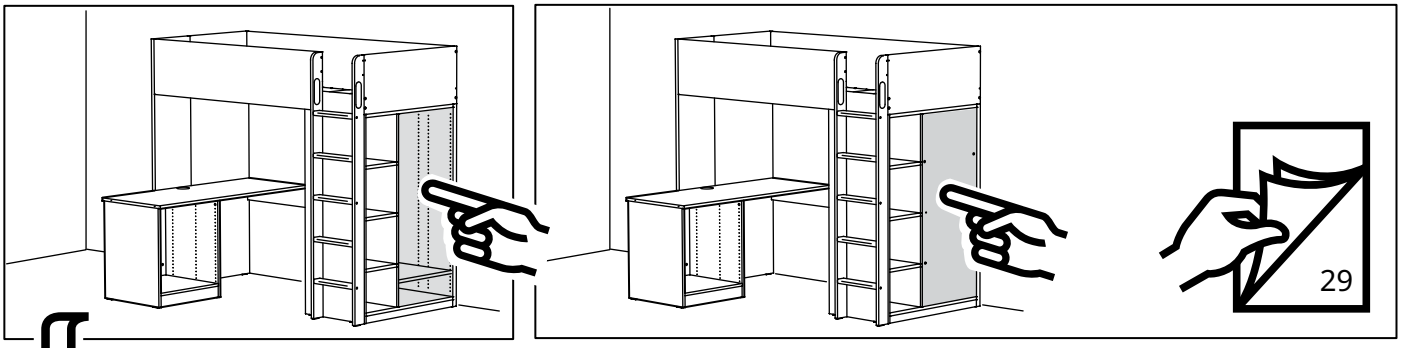

15

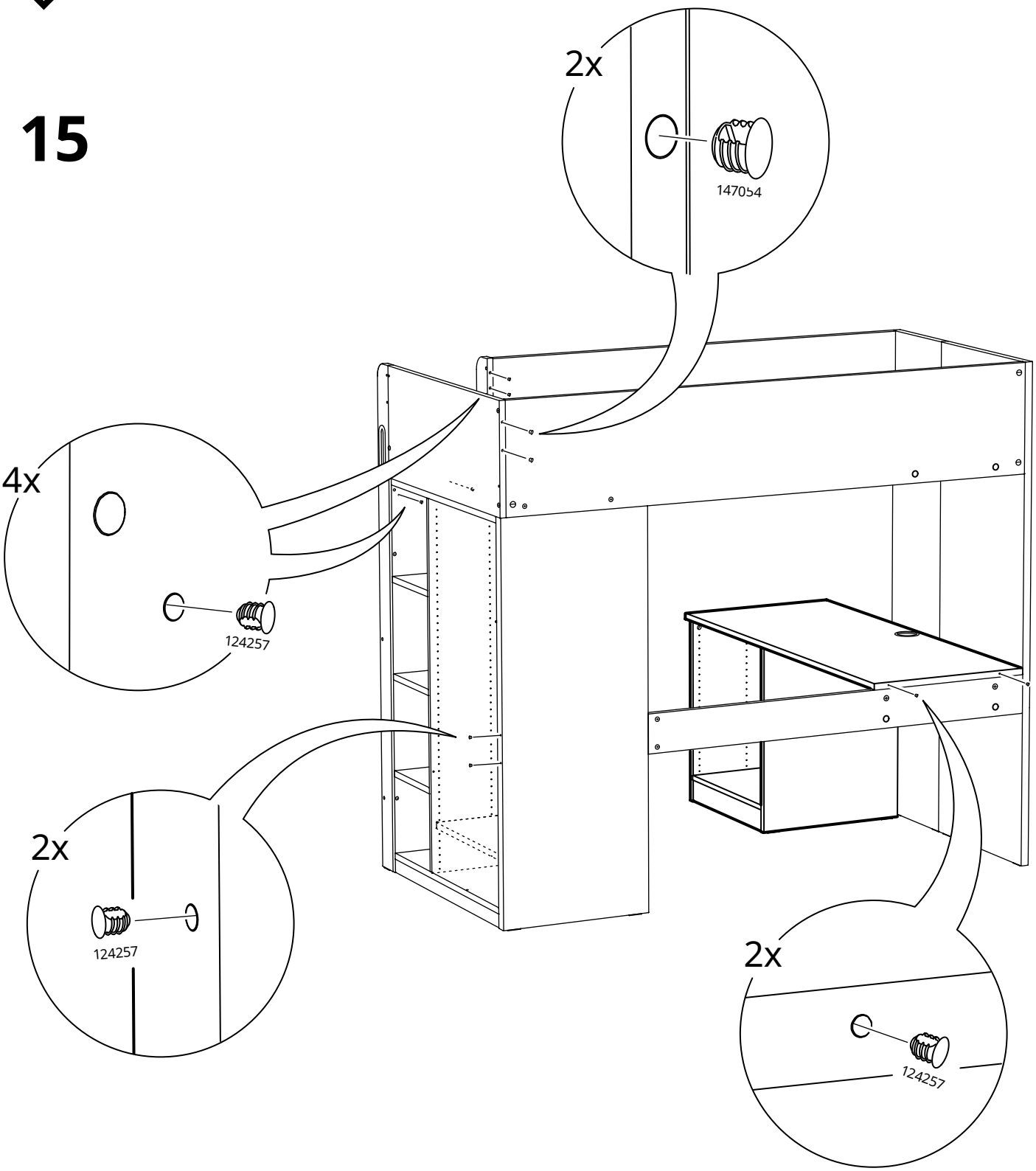

16

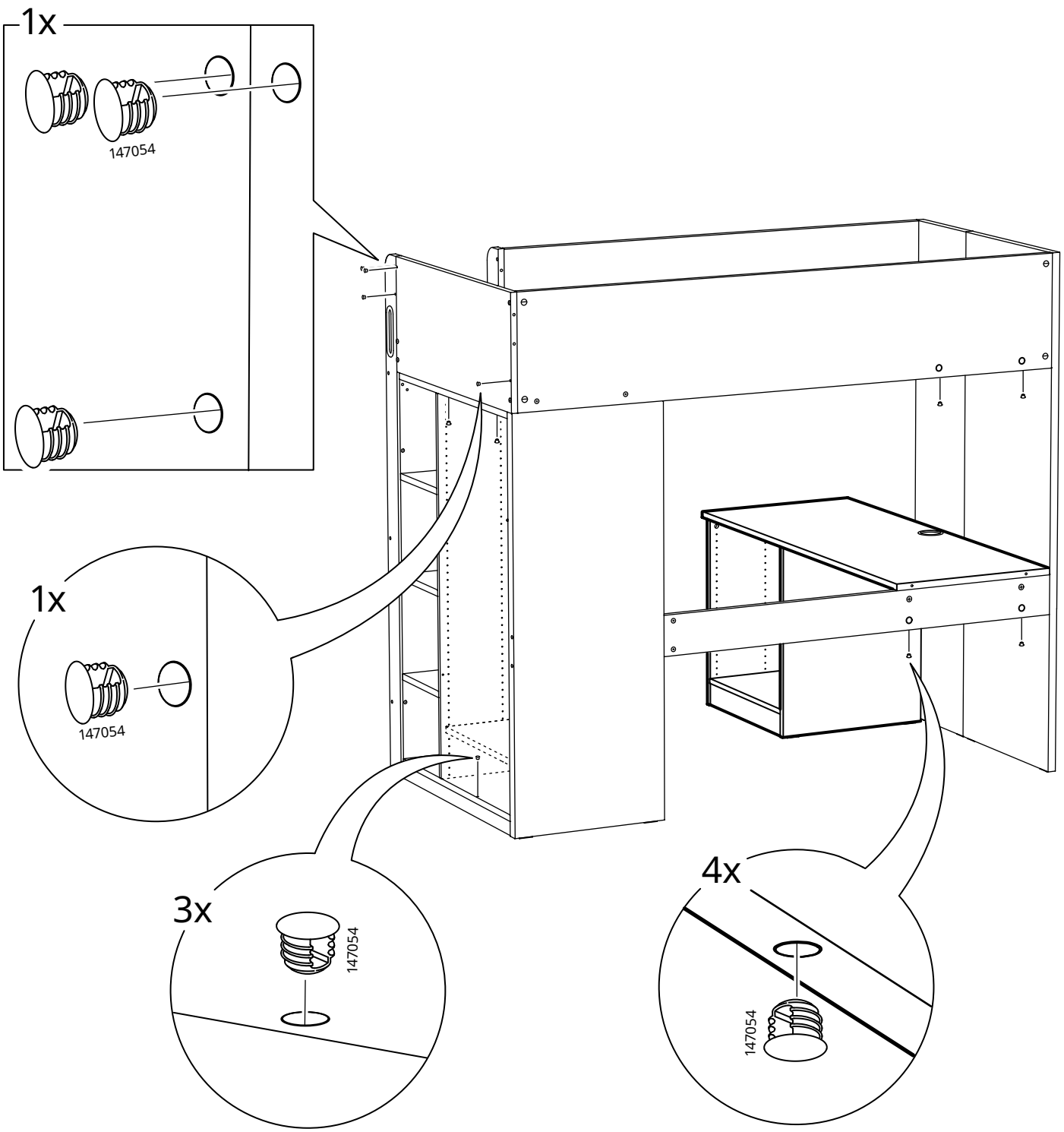

17

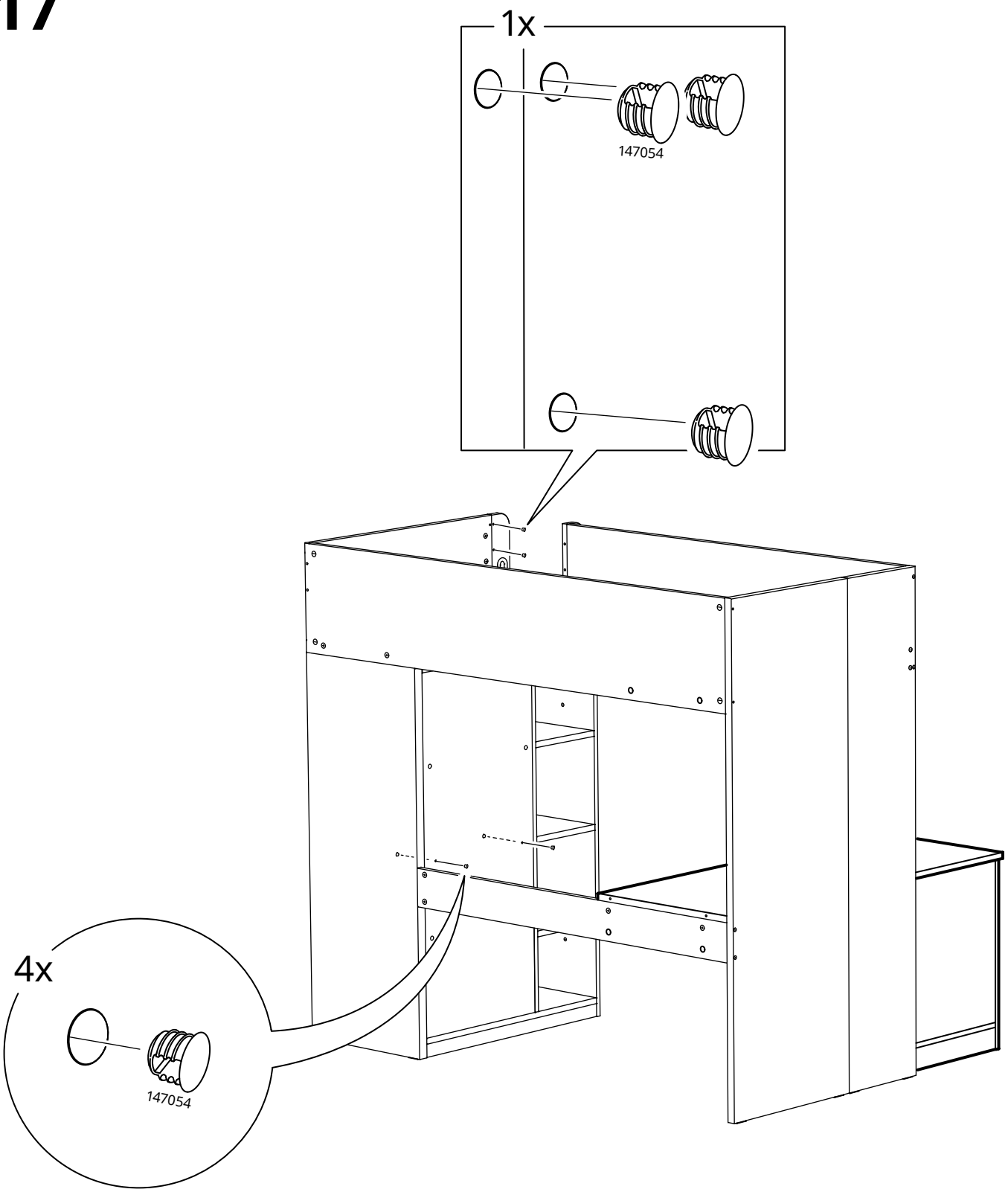

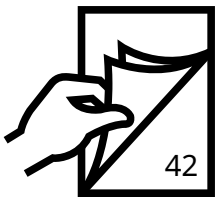

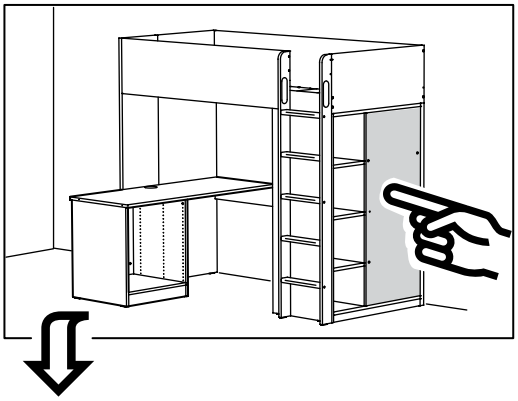

15

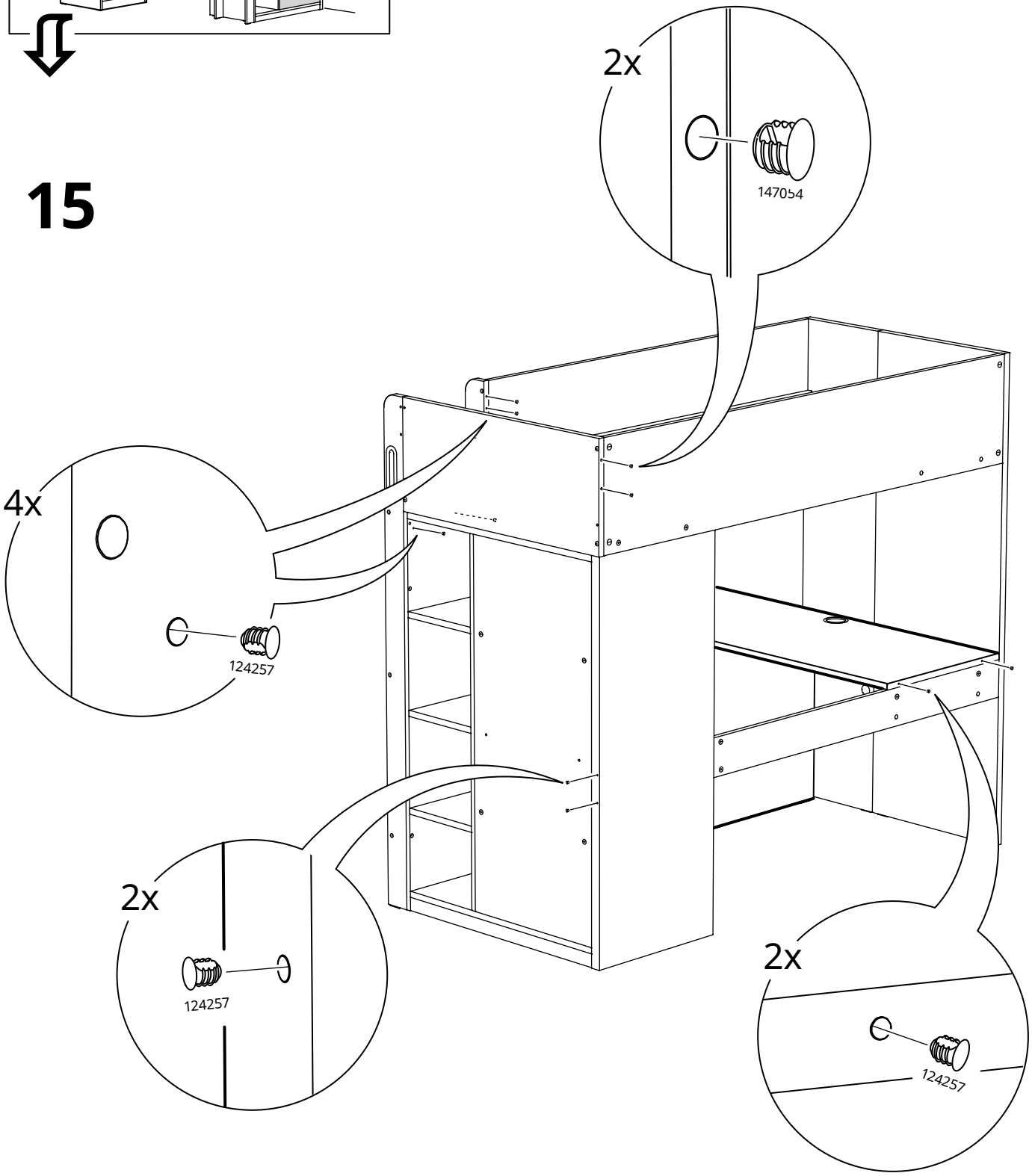

16

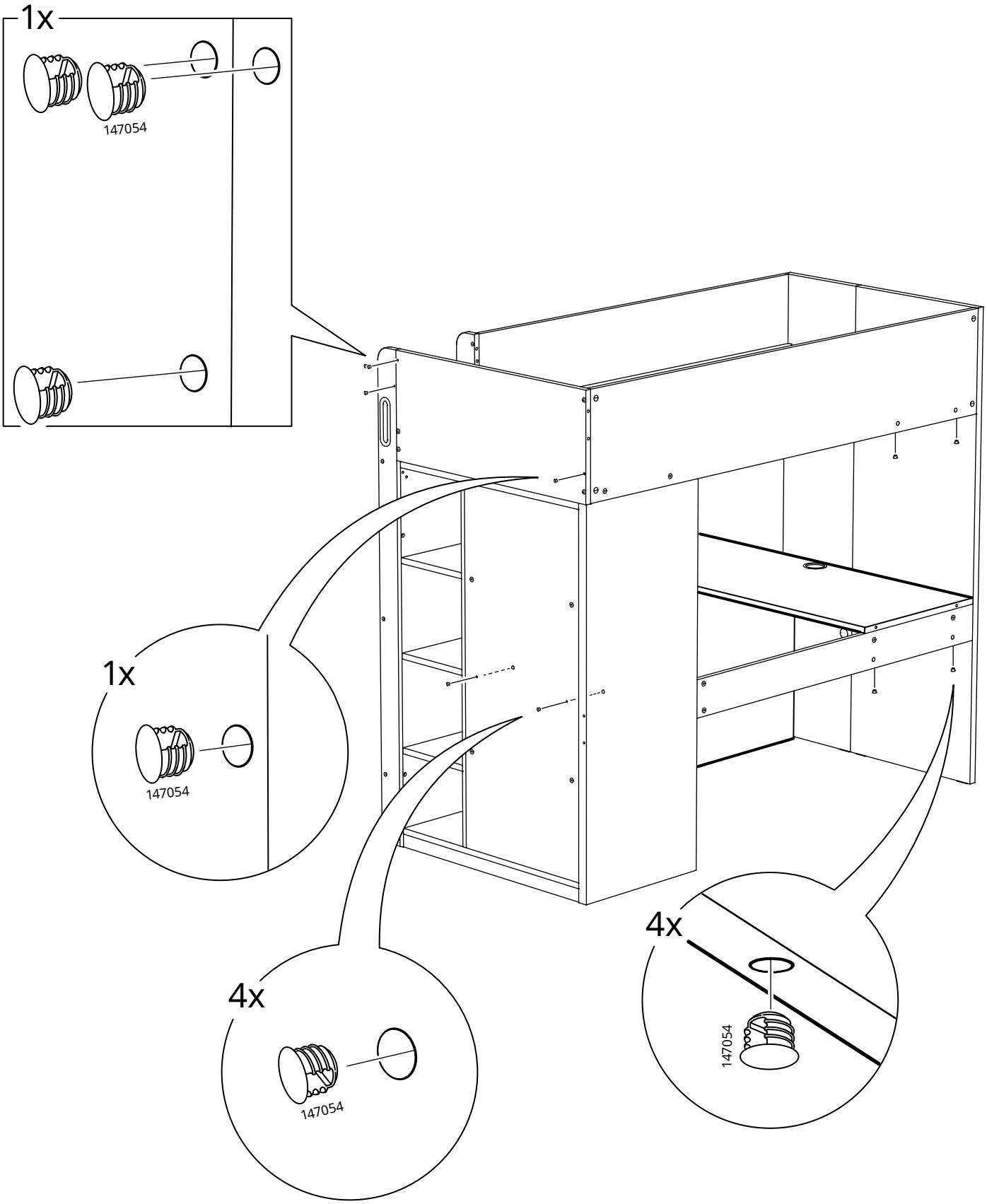

17

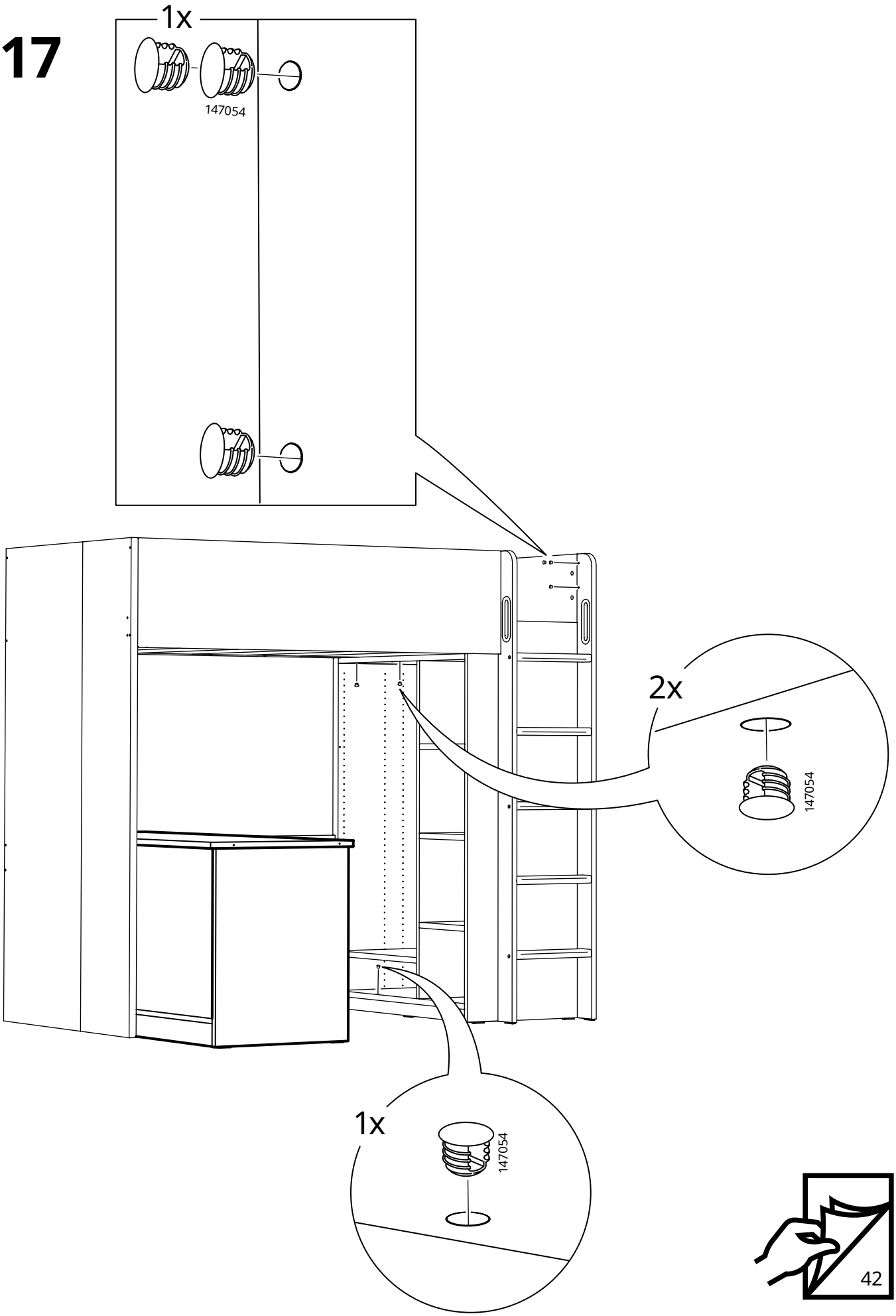

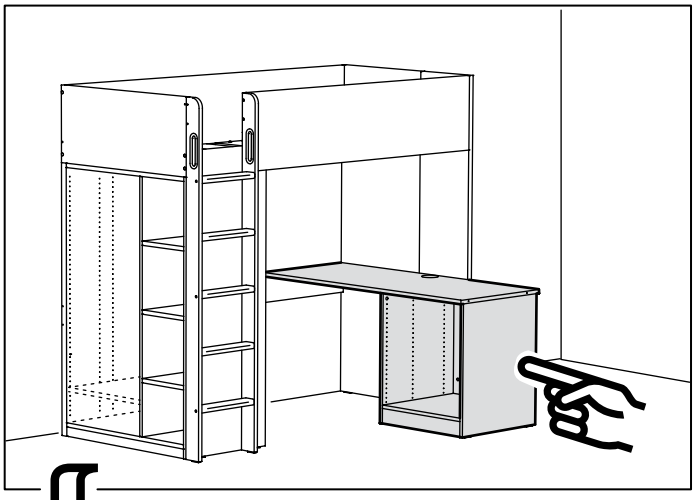

8

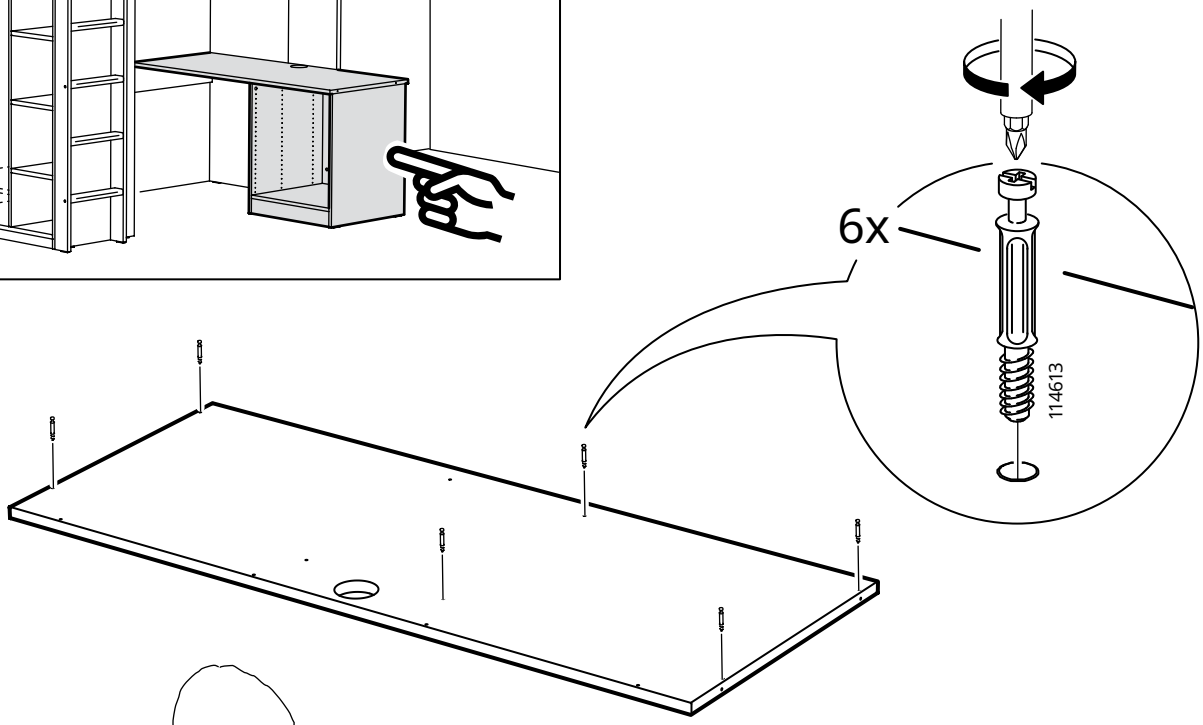

9

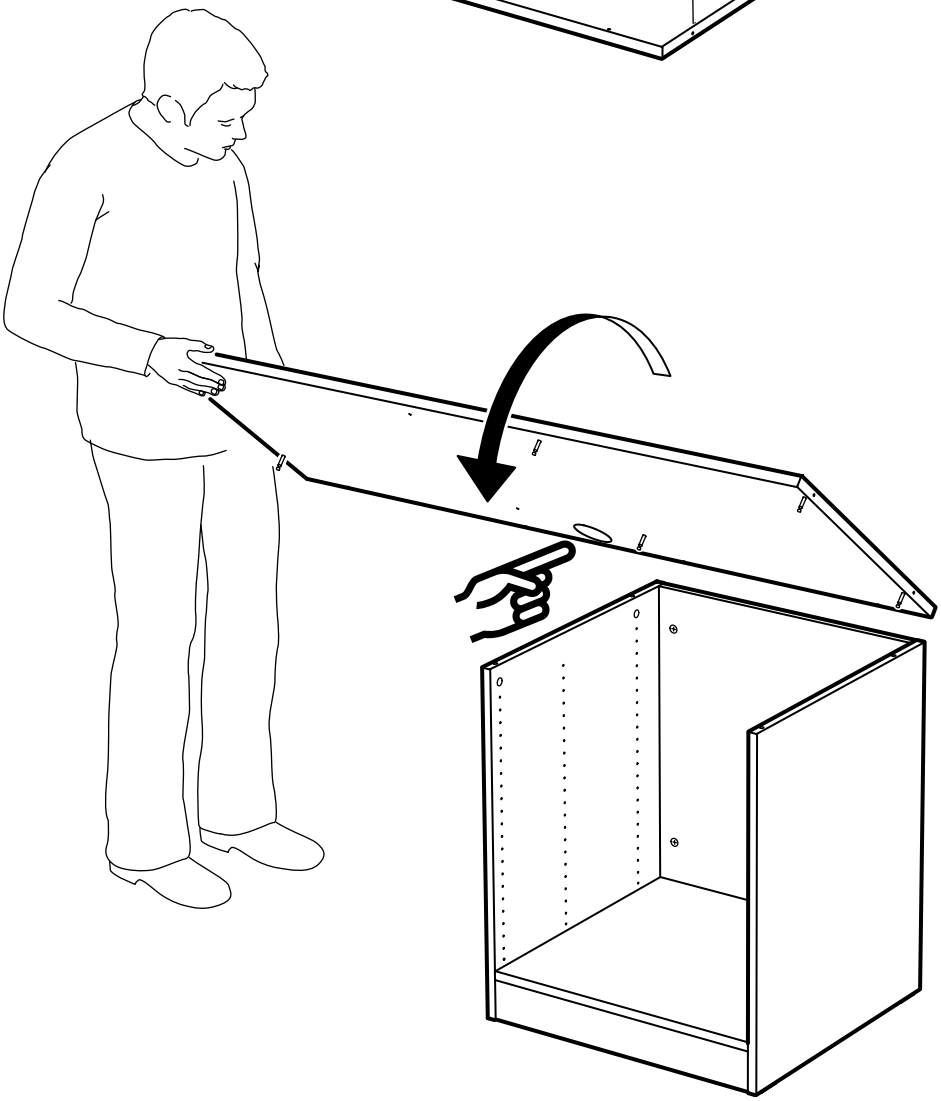

10

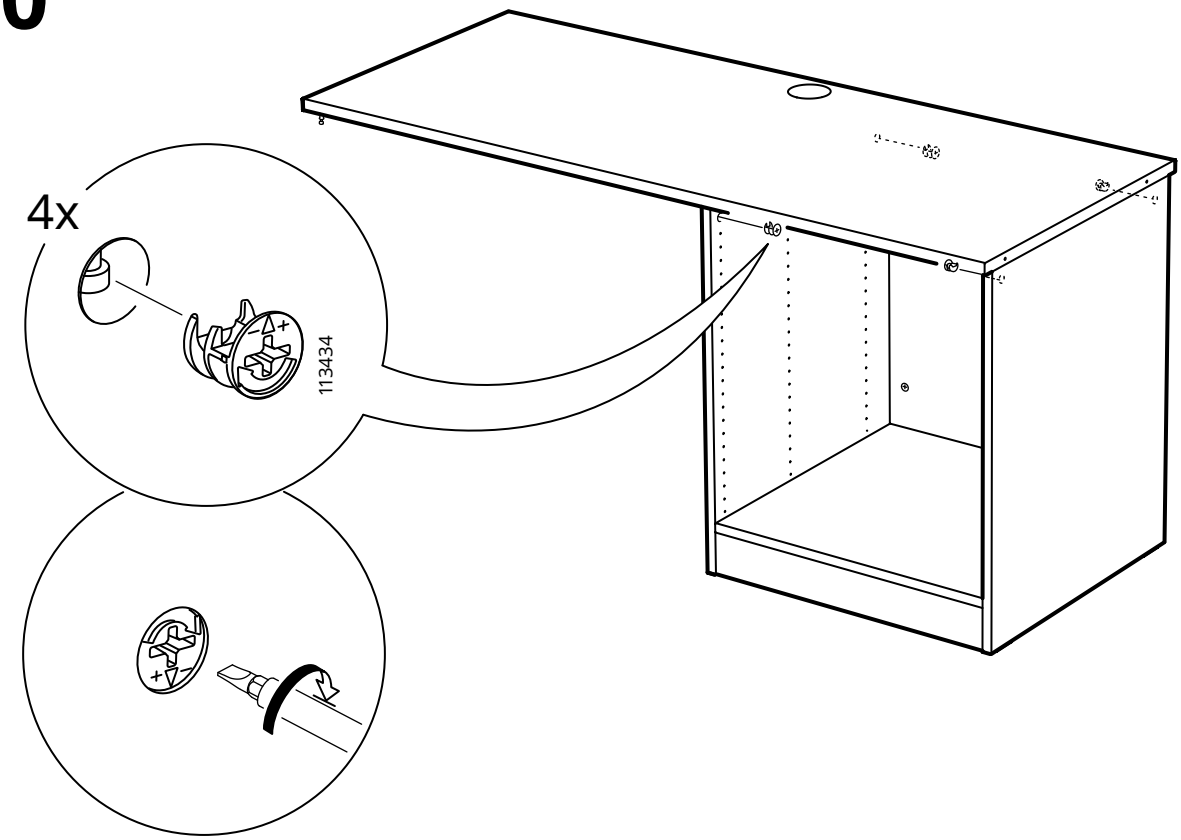

11

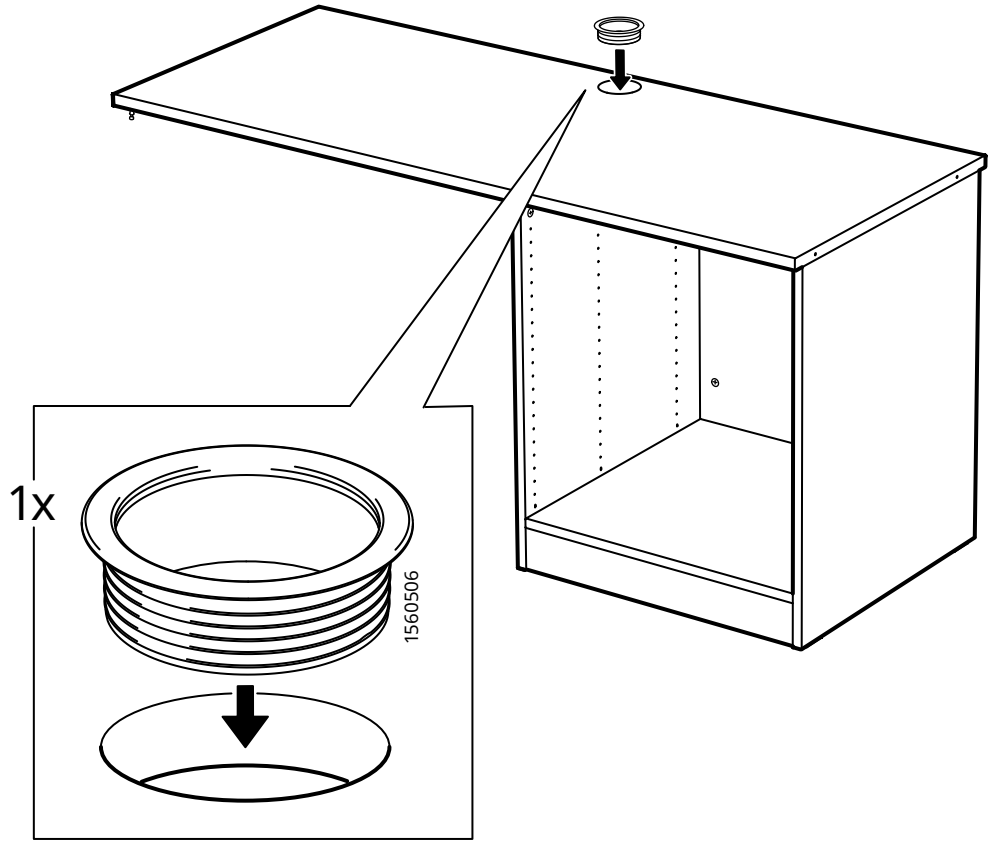

12

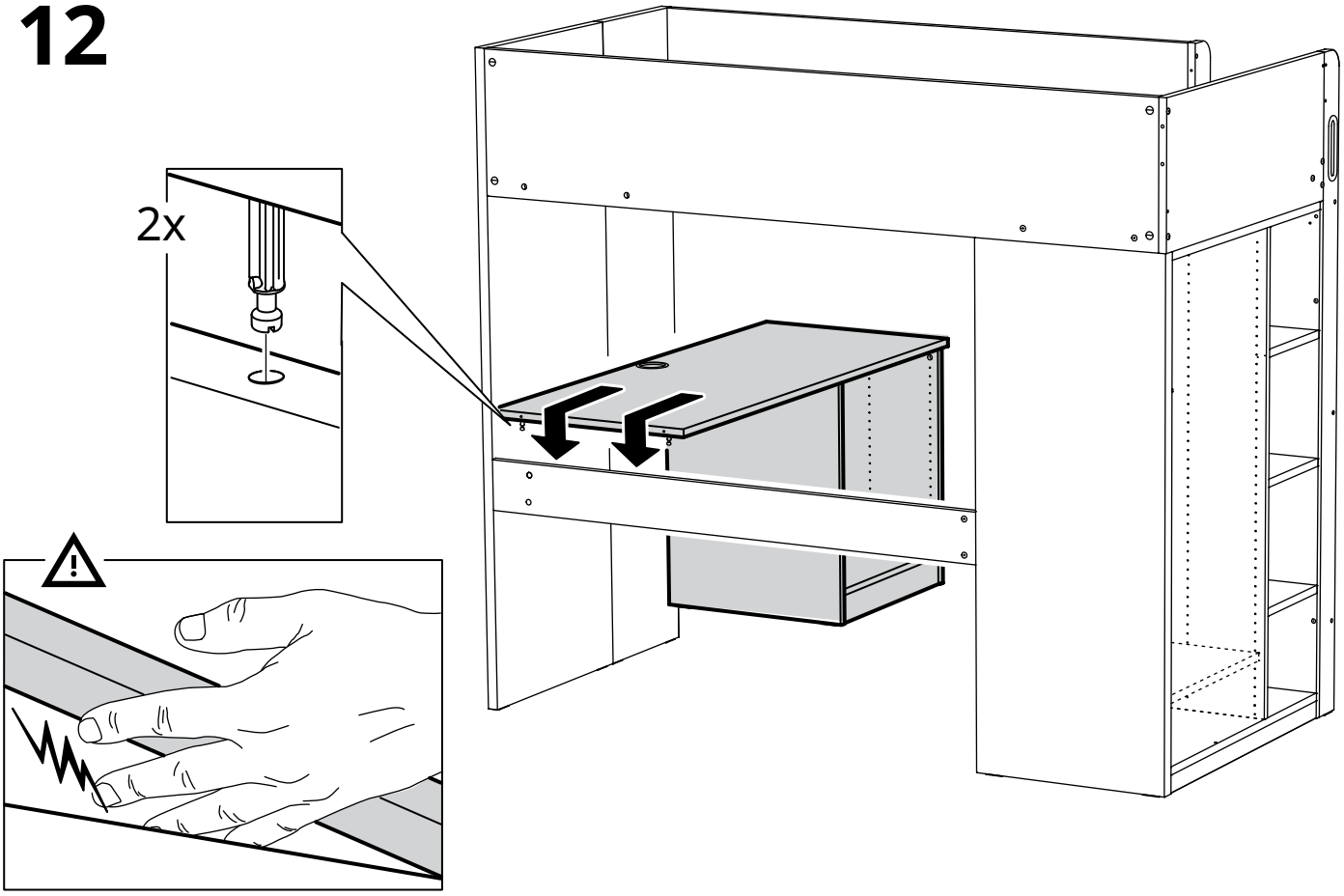

13

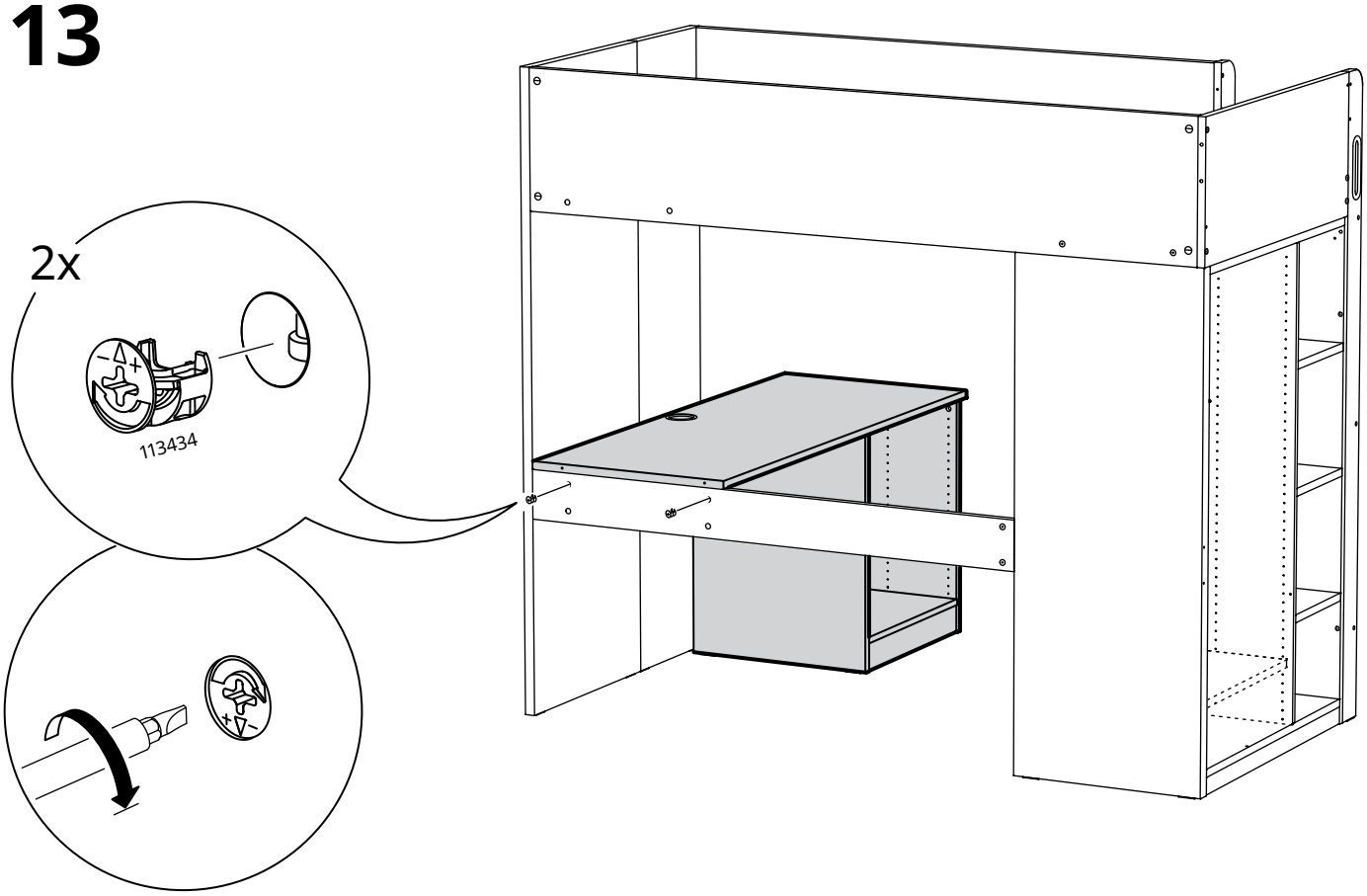

14

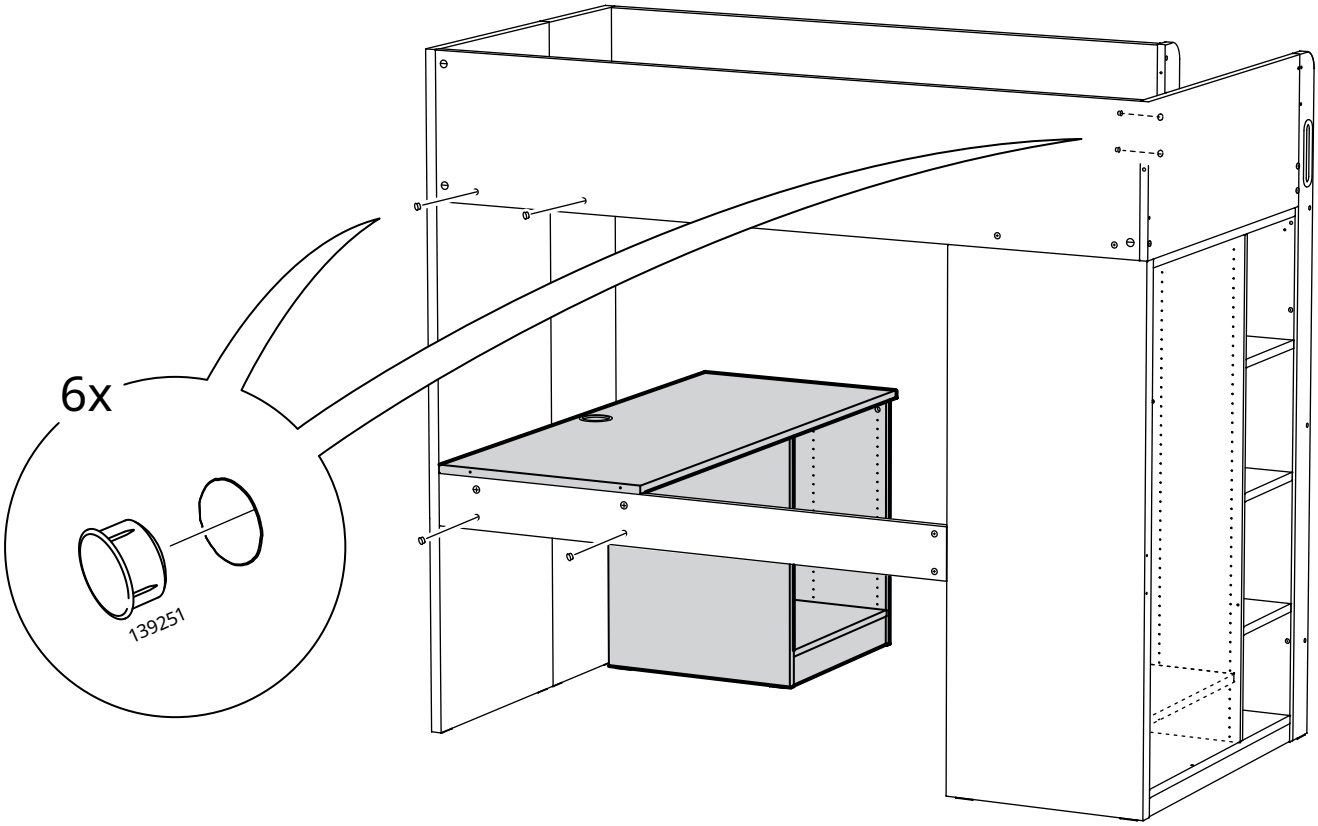

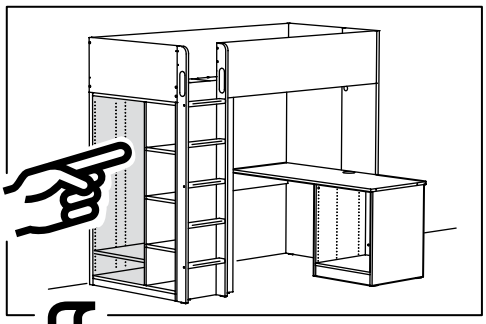

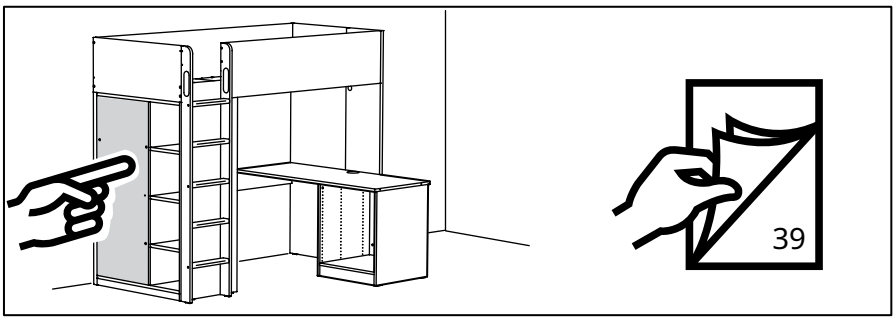

15

2x

147054

2x

124257

2x

124257

4x

124257

16

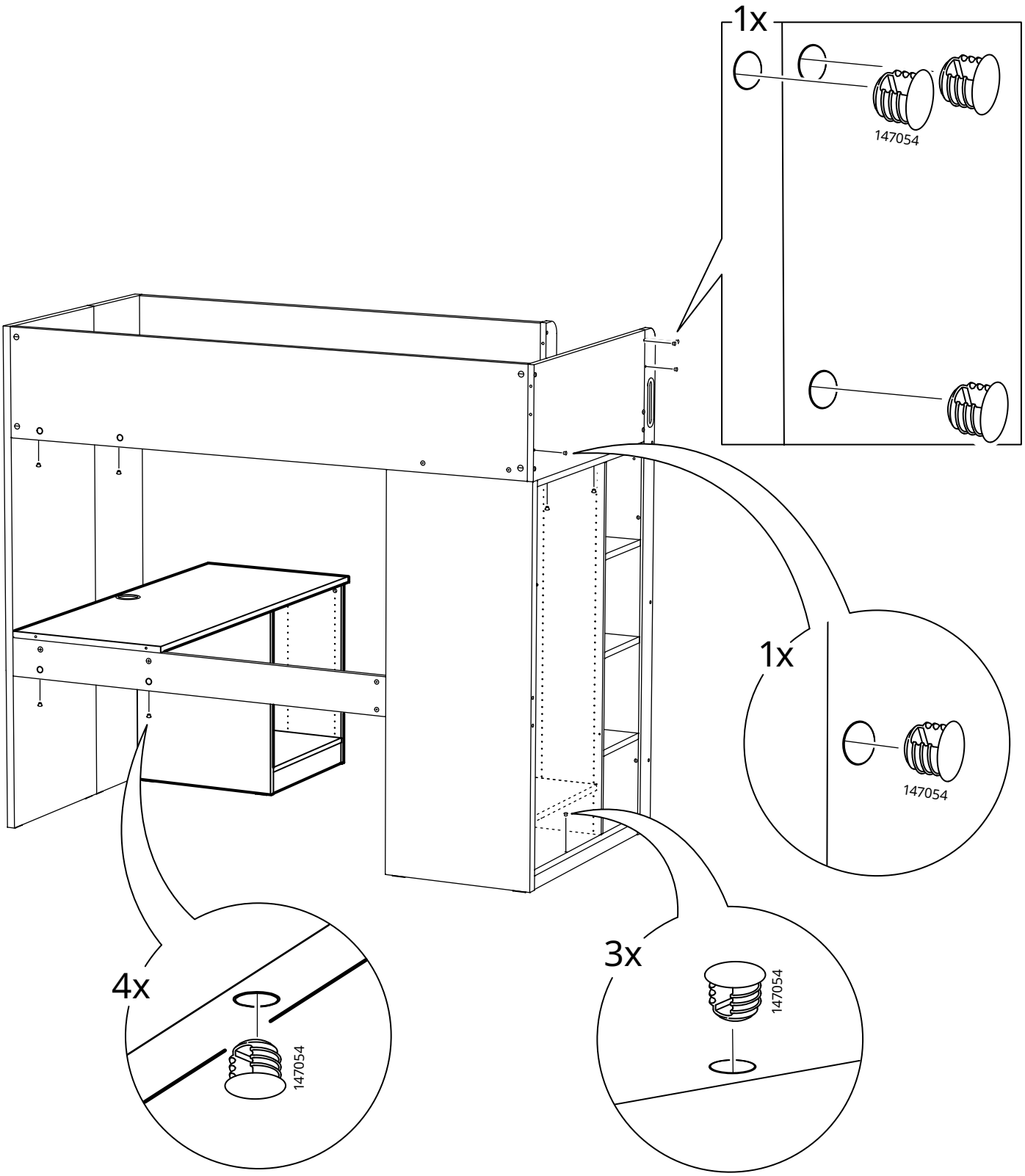

17

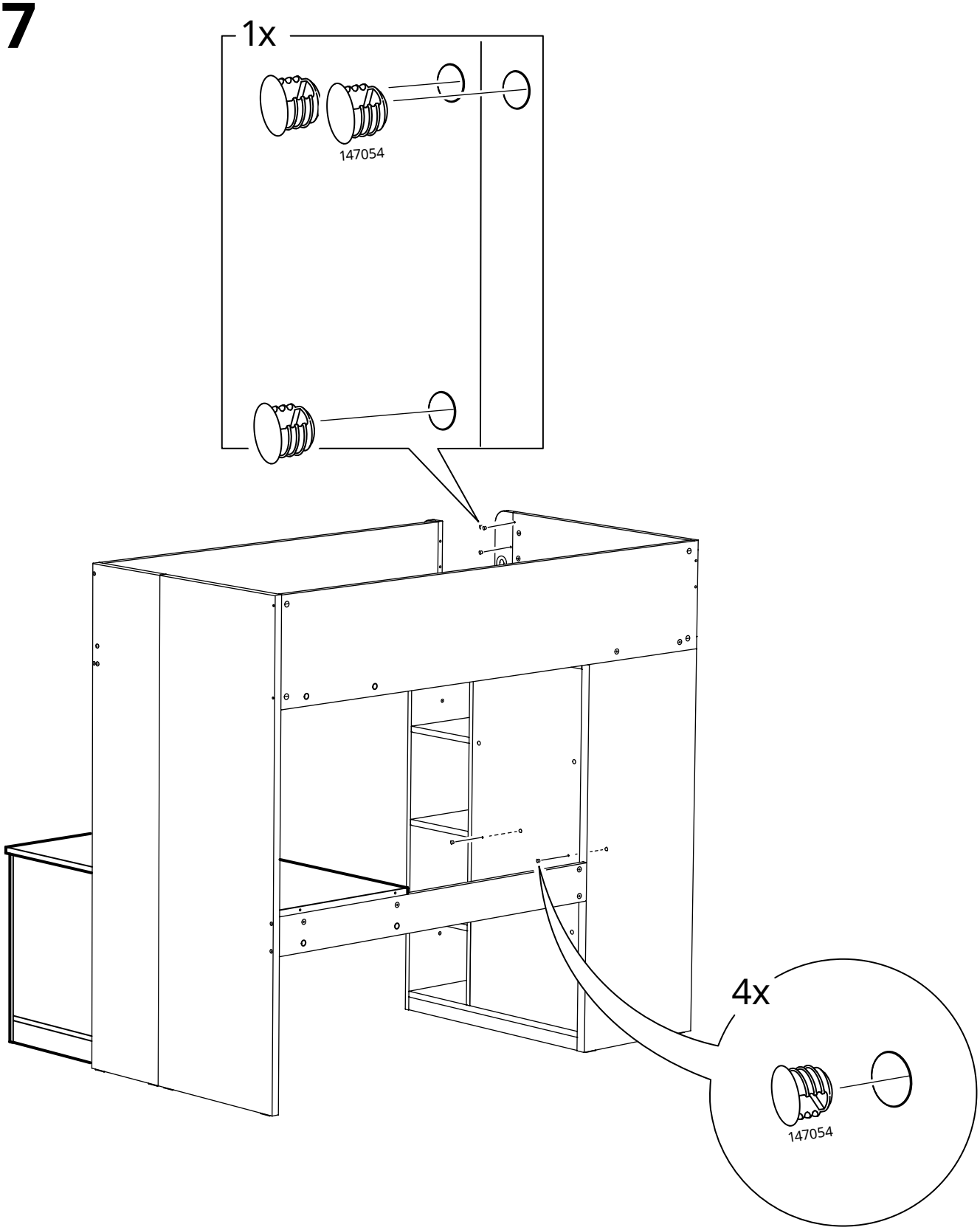

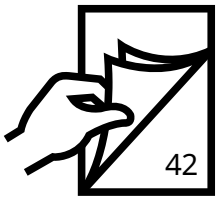

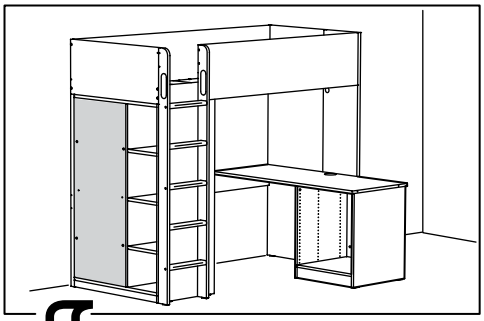

15

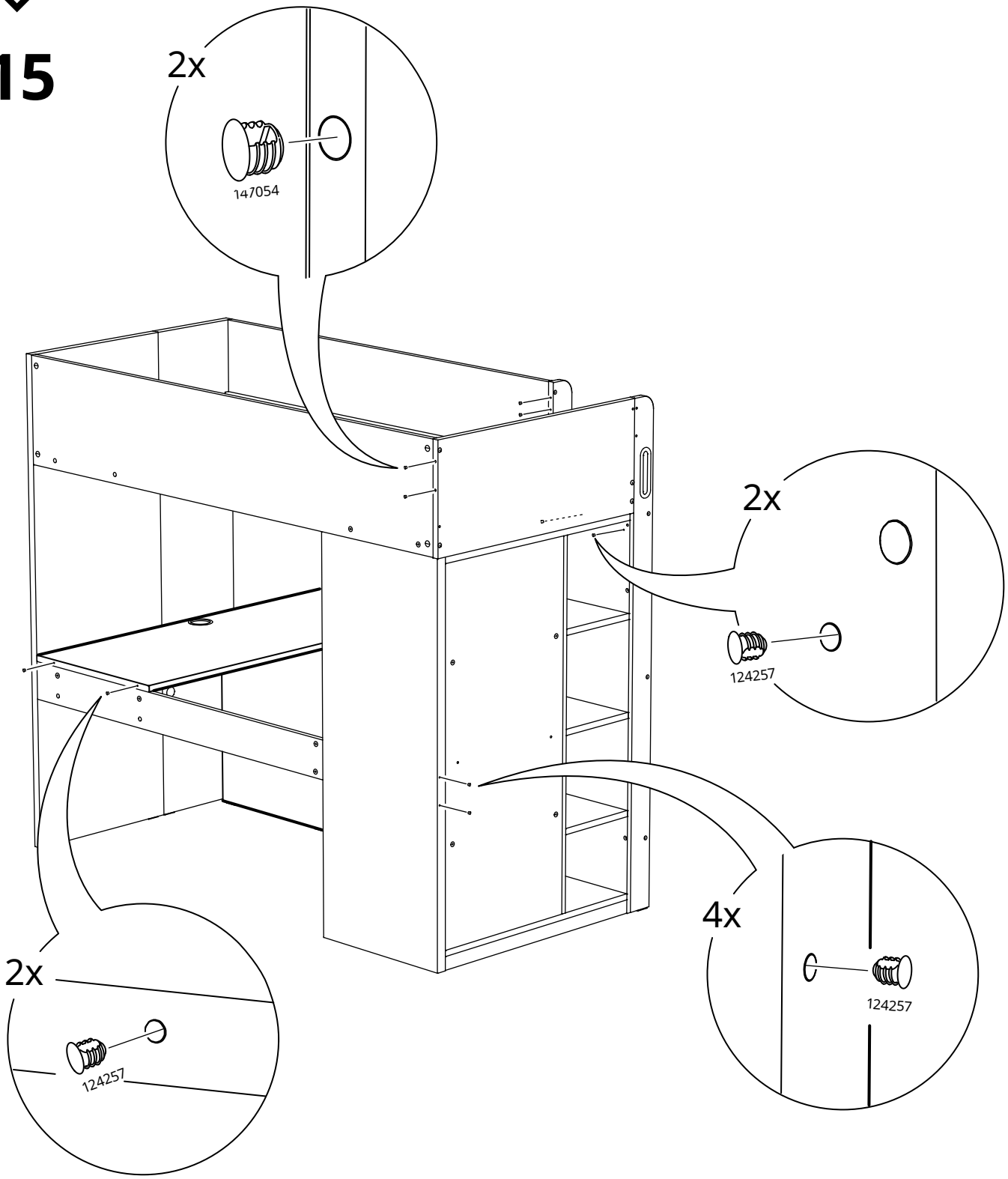

16

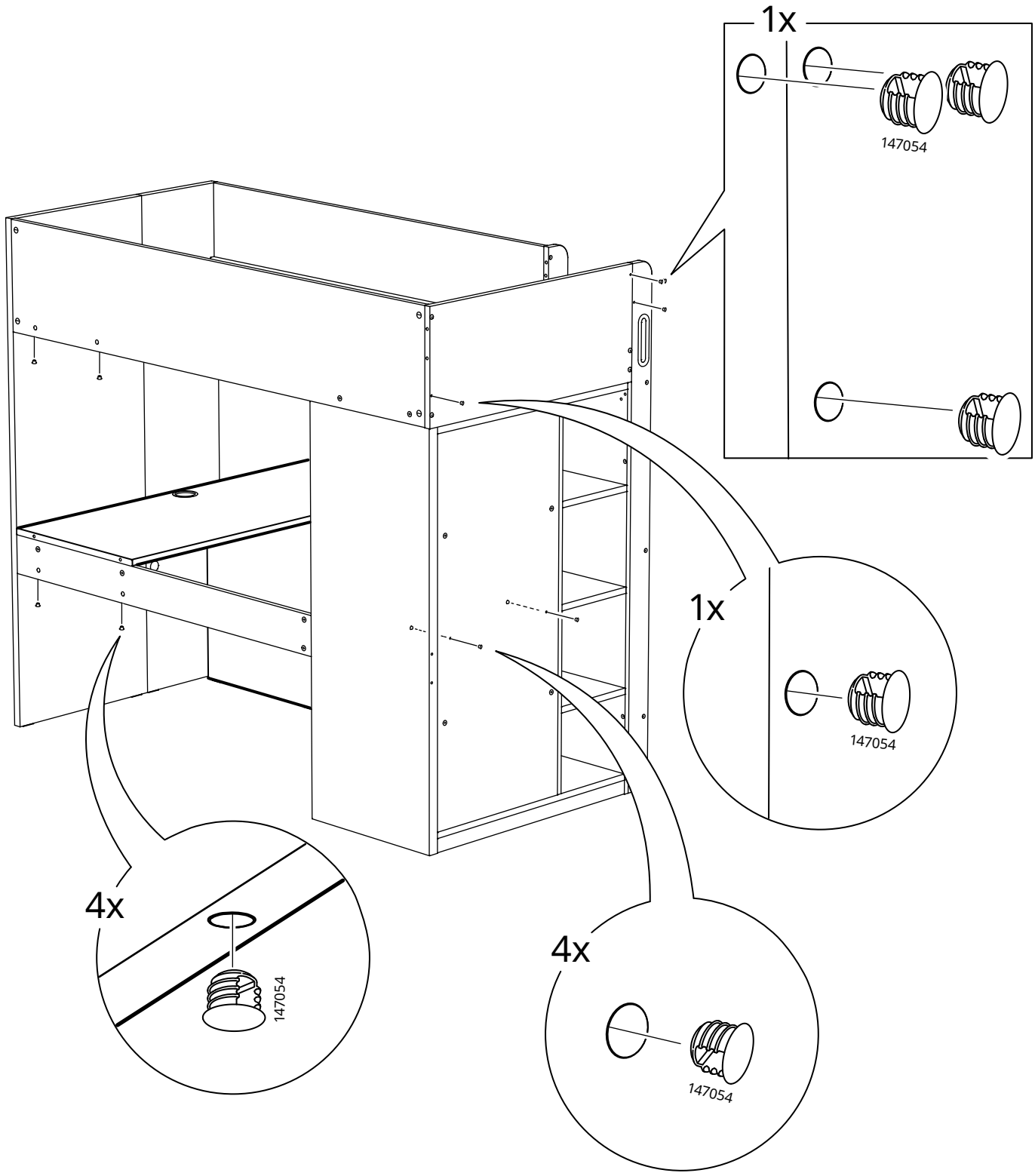

17

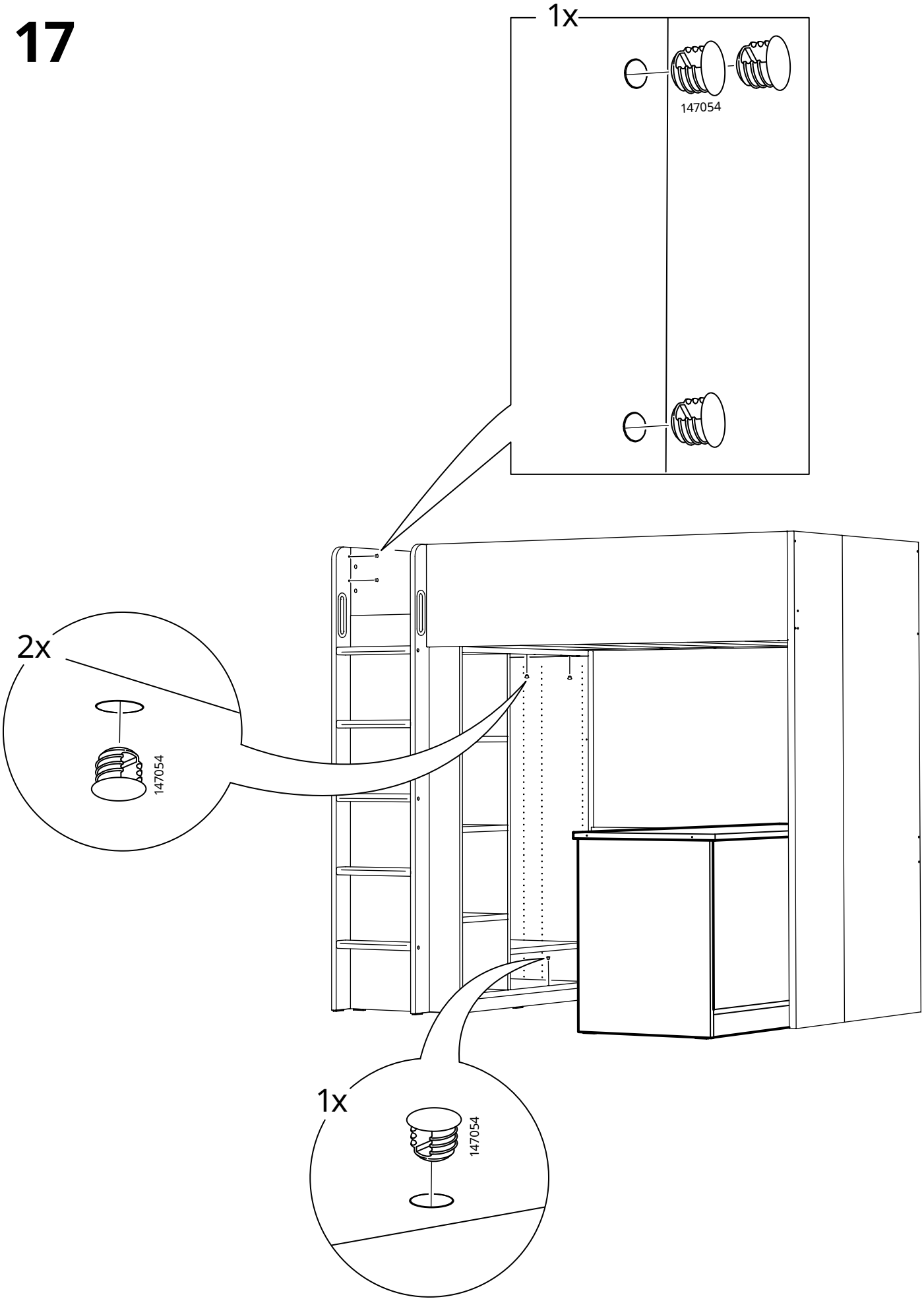

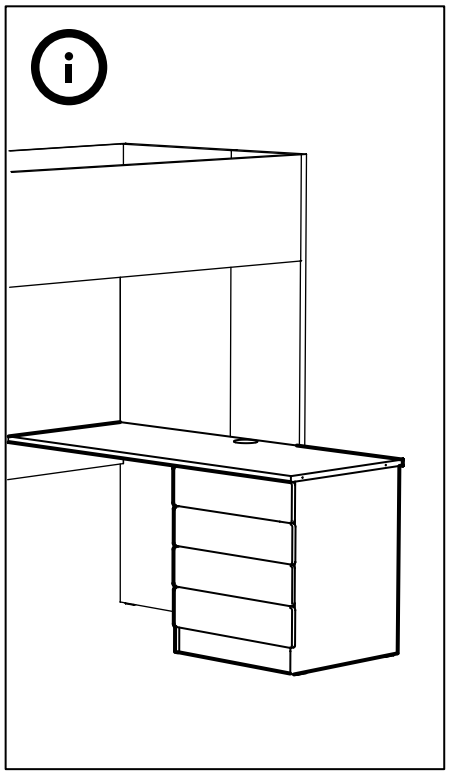

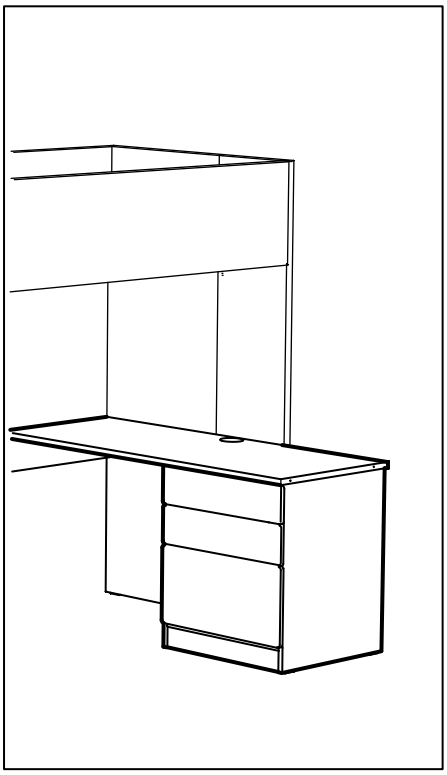

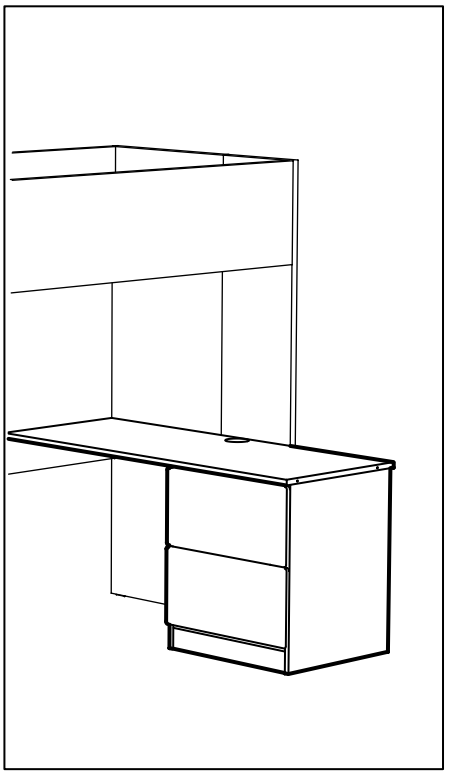

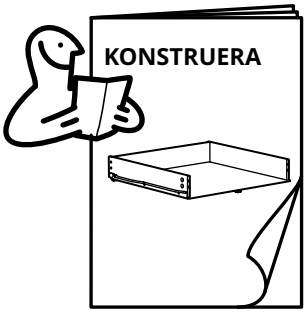
KONSTRUERA

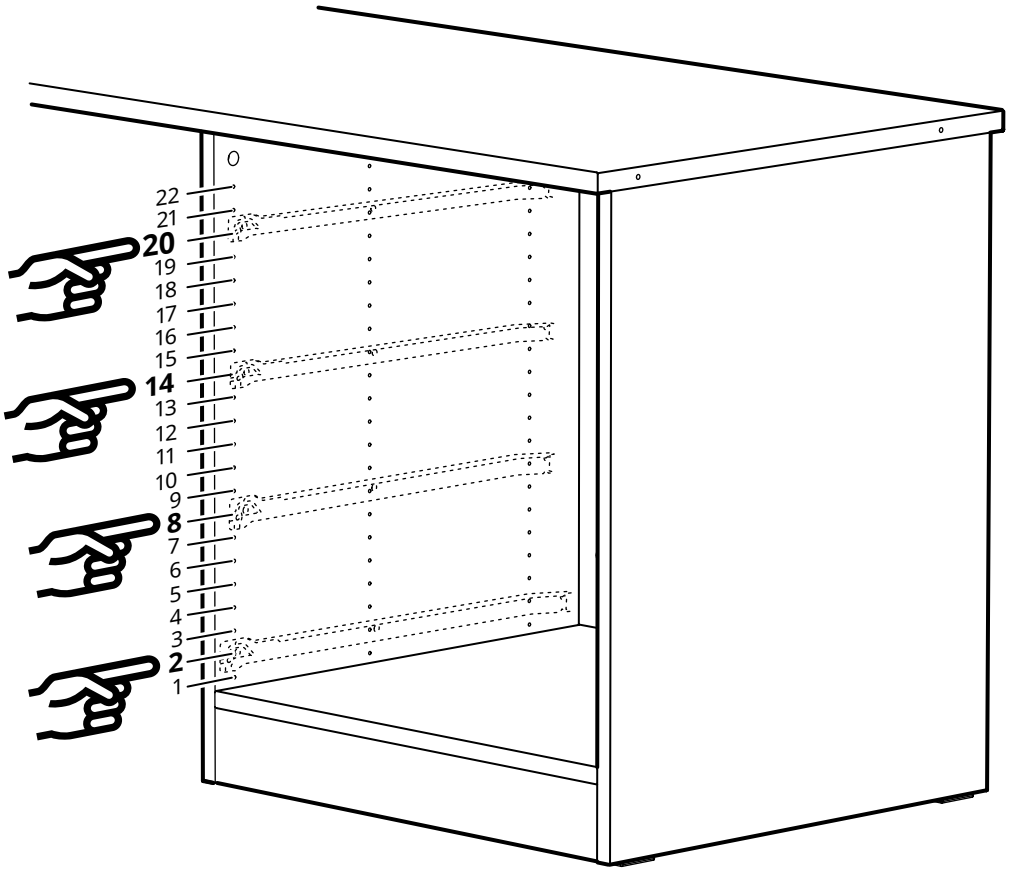
0
22
21
20
19
18
17
16
15
14
13
12
11
10
9
8
7
6
5
4
3
2
1

© Inter IKEA Systems B.V. 2019