IVAR

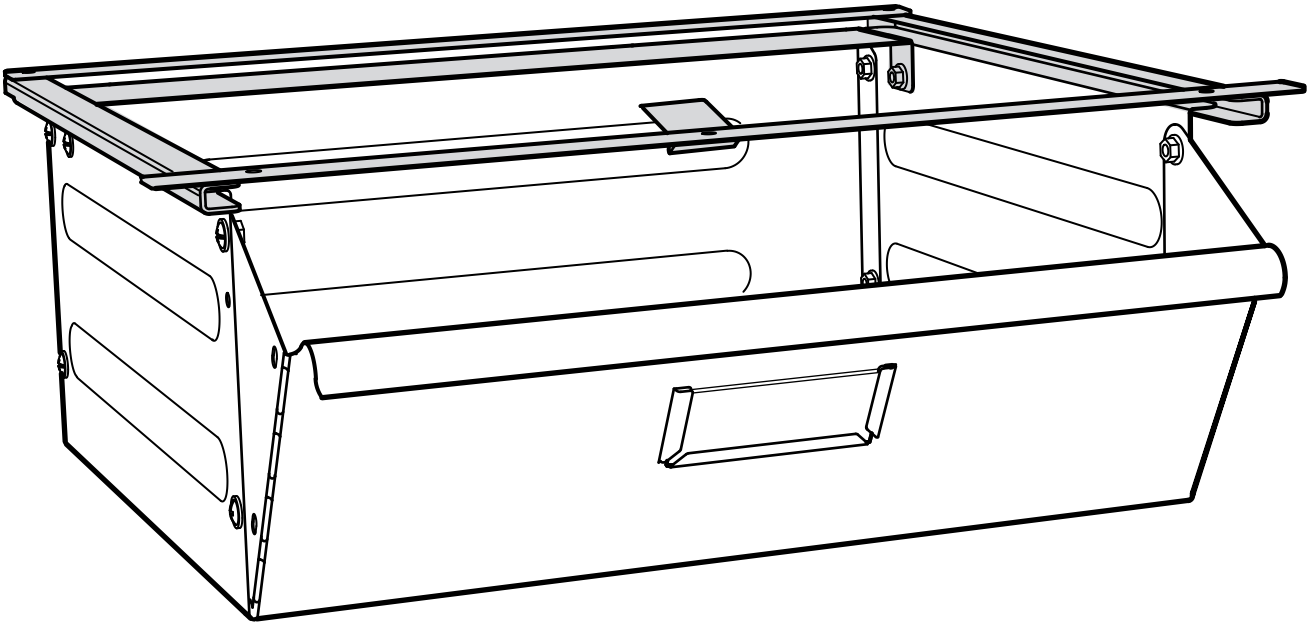

Design and Quality
IKEA of Sweden

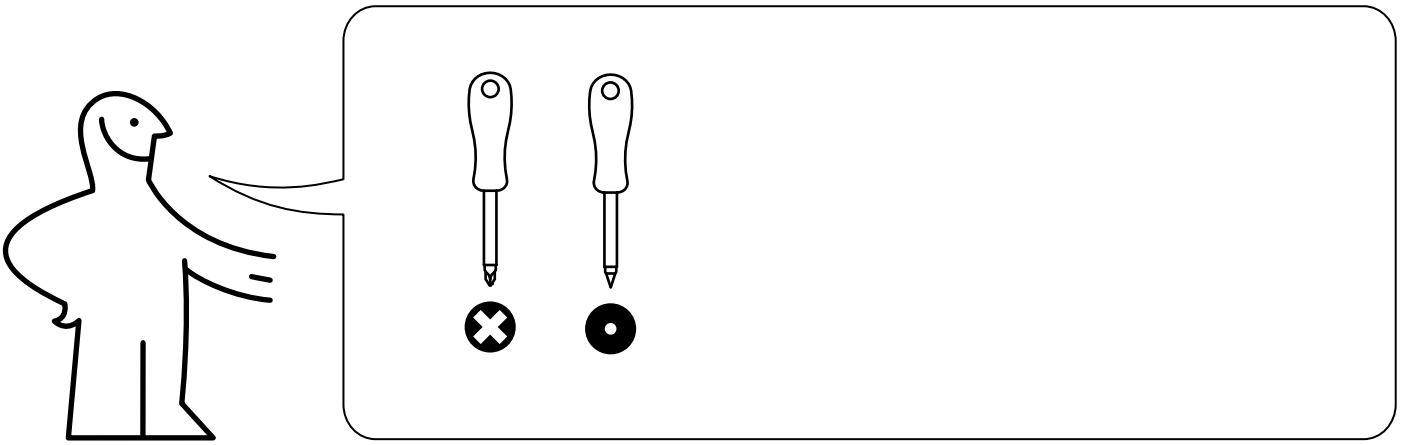

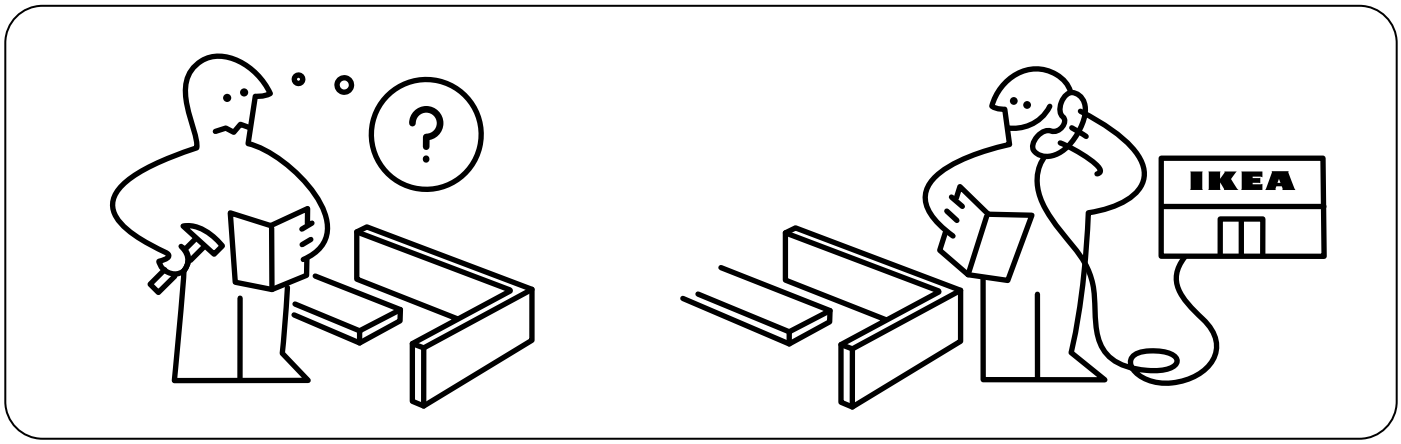

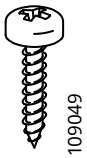
109049

5x

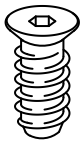
139237

2x

147042

10x

147043

10x

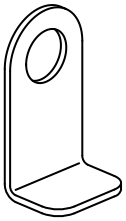
146119

2x

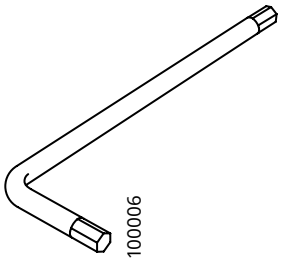
100006

1x

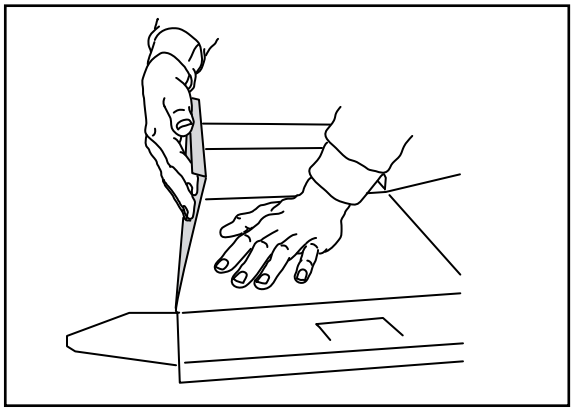

1

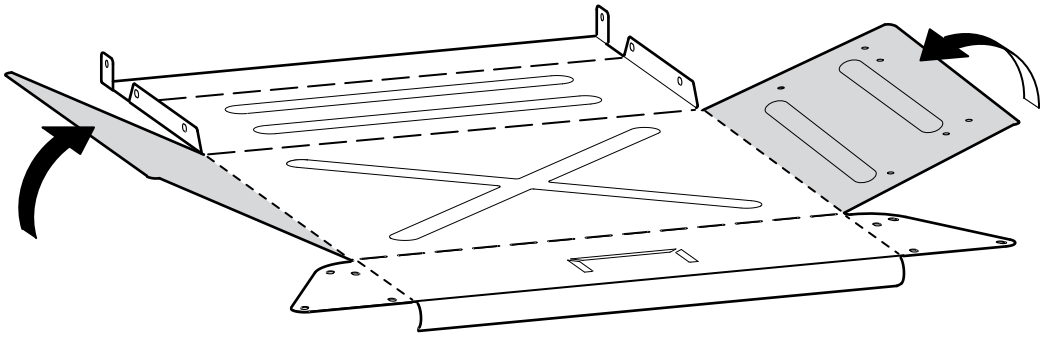

2

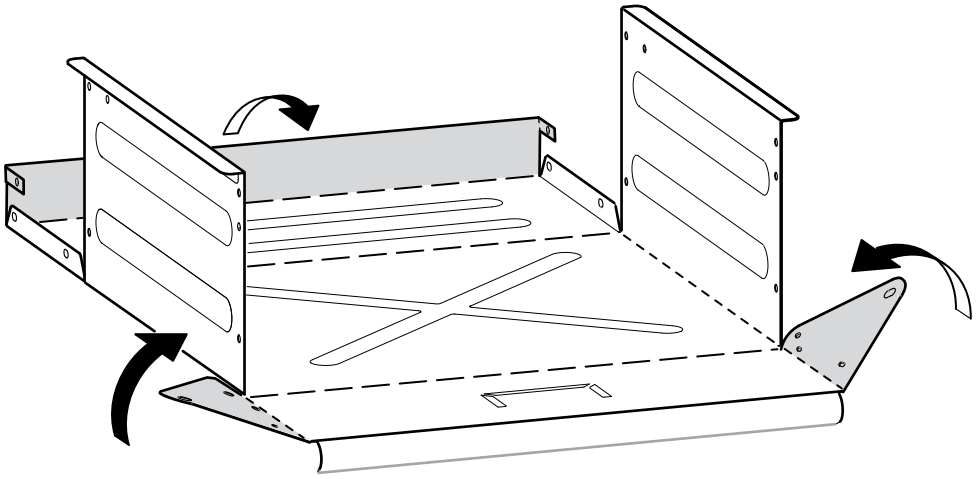

3

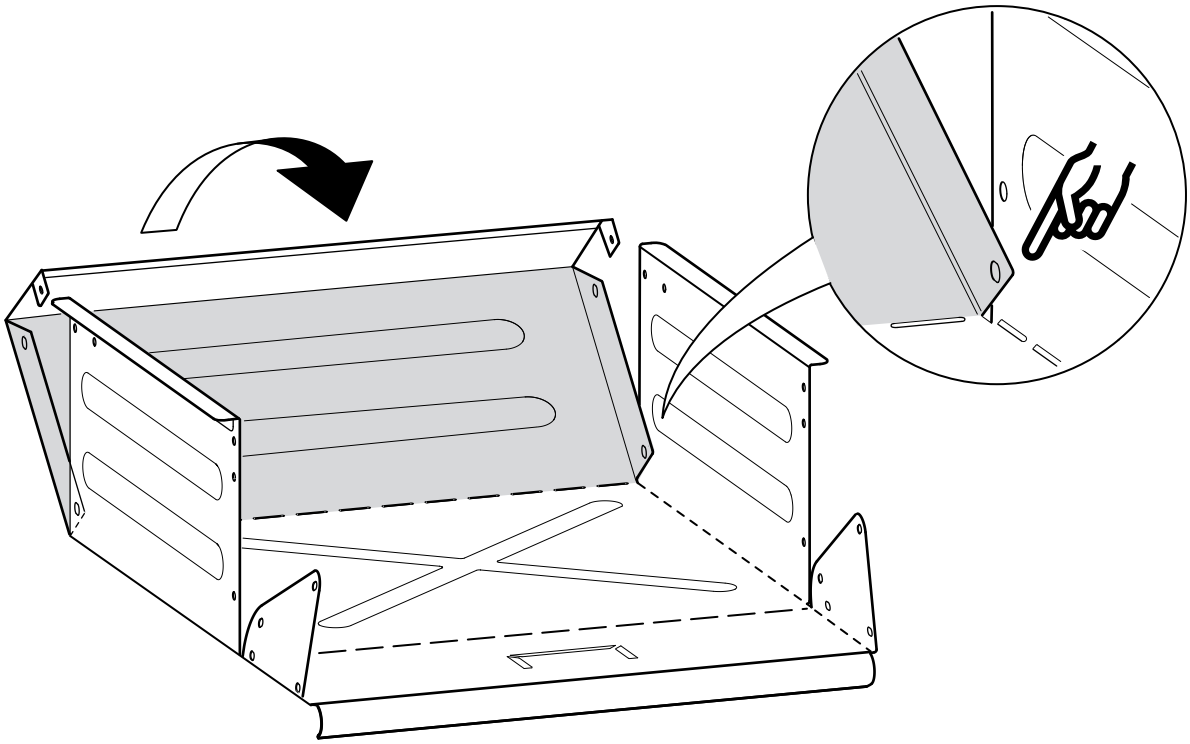

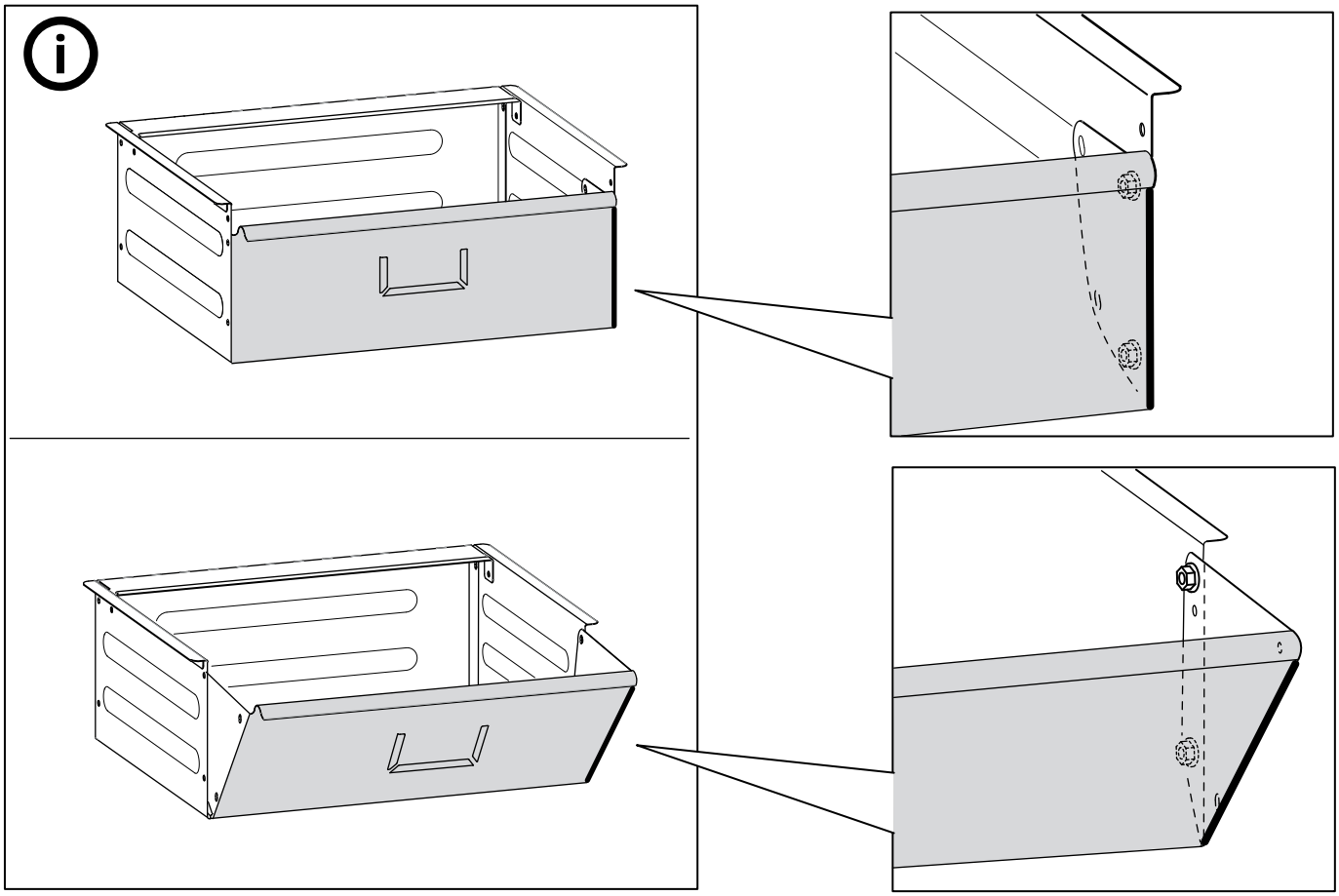

4

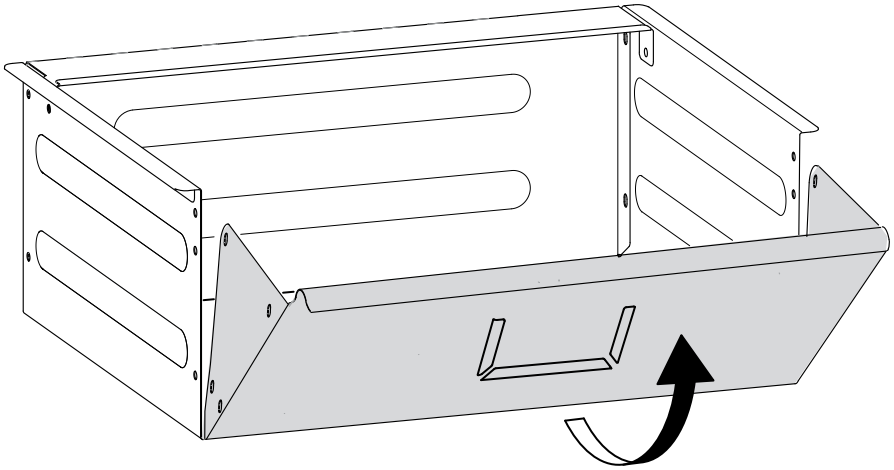

5

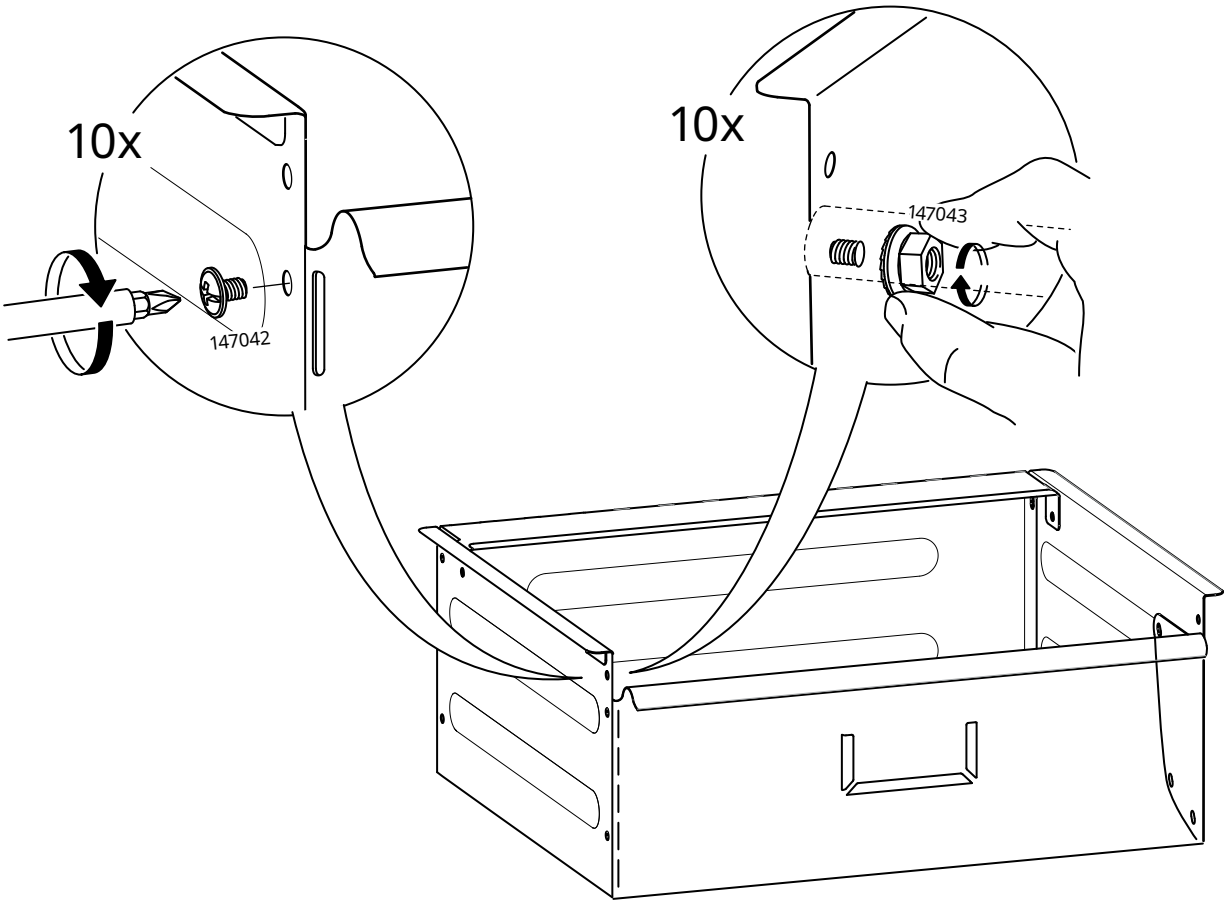

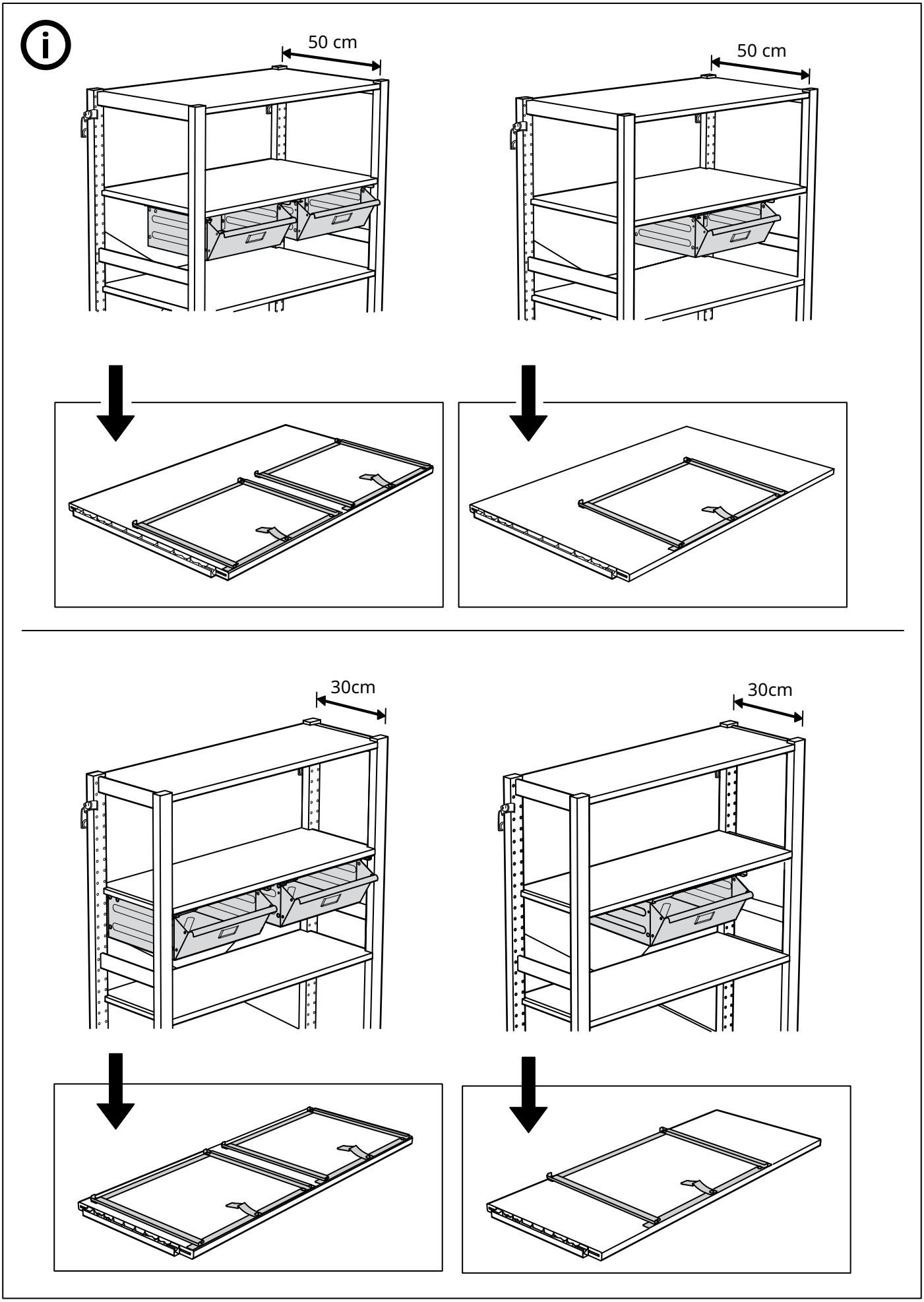
50 cm
50 cm
30cm
30cm

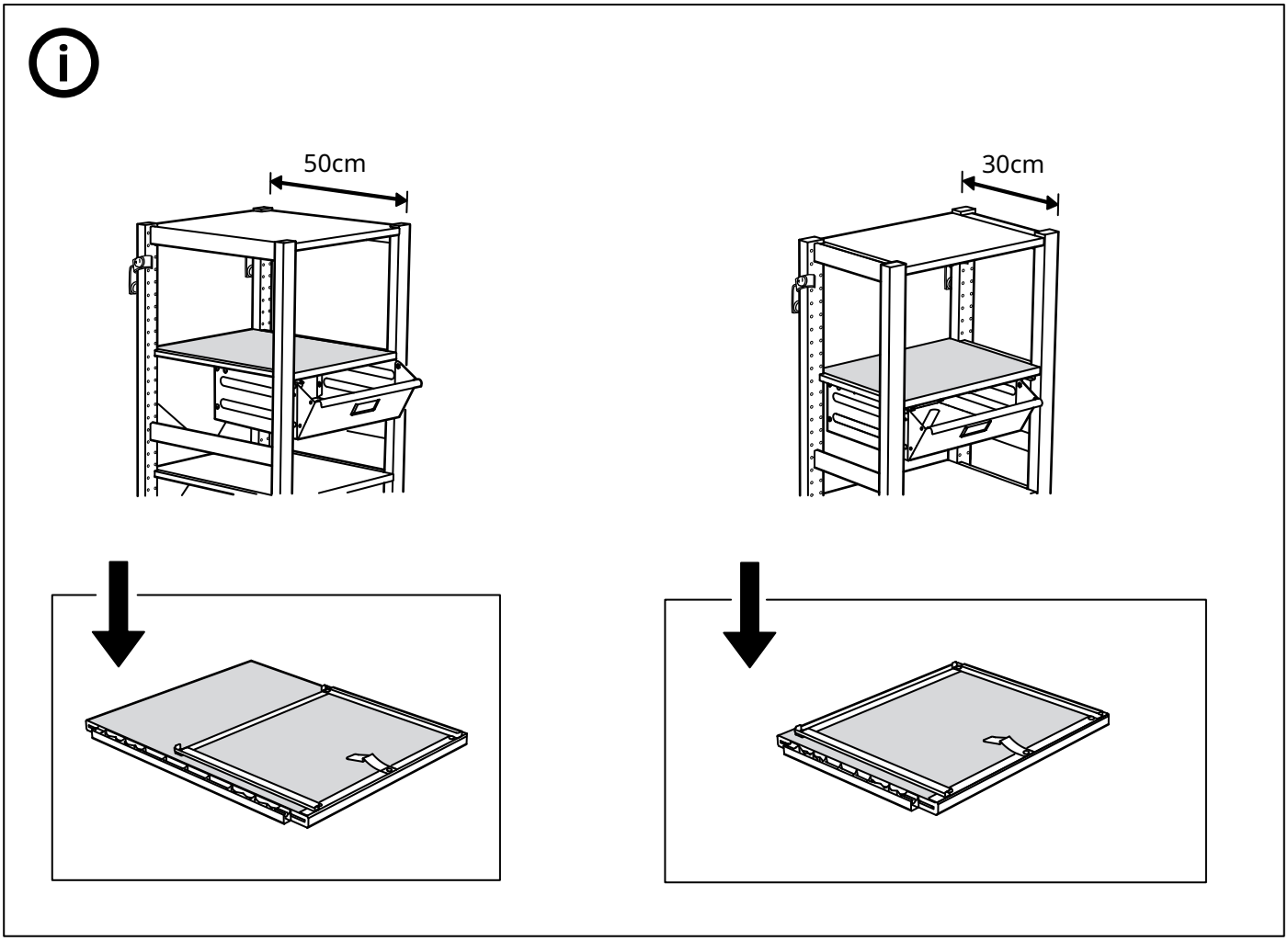
50cm
30cm

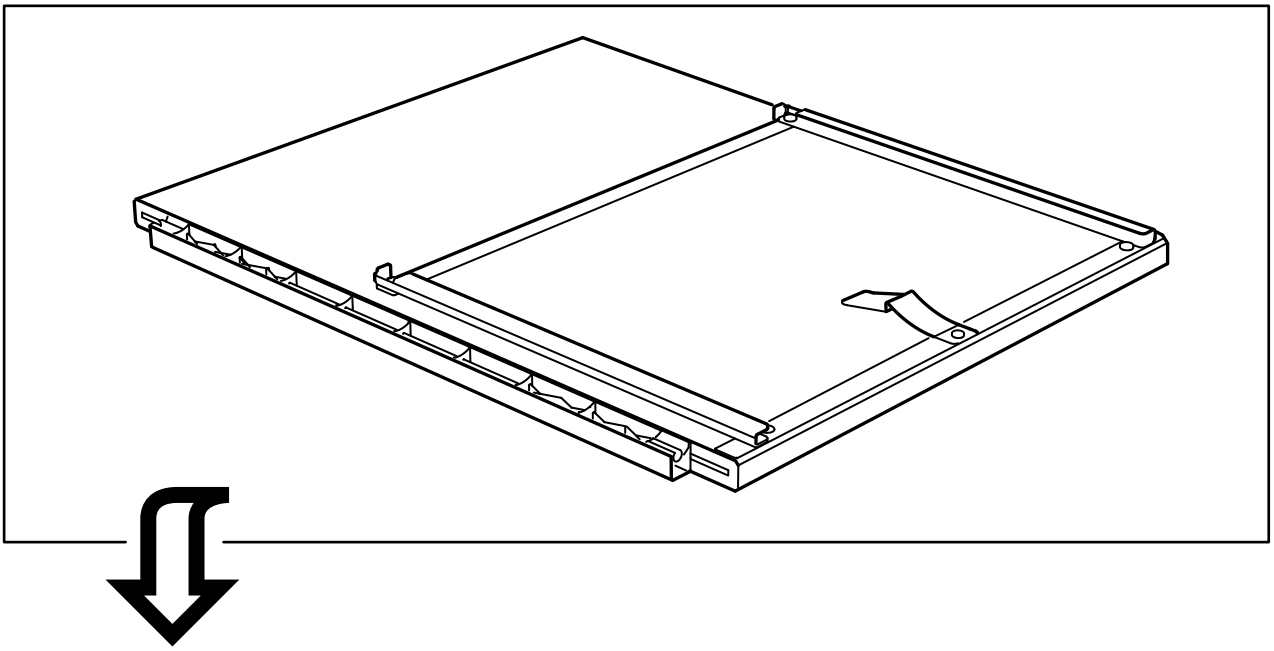

6

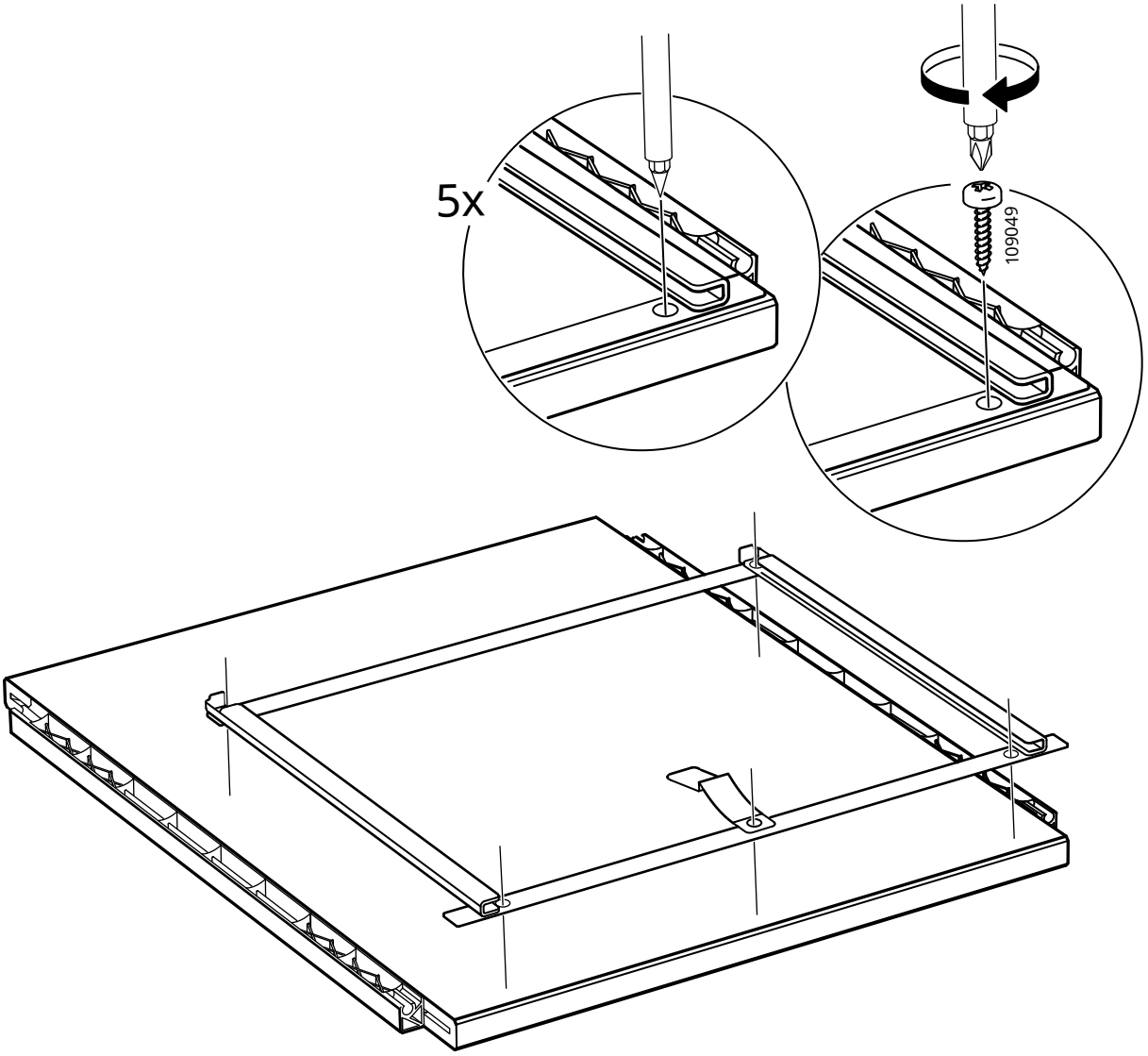

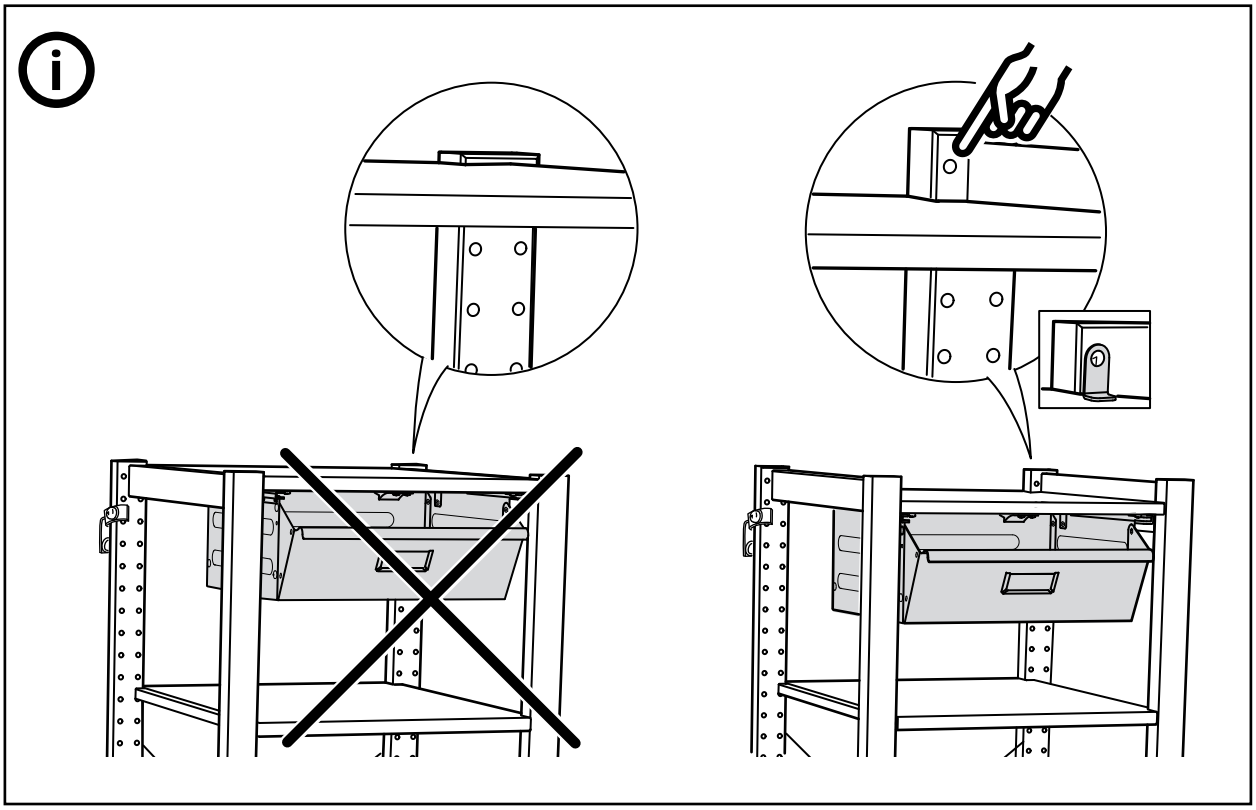

7

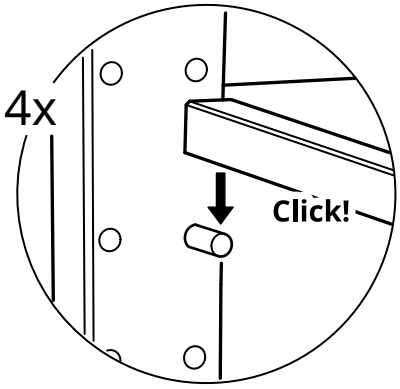

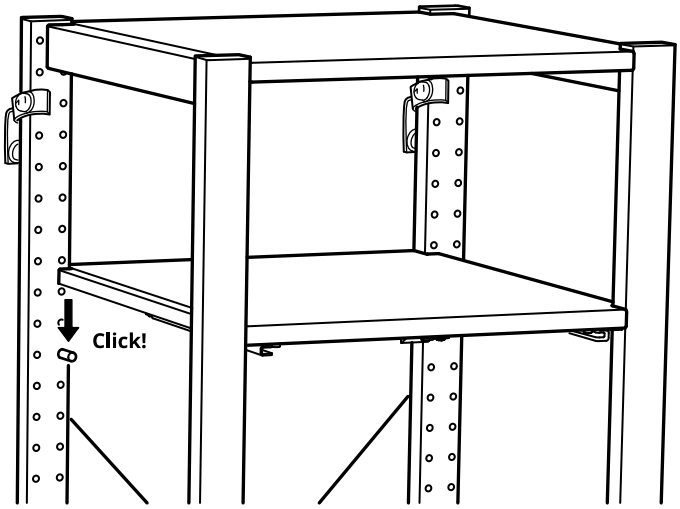

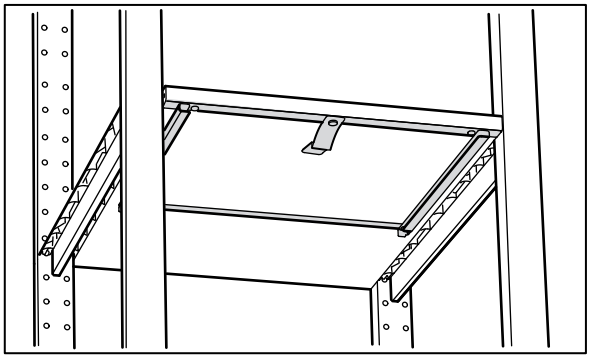

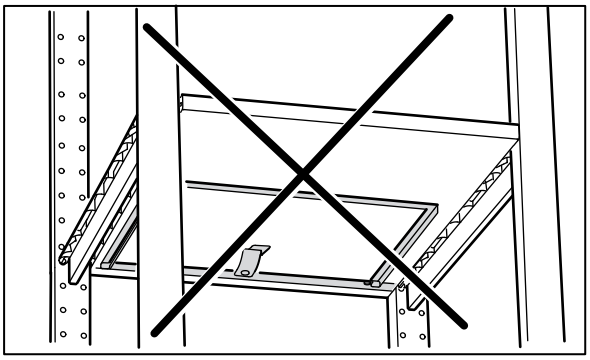

8

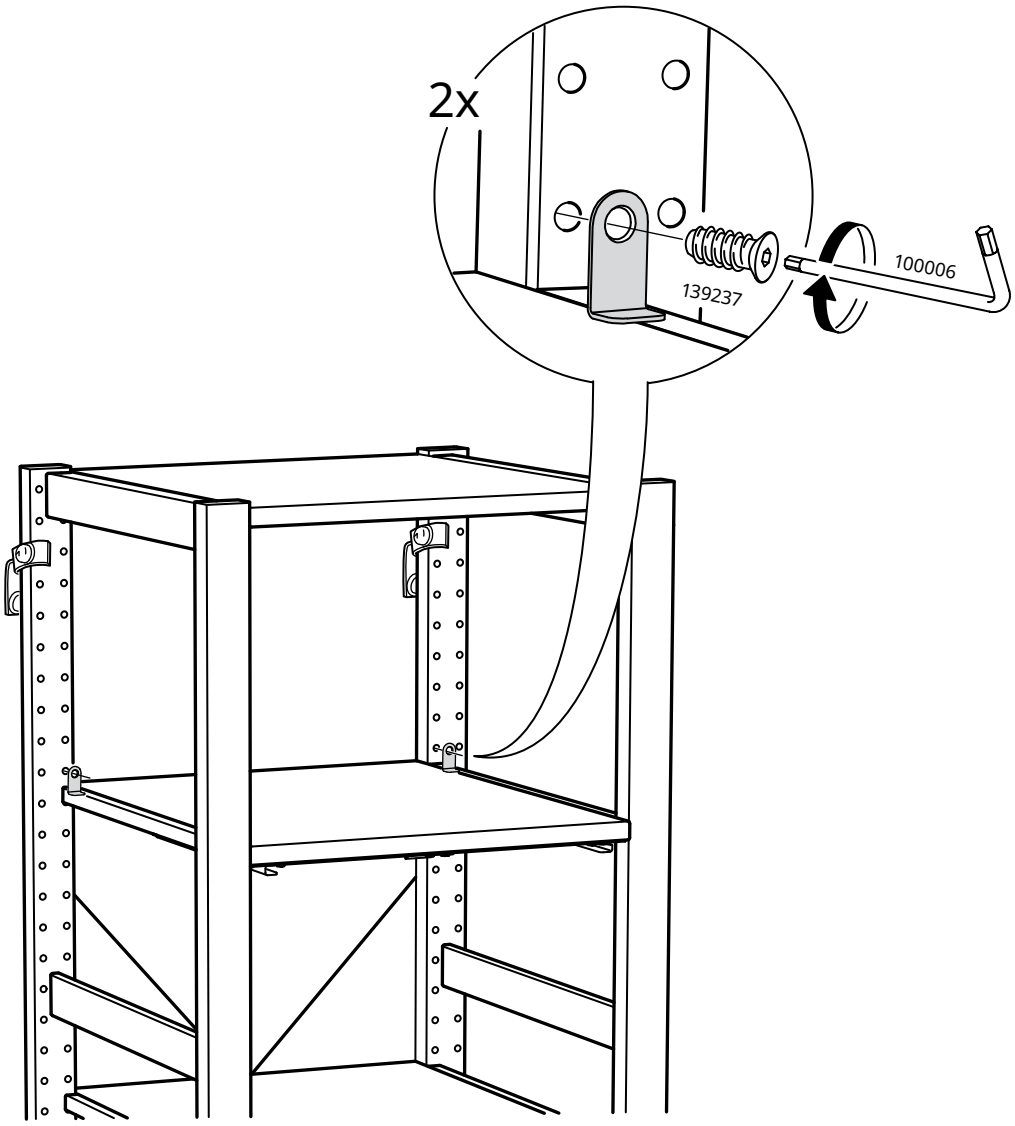

9

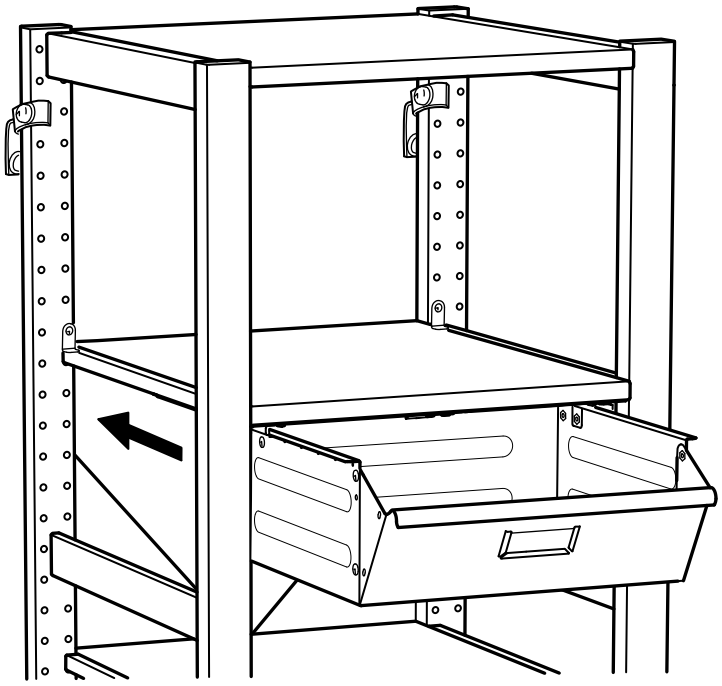

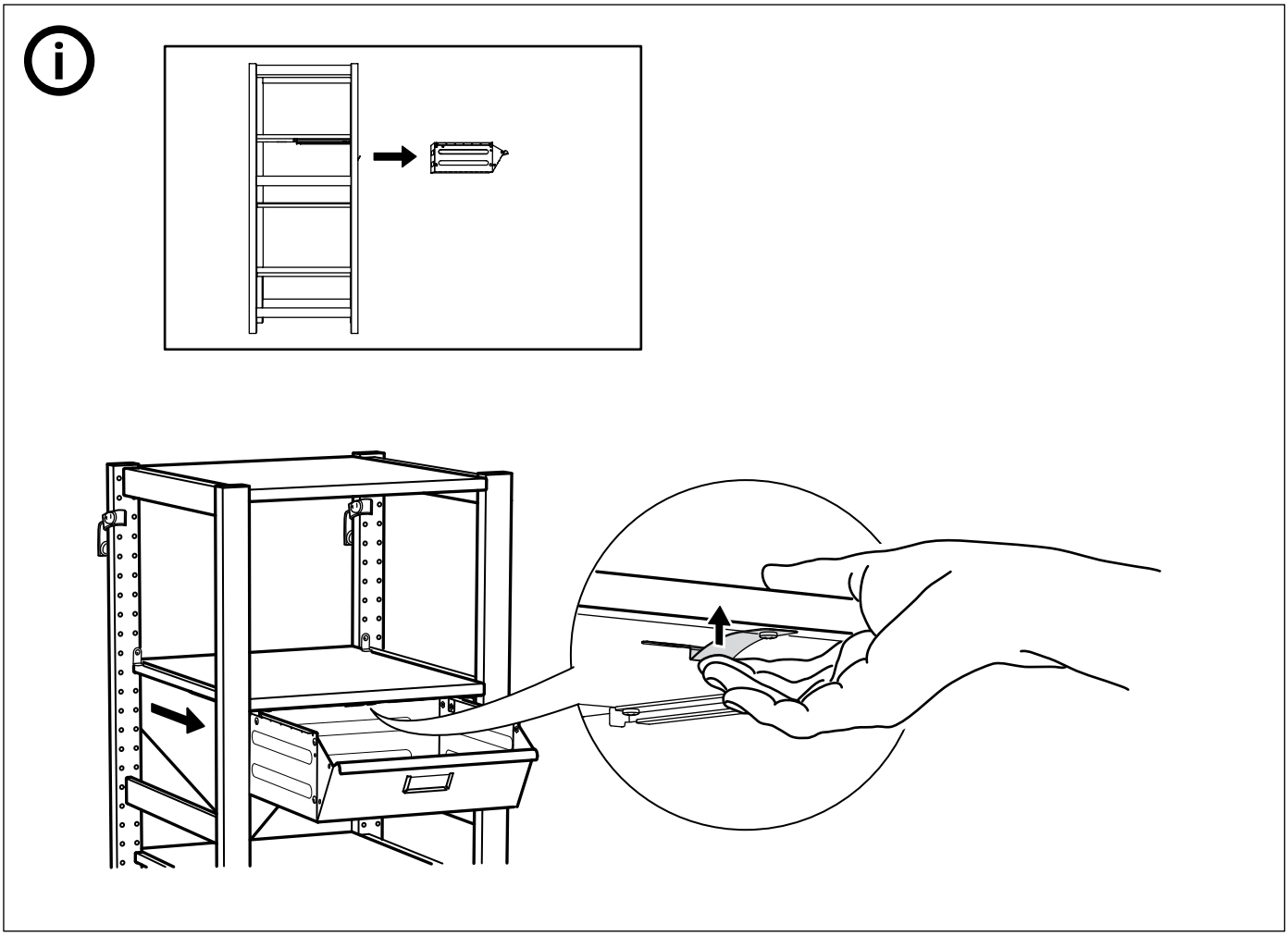

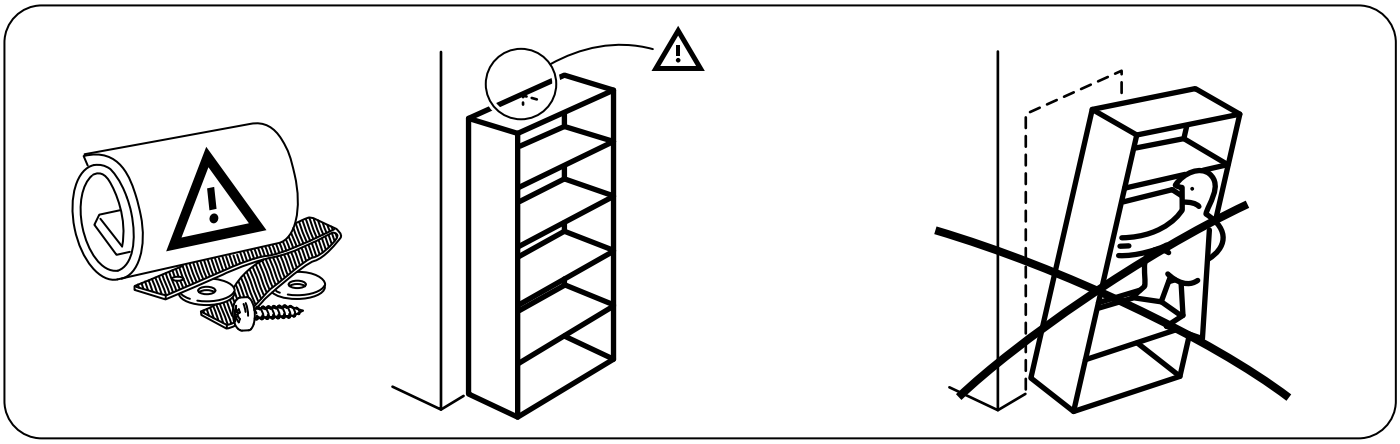

© Inter IKEA Systems B.V. 2015
2015-04-15 AA-1627600-3