HEMNES

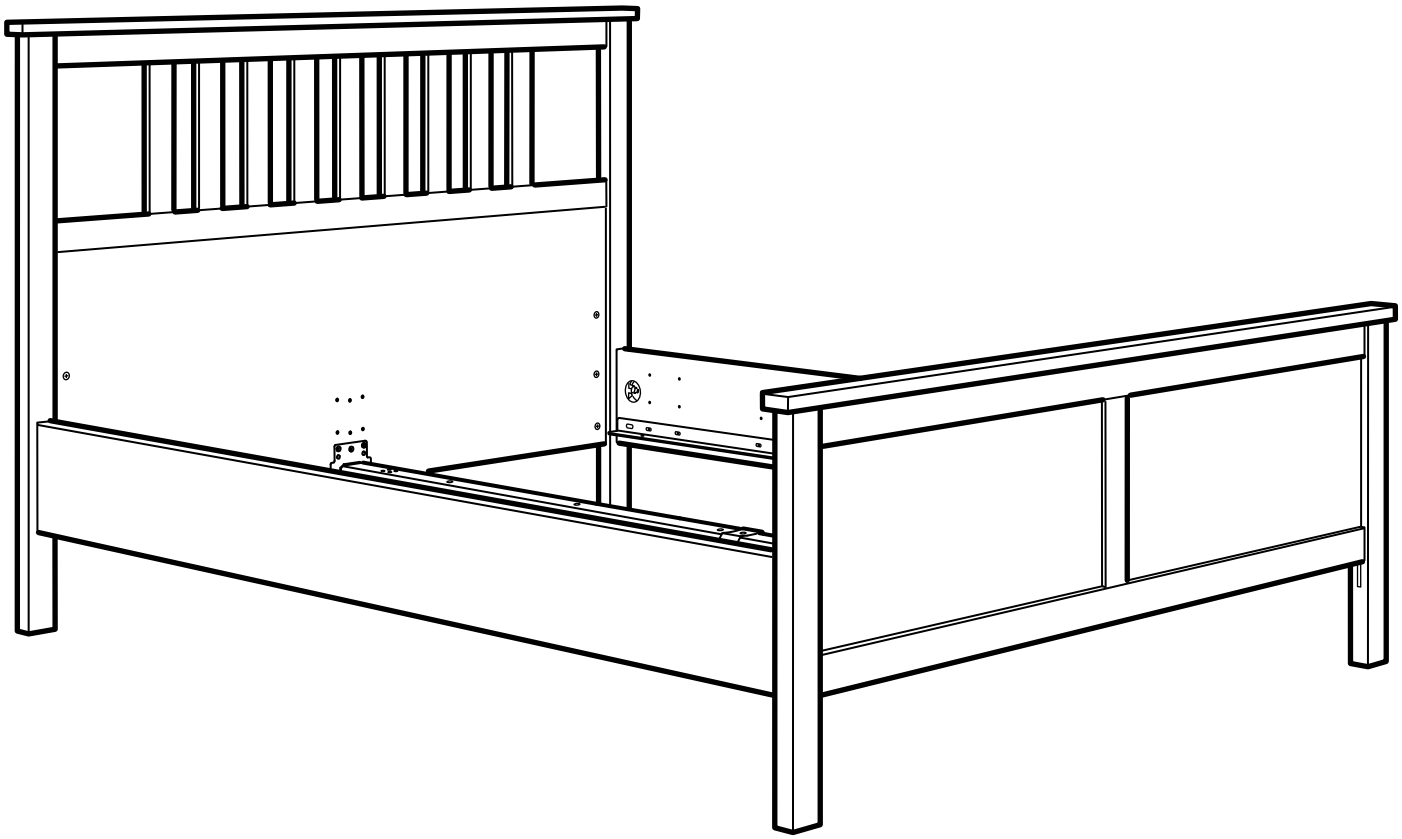

Design and Quality
IKEA of Sweden

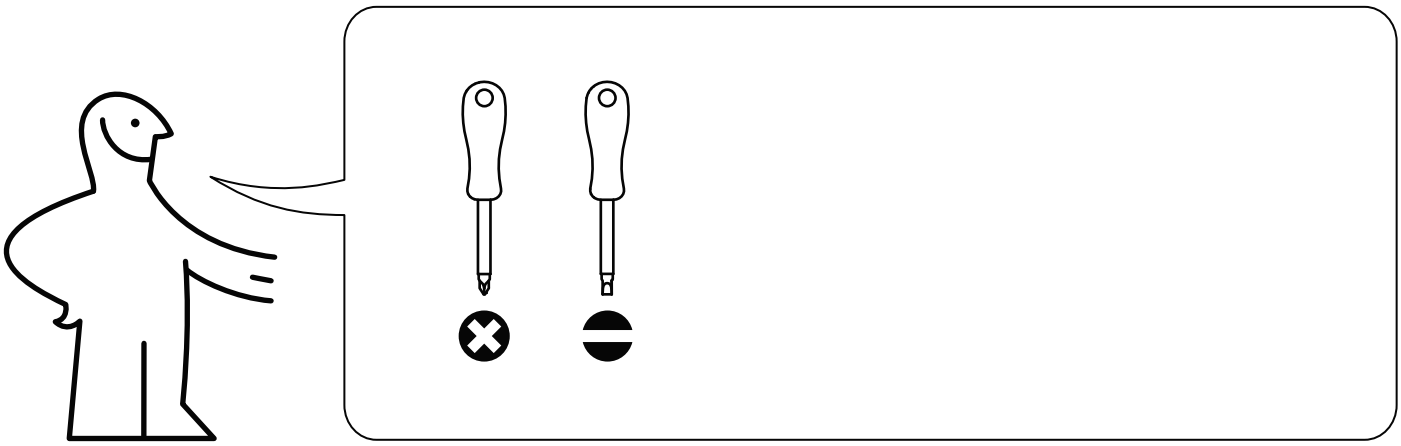

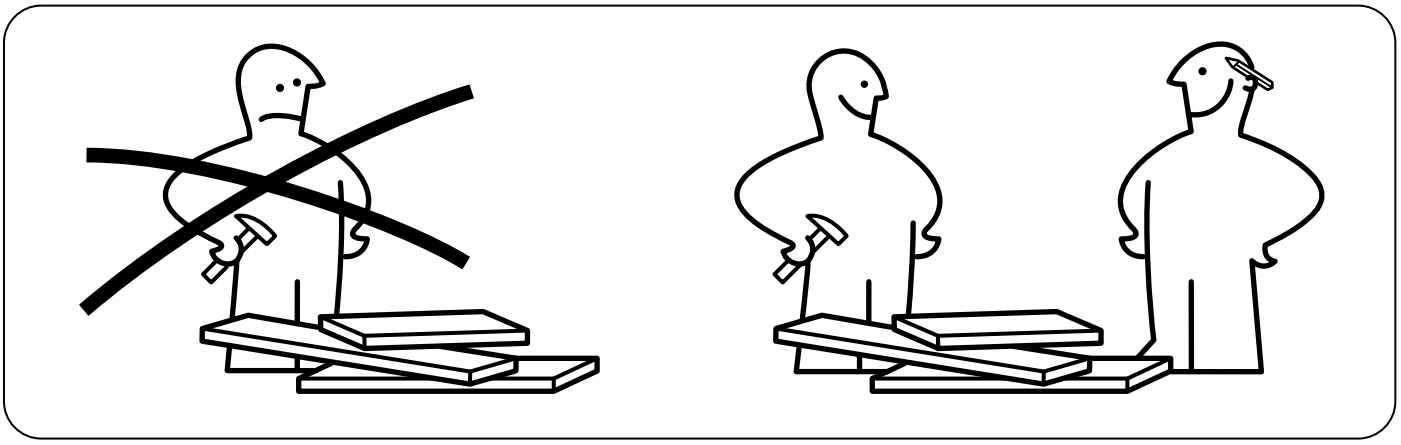

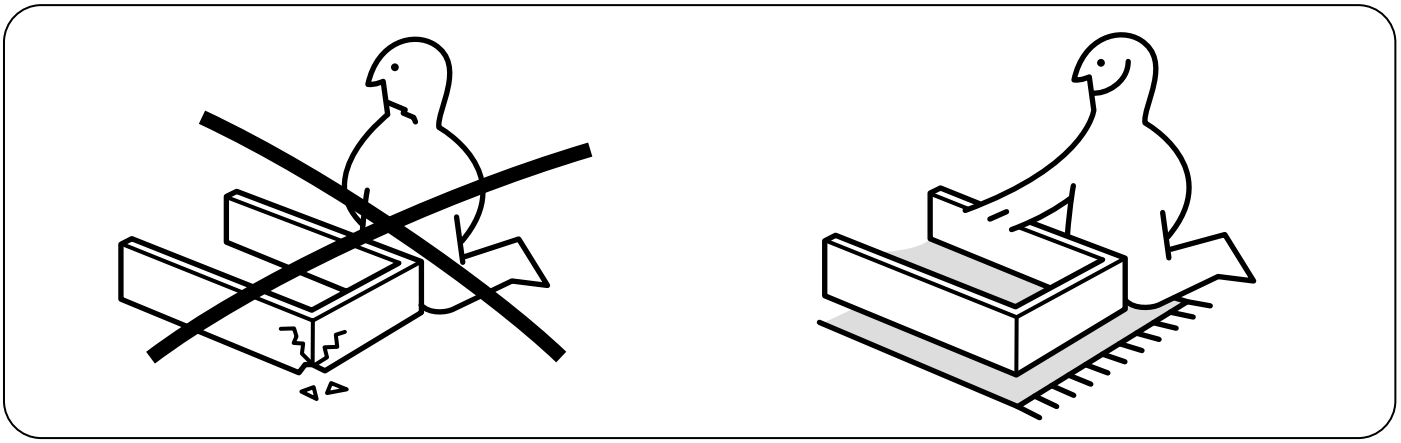

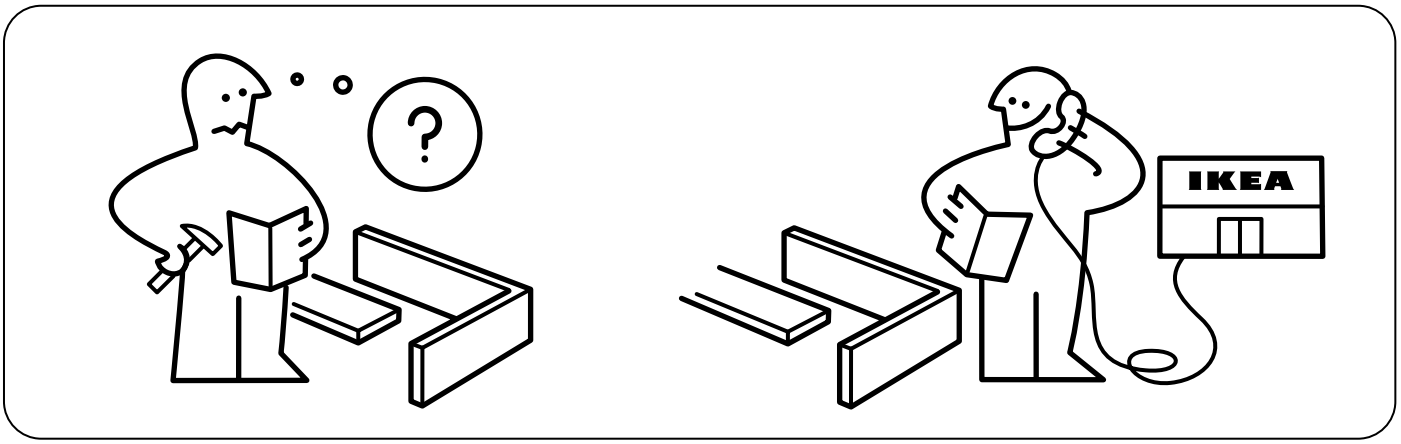

AA-1892549-2

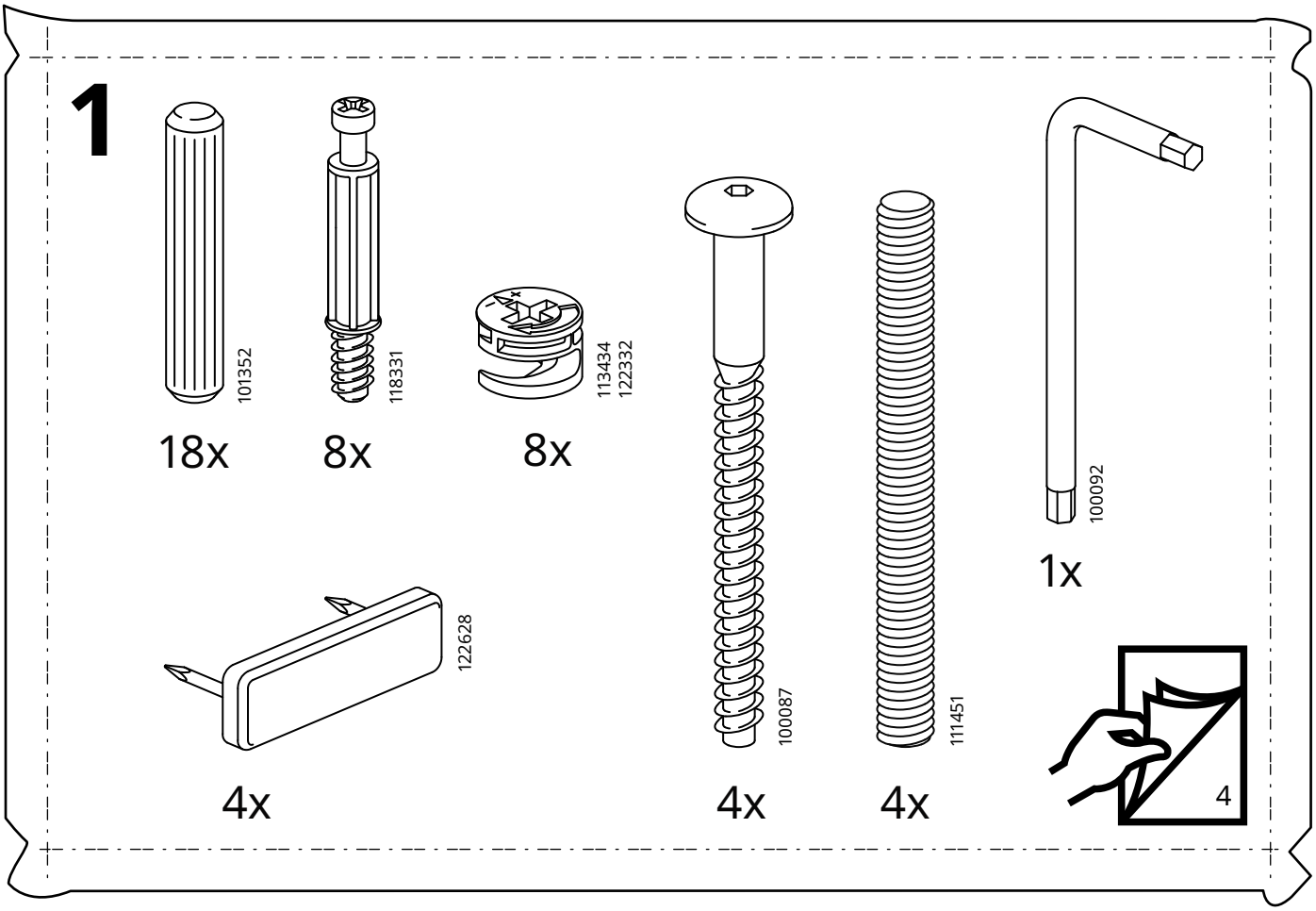
1
101352
18x
118331
8x
113434
122332
8x
100087
4x
111451
4x
100092
1x
122628
4x
4

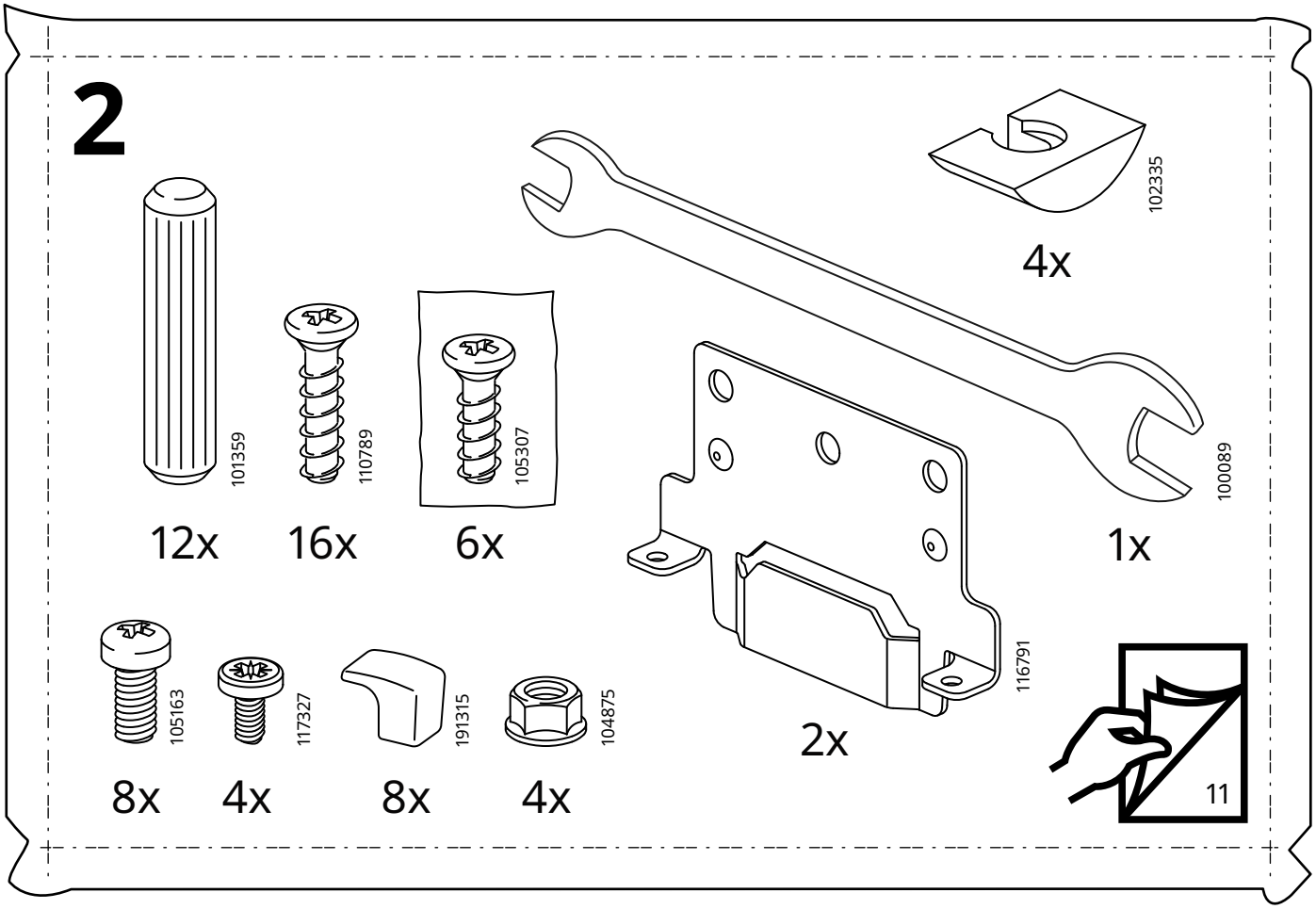
2
101359
12x
110789
16x
105307
6x
102335
4x
100089
1x
116791
2x
105163
8x
117327
4x
191315
8x
104875
4x
11

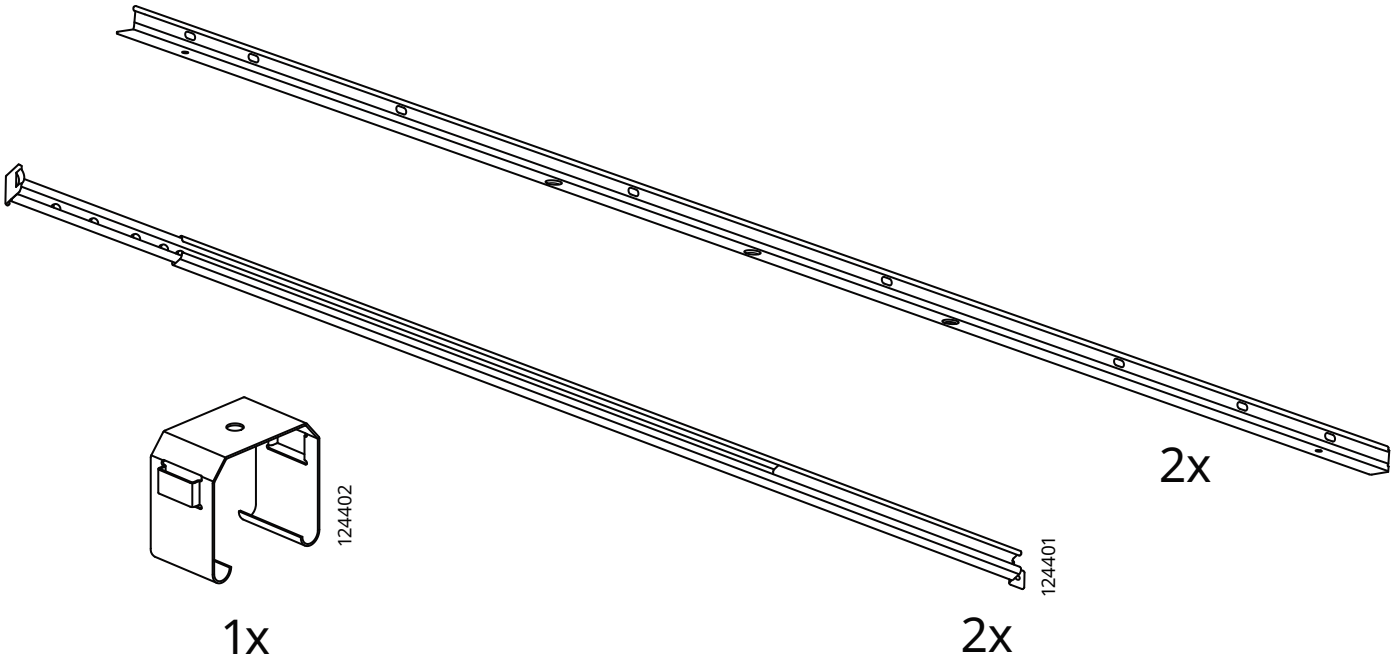

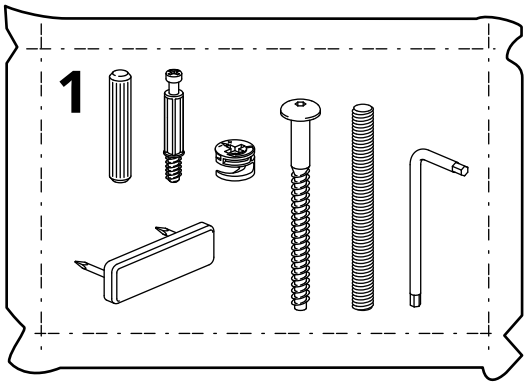

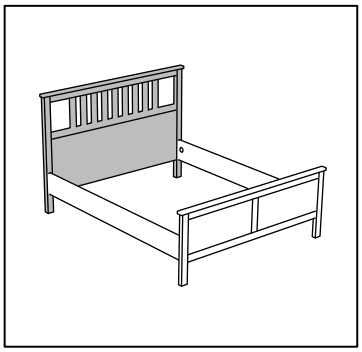

1

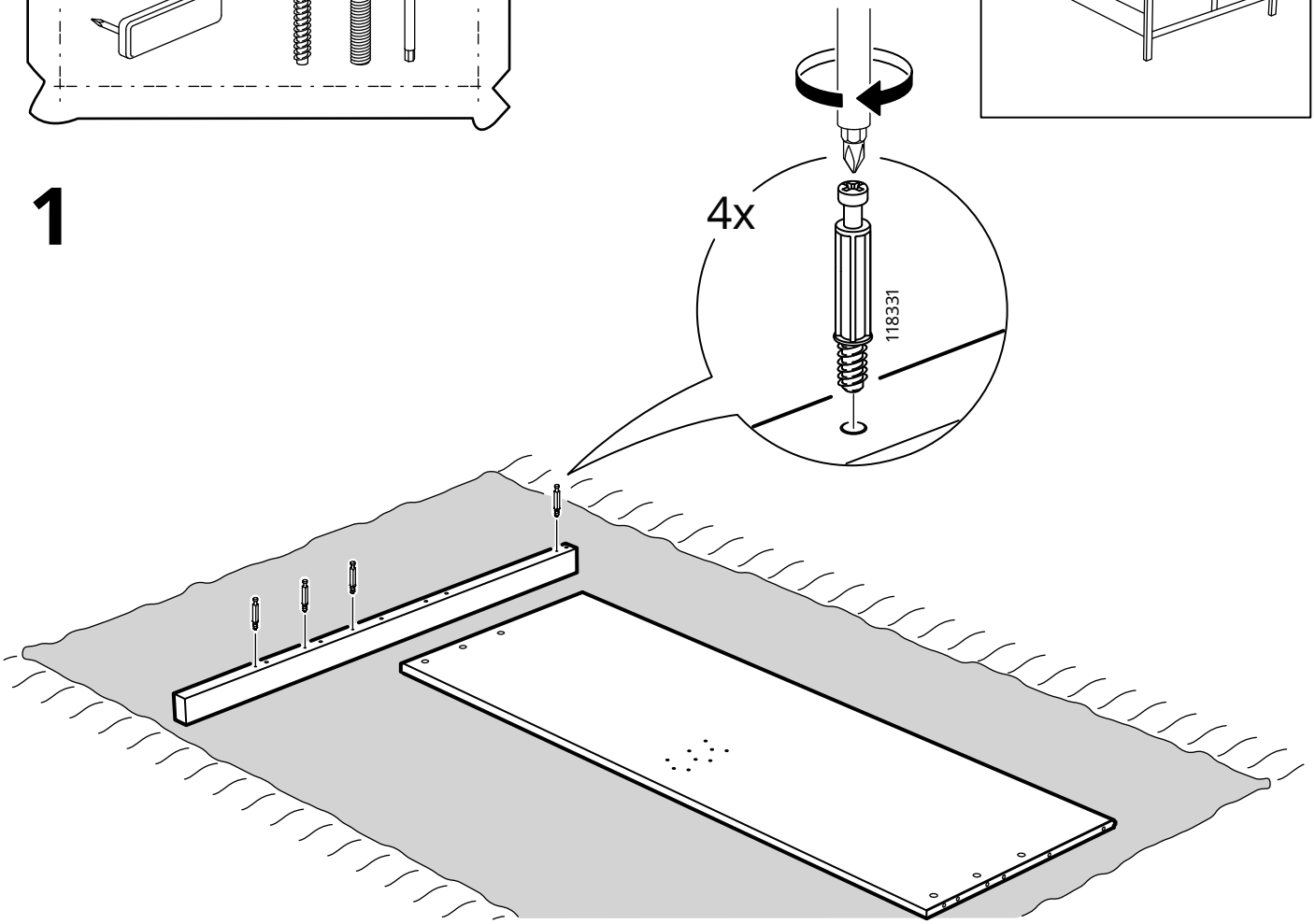

2

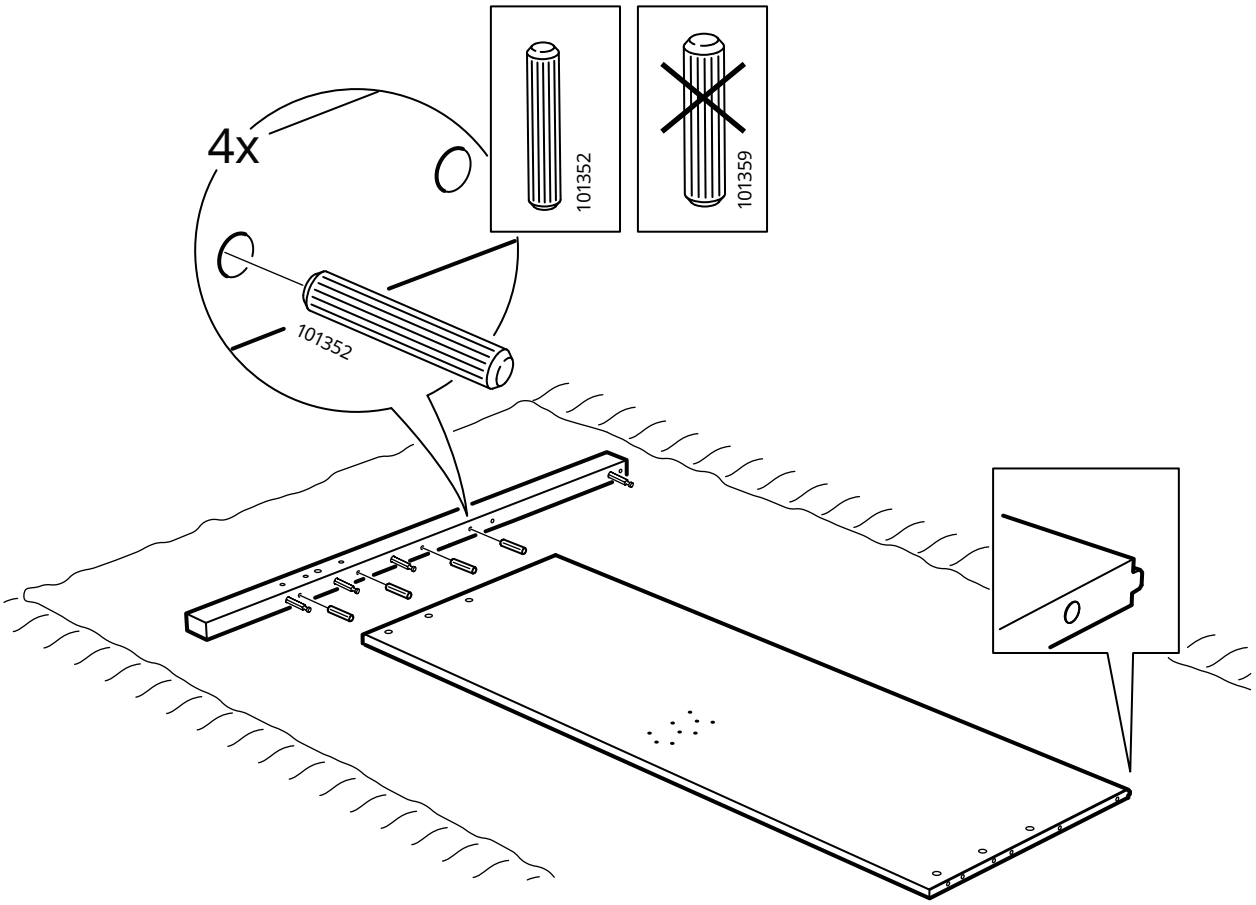

3

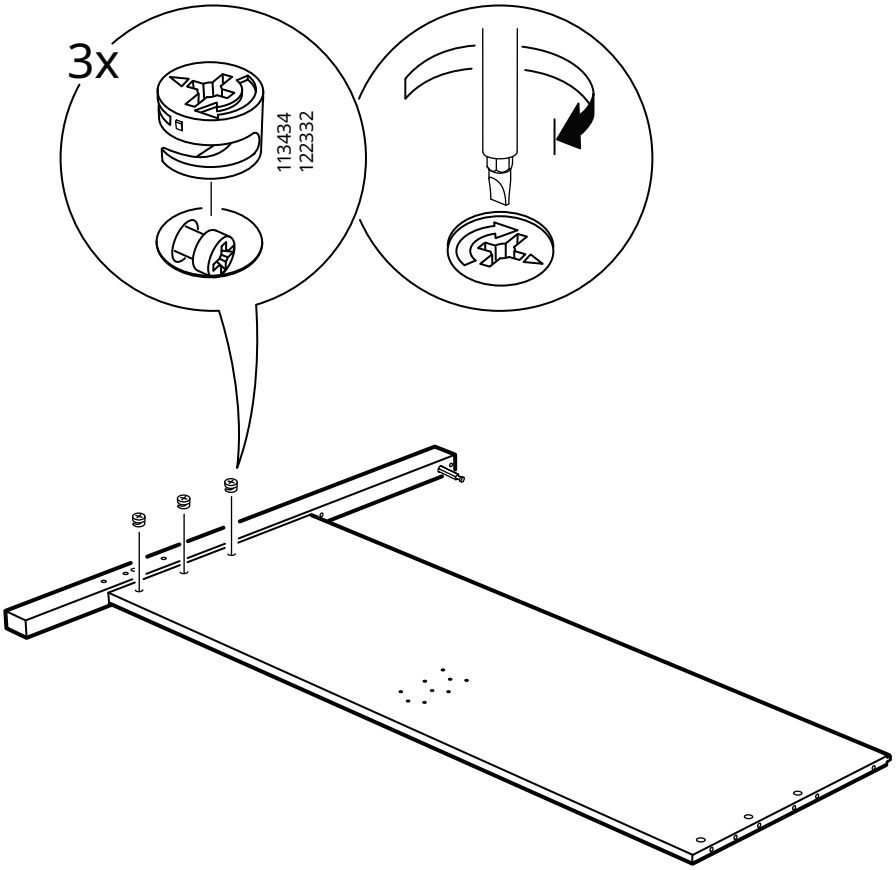

4

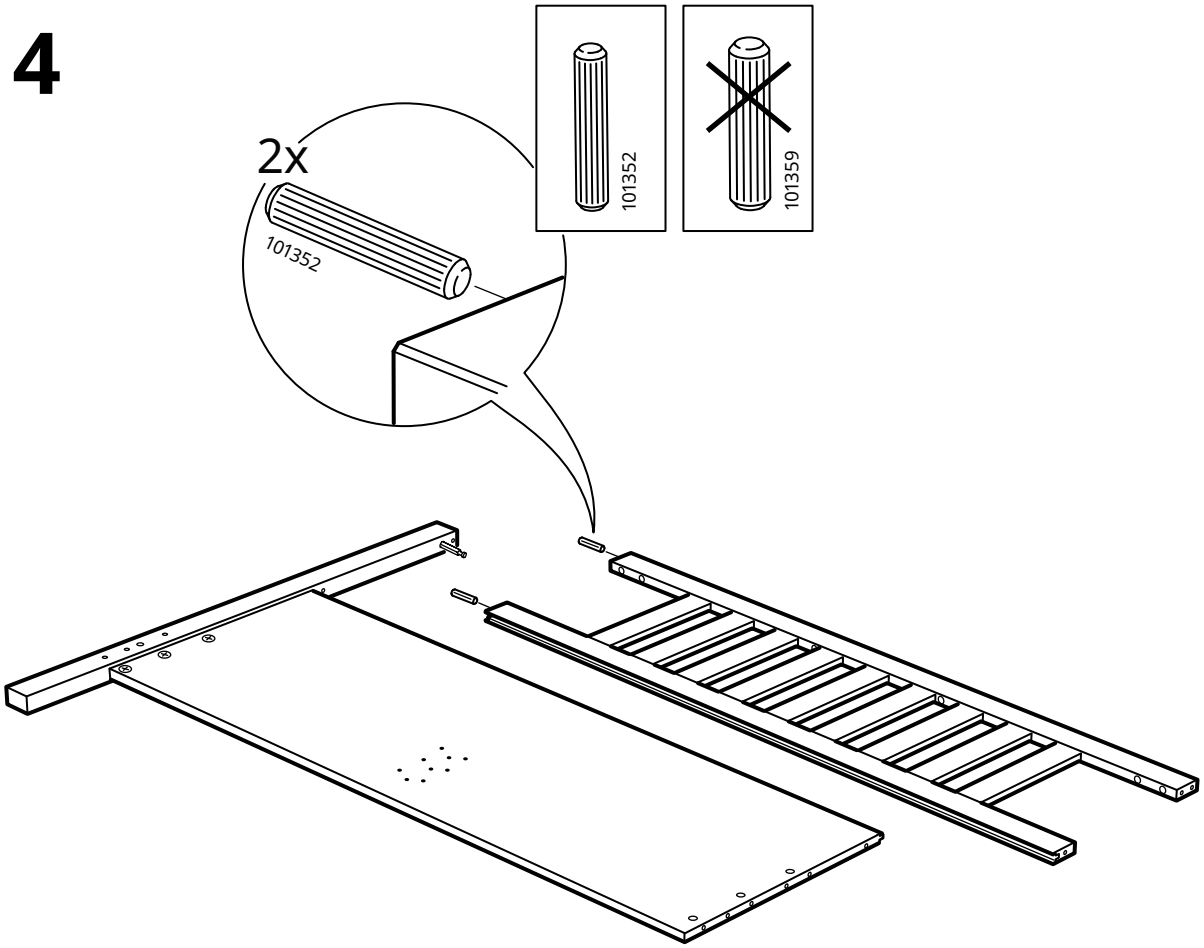

5

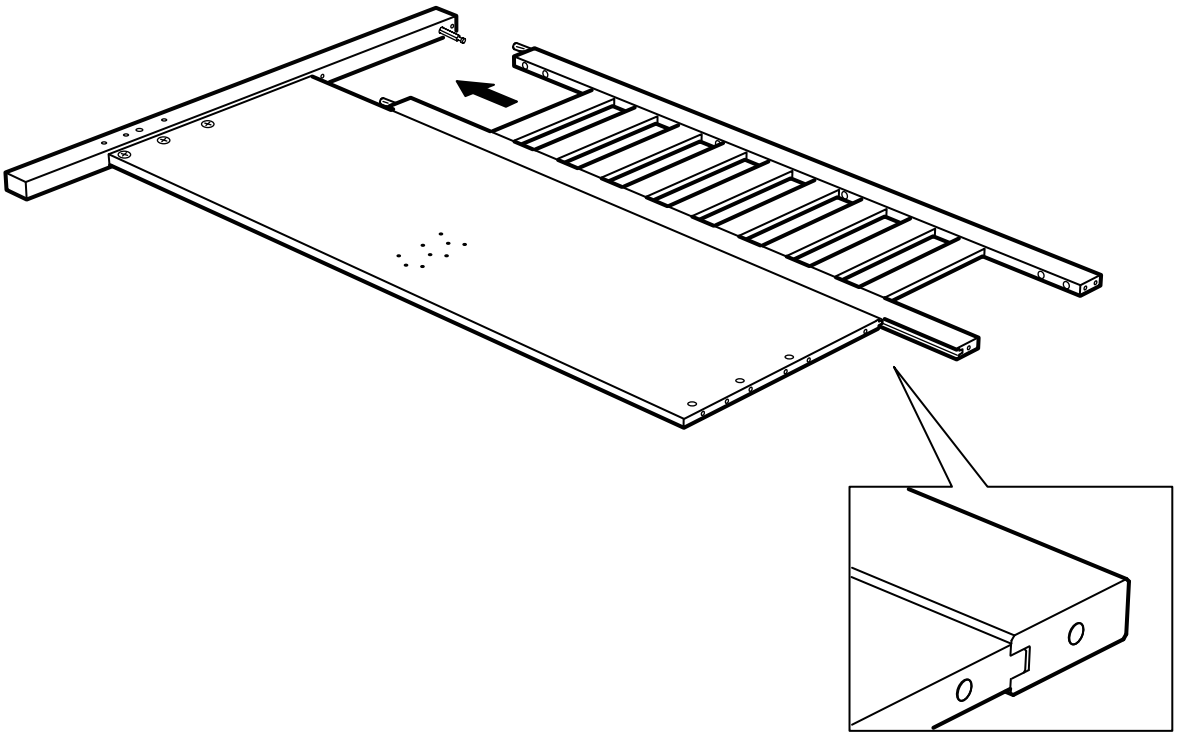

6

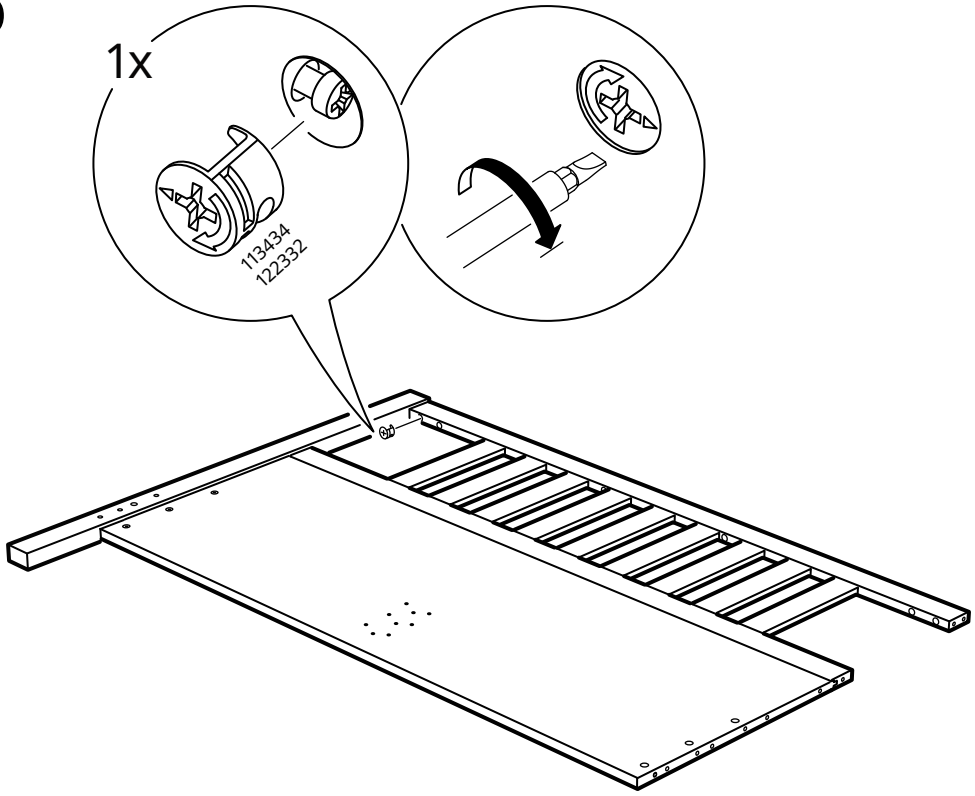

7

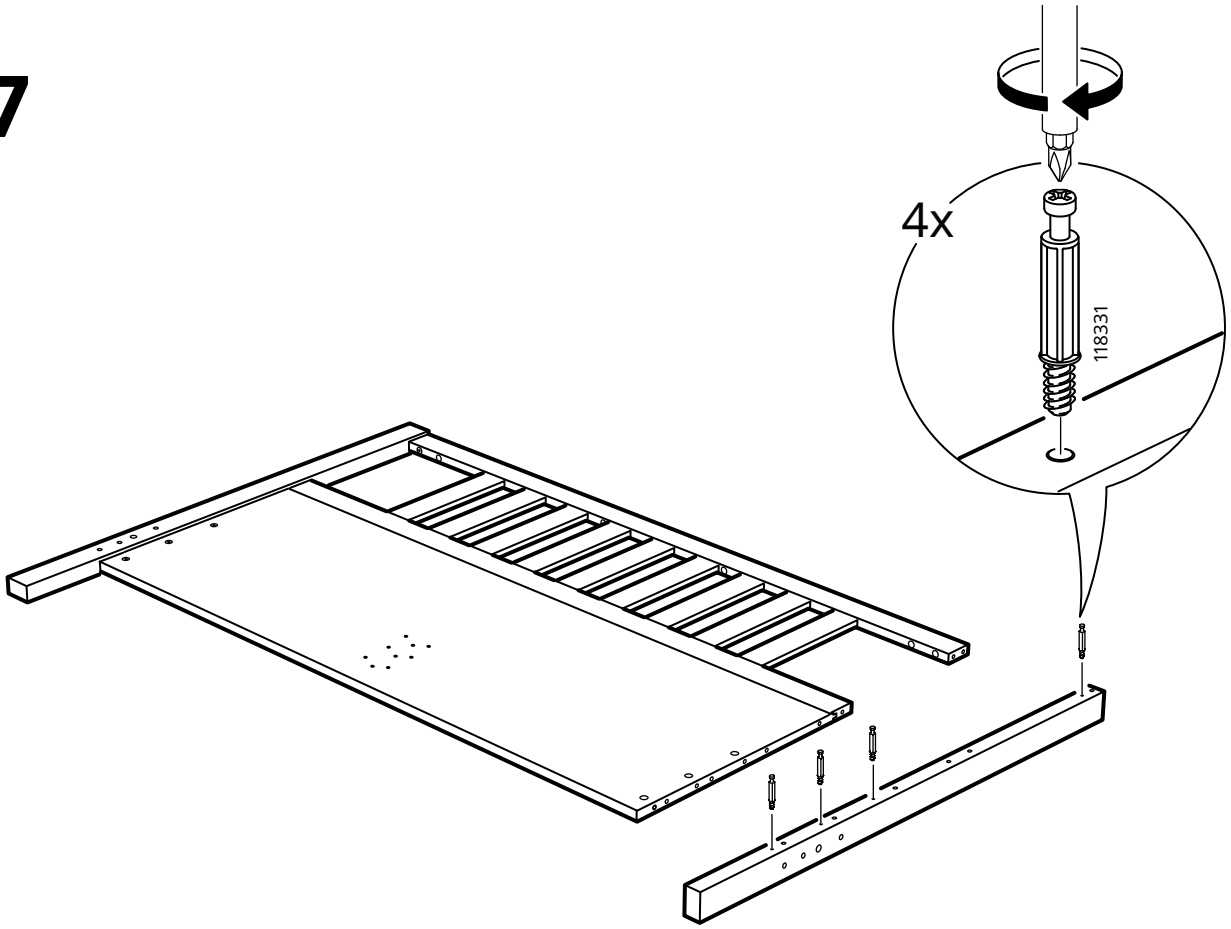

8

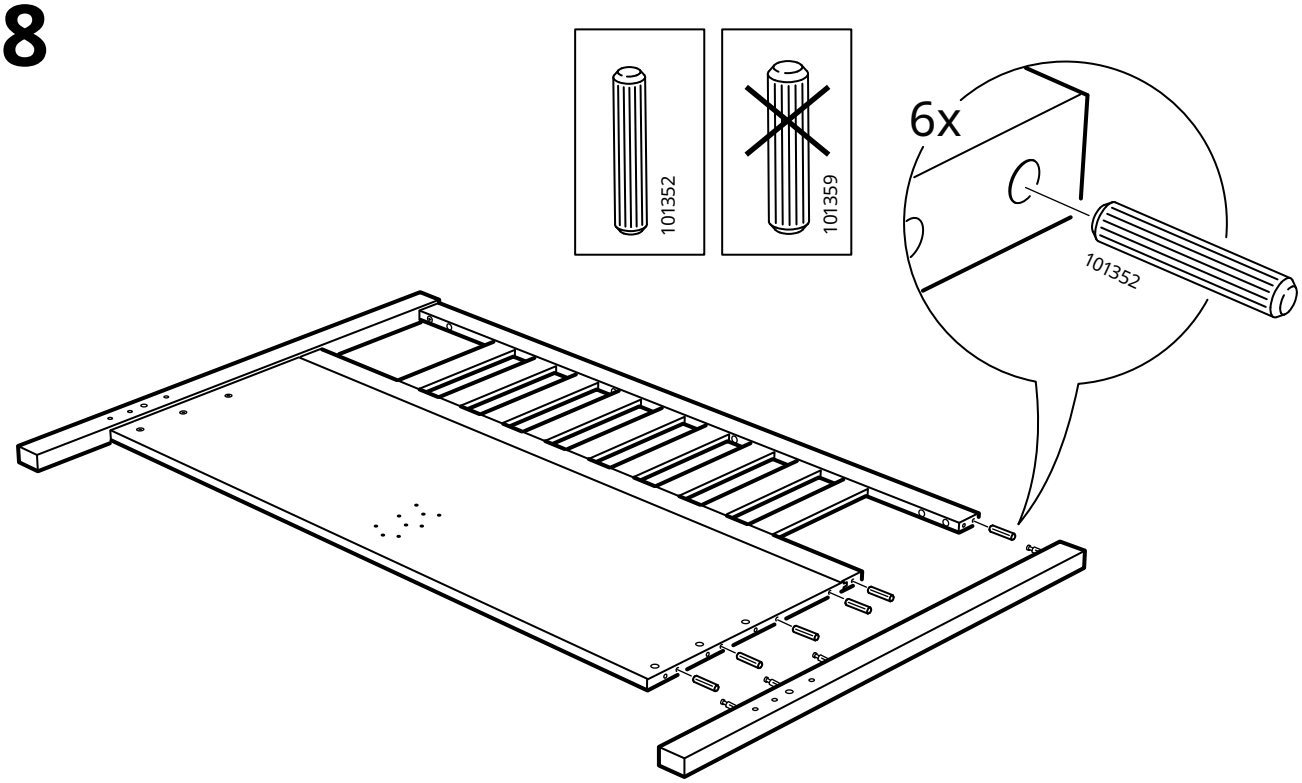

9

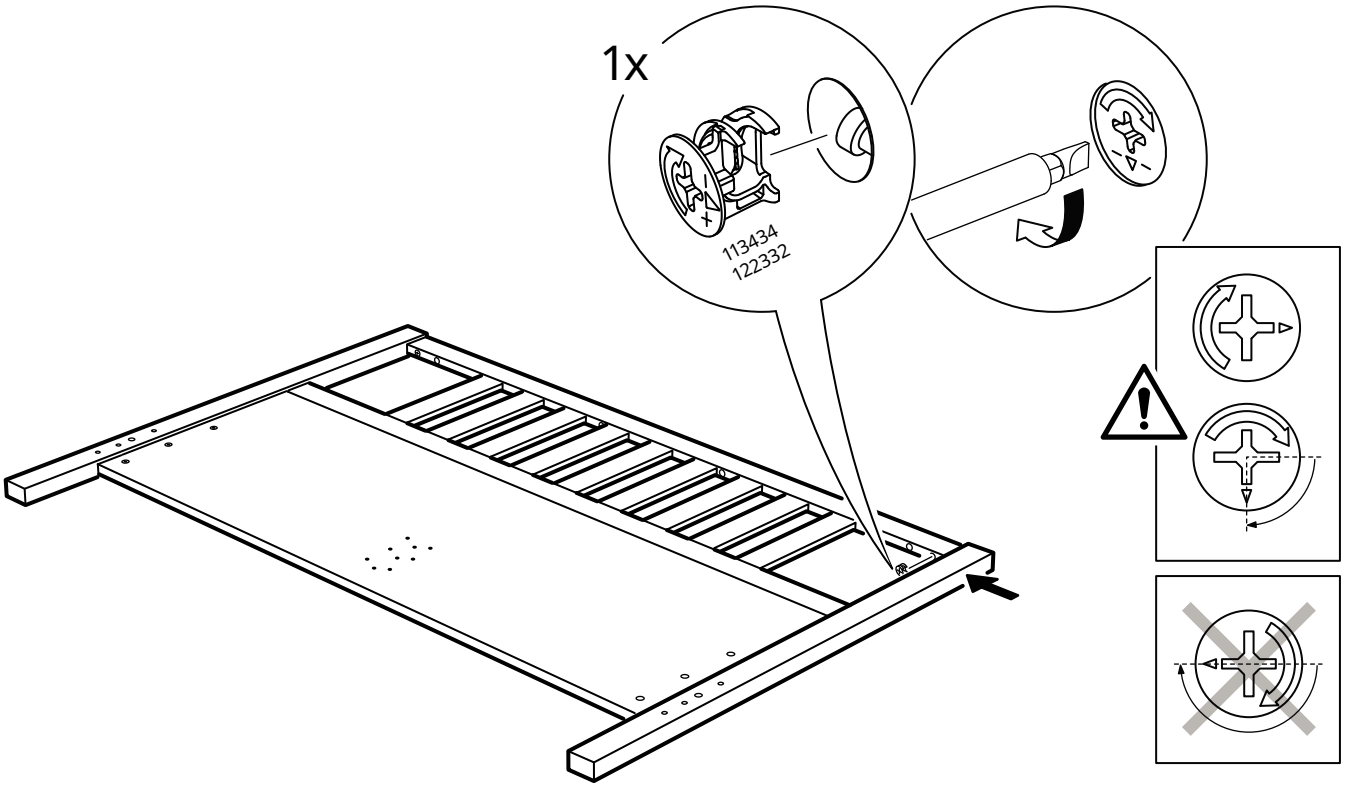

10

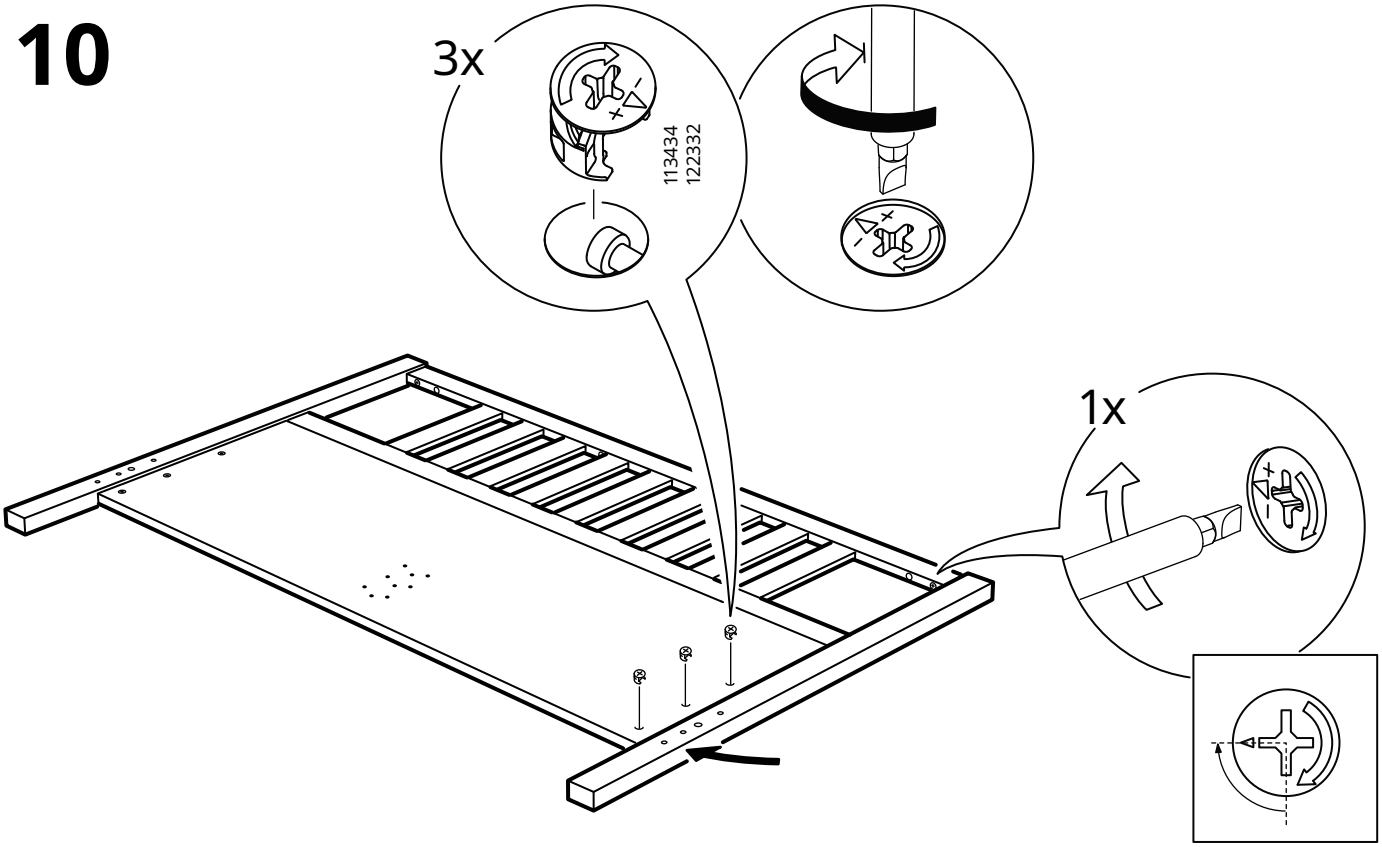

11

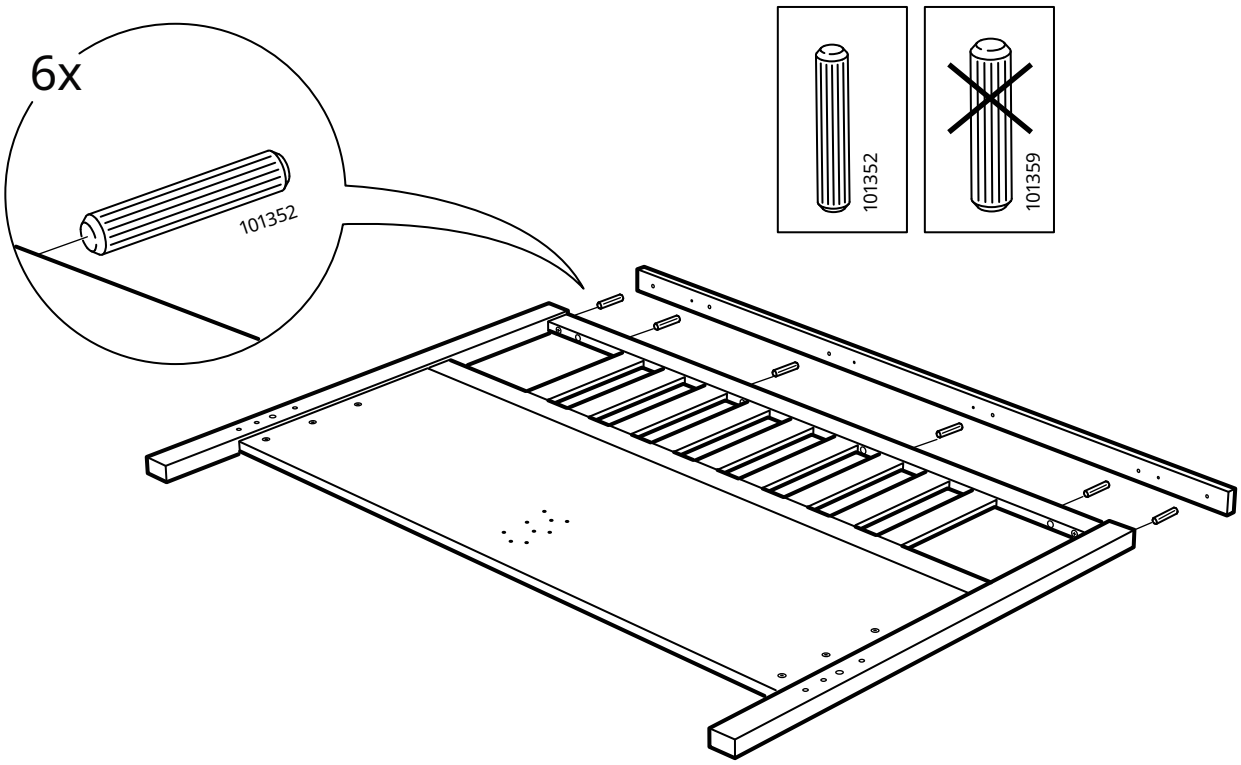

12

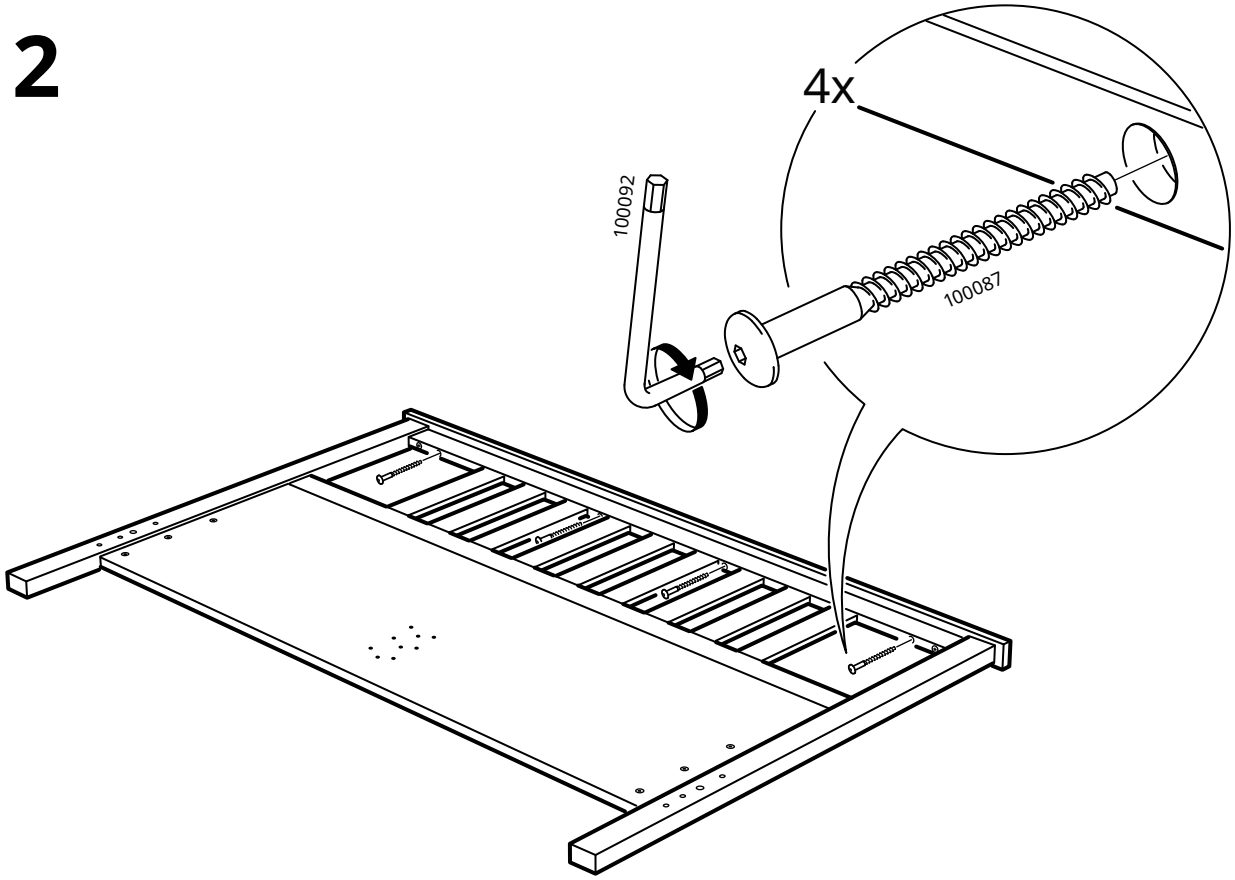

13

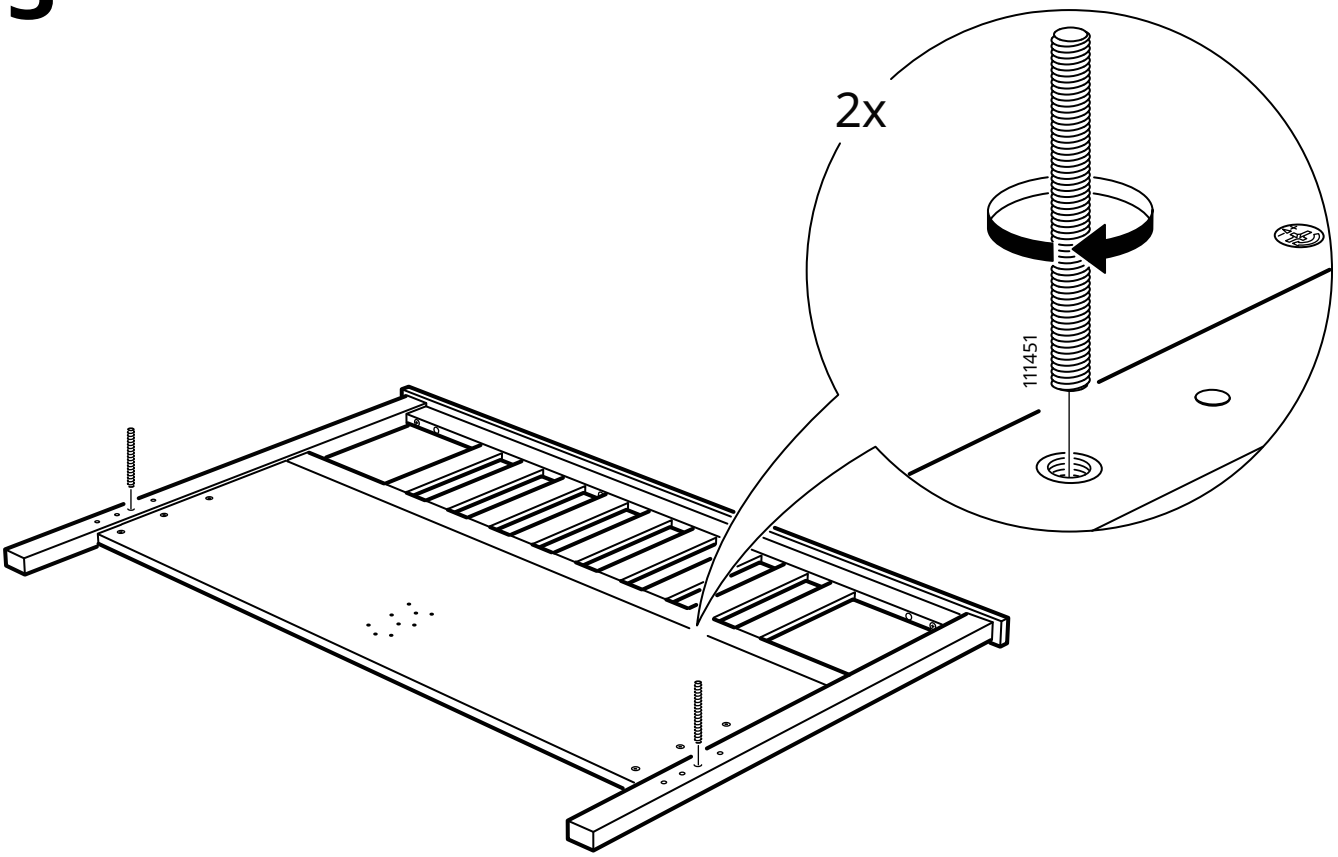

14

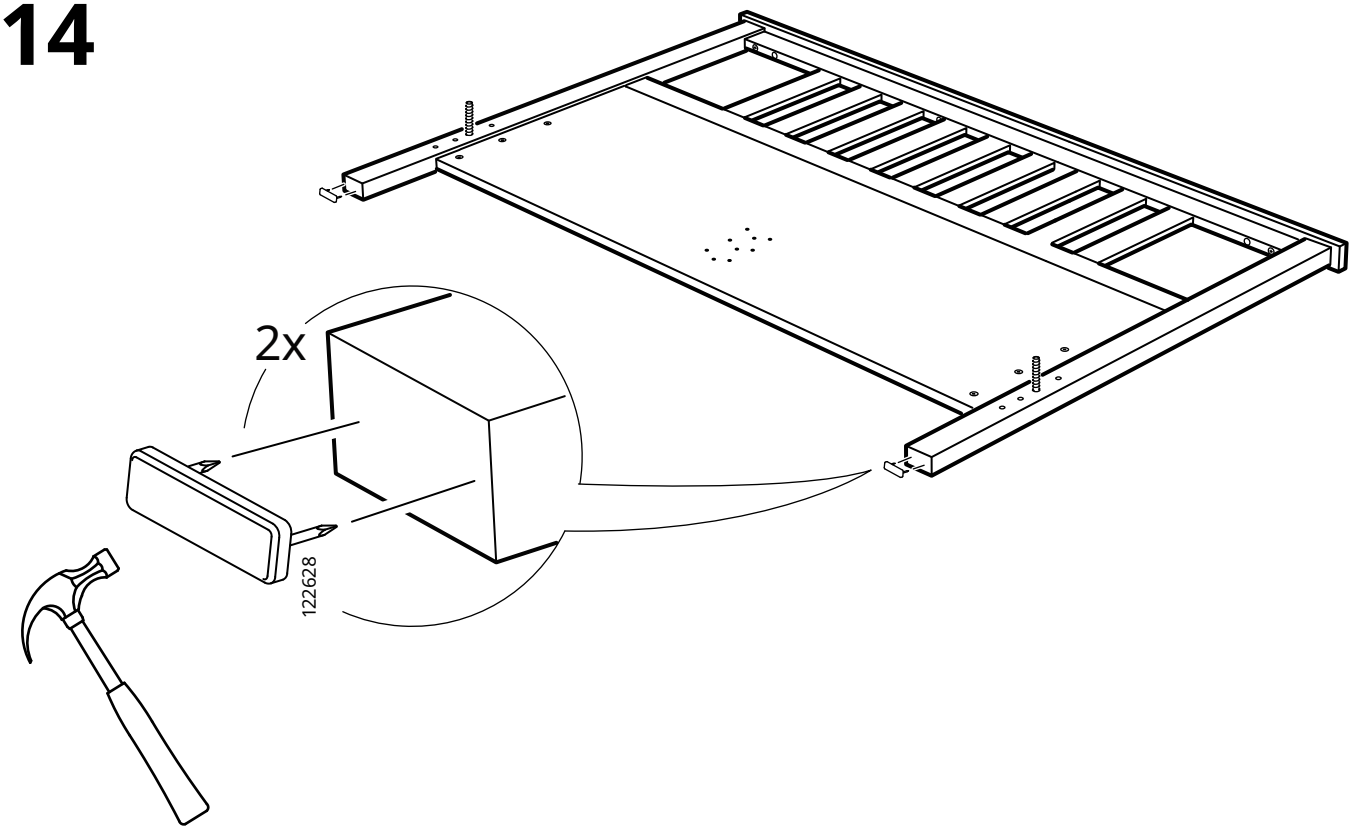

15

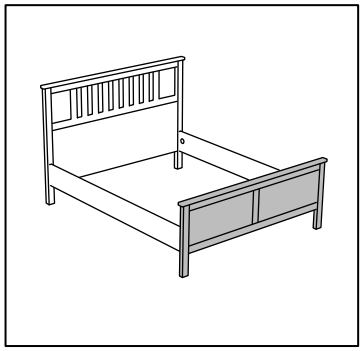

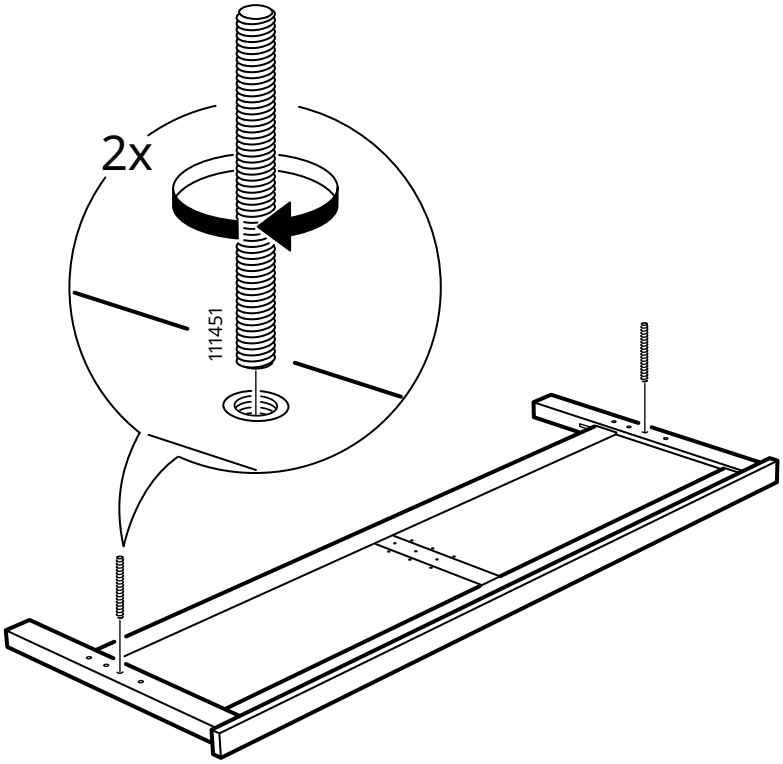

16

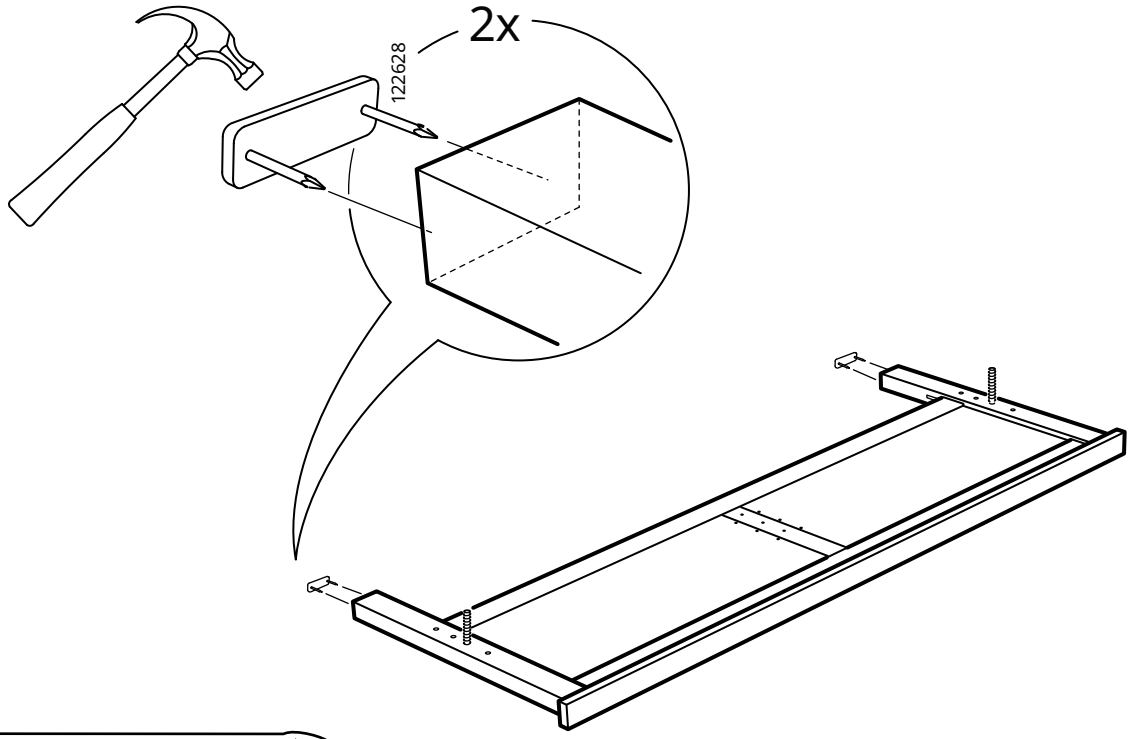

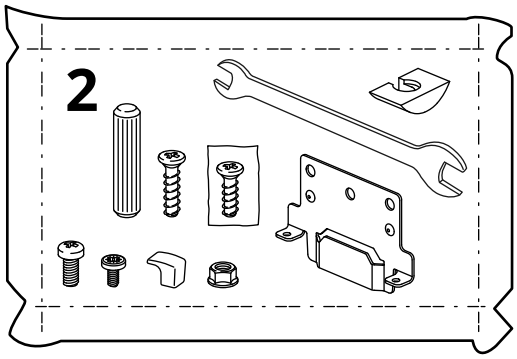

17

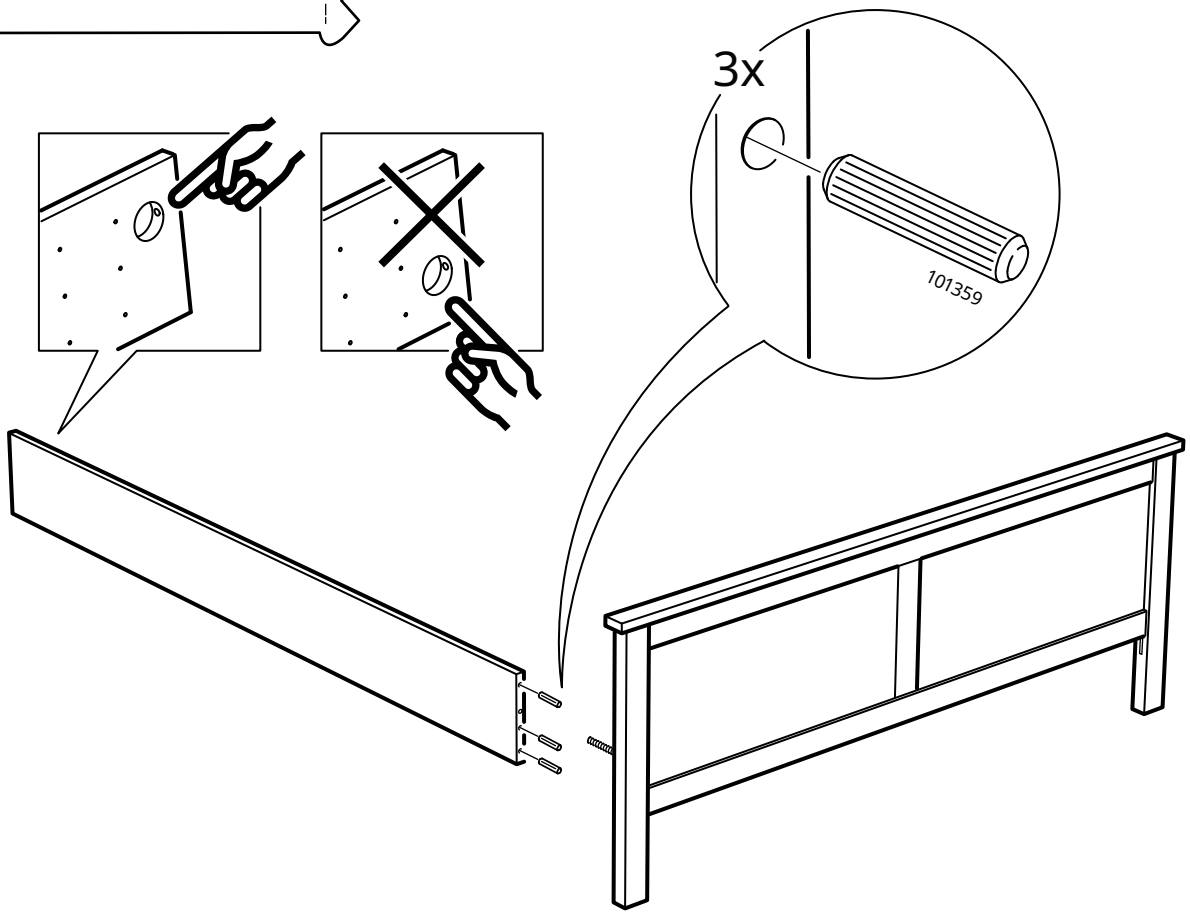

18

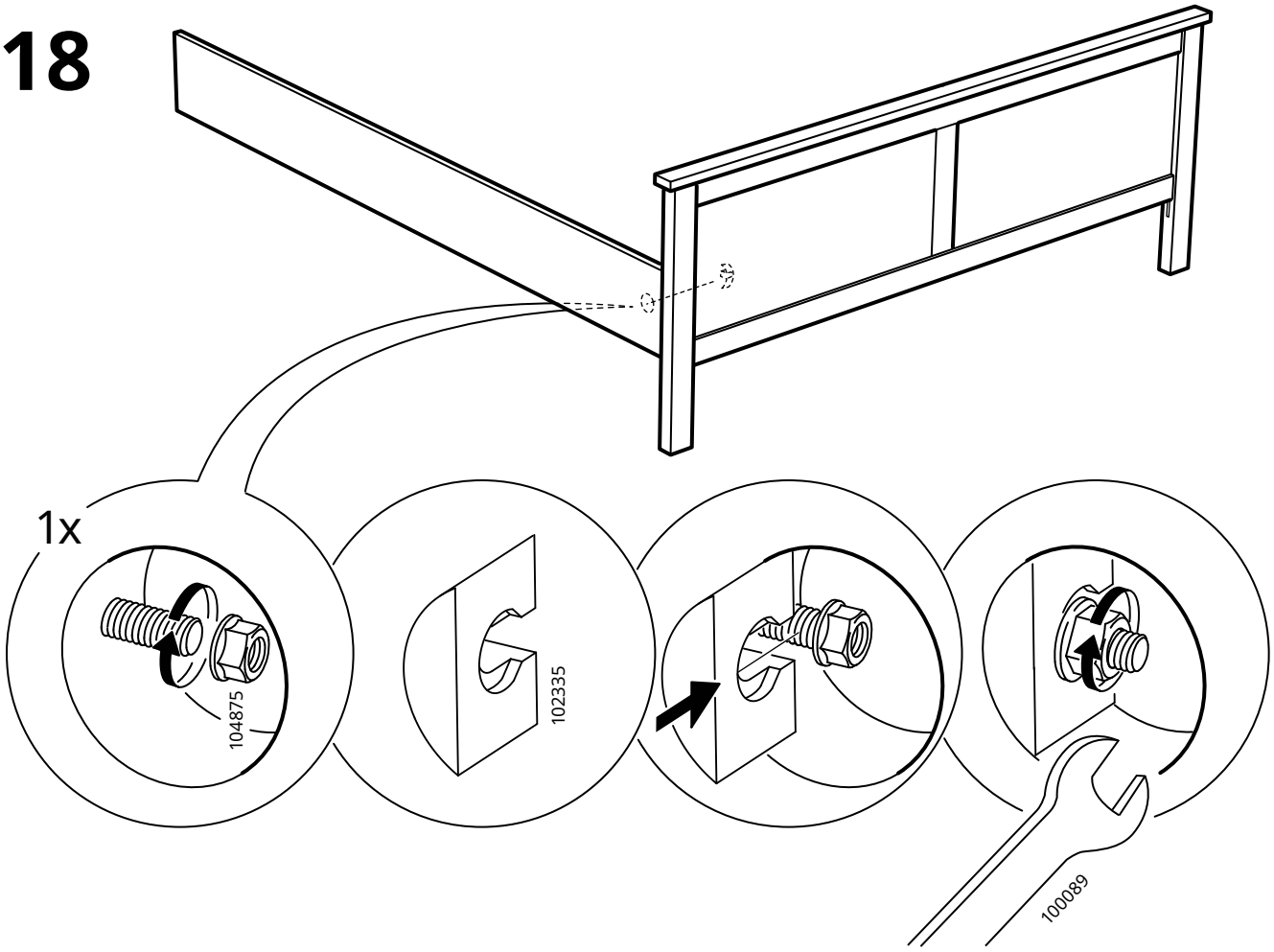

19

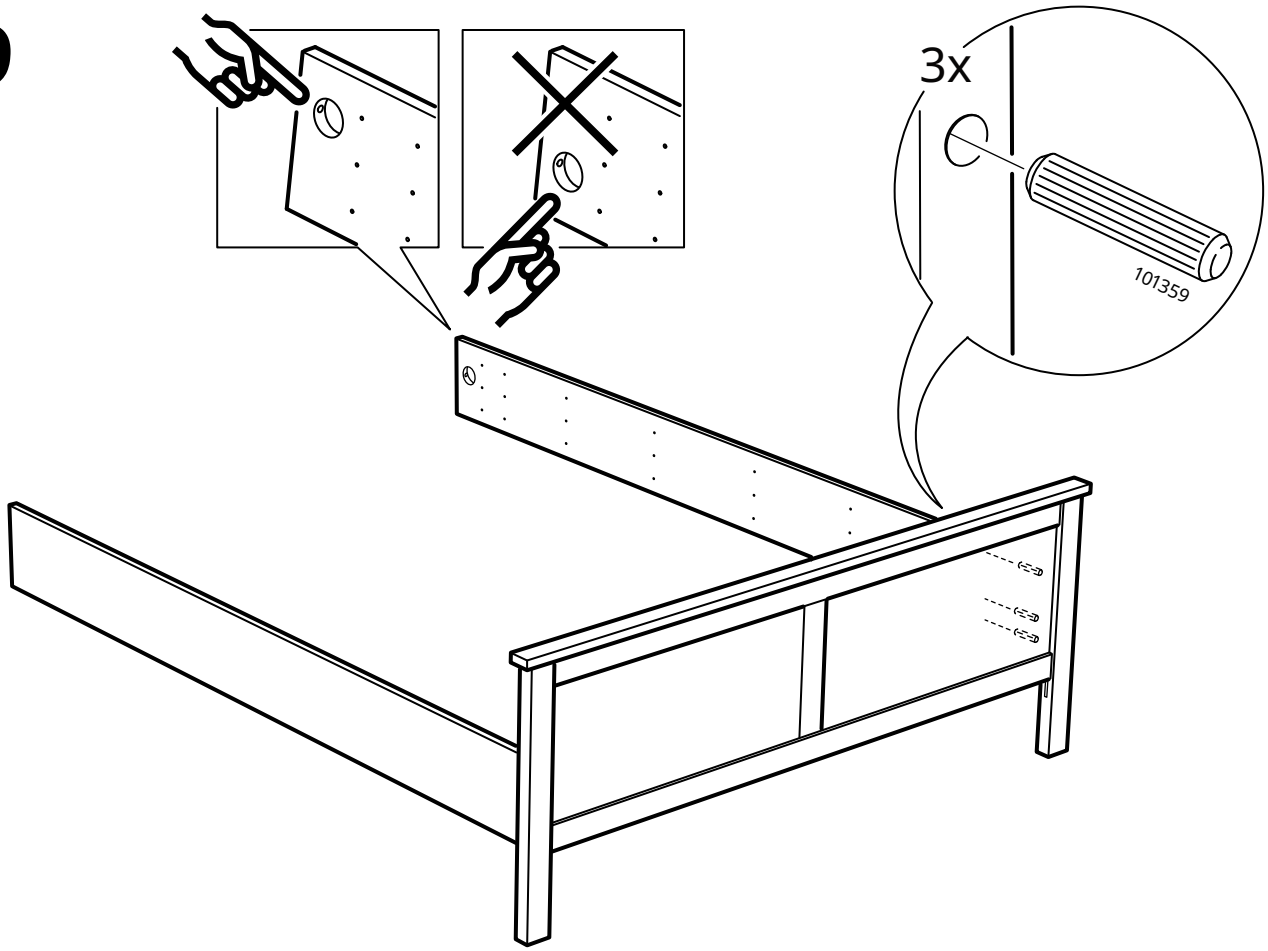

20

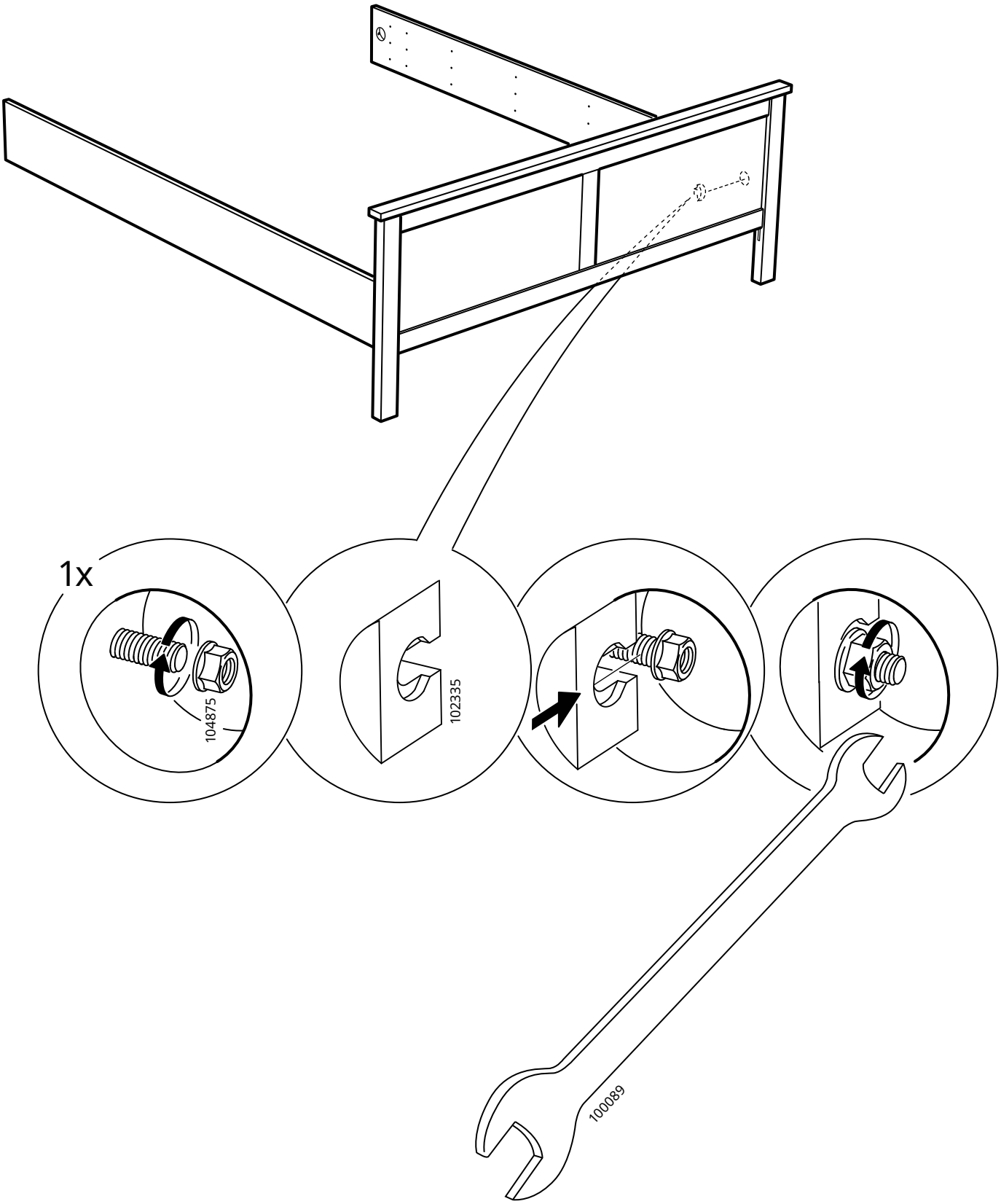

21

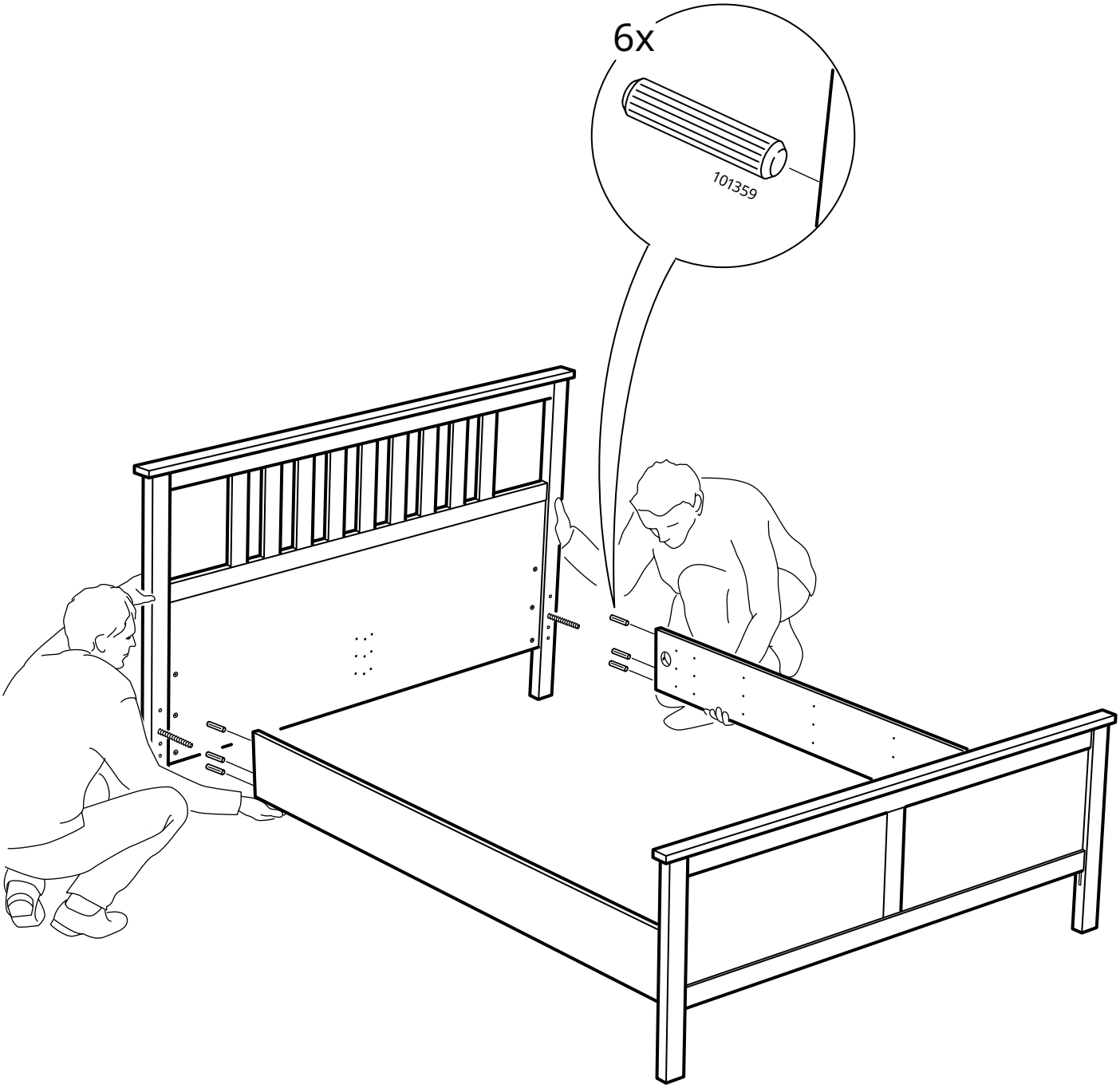

22

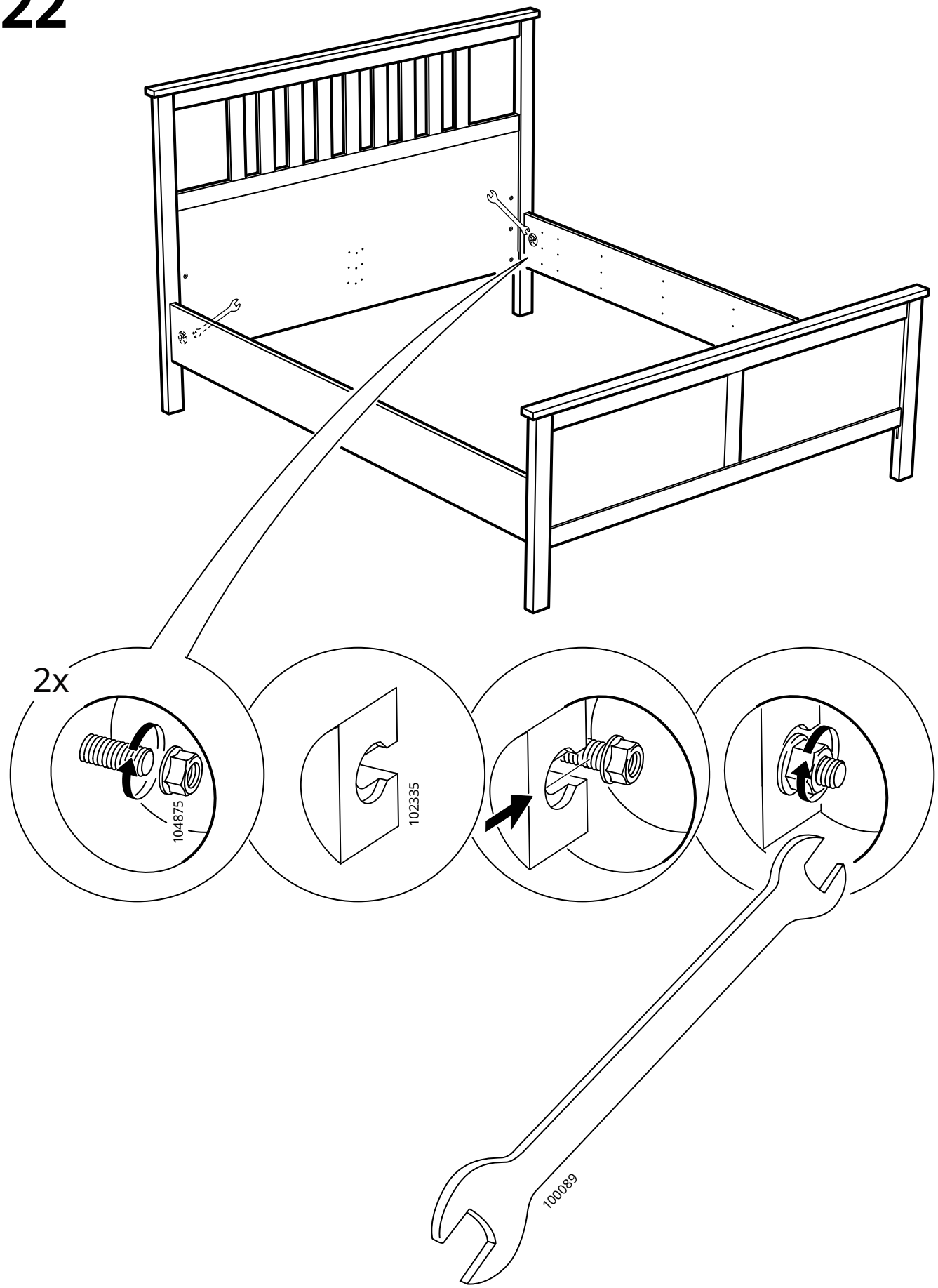

23

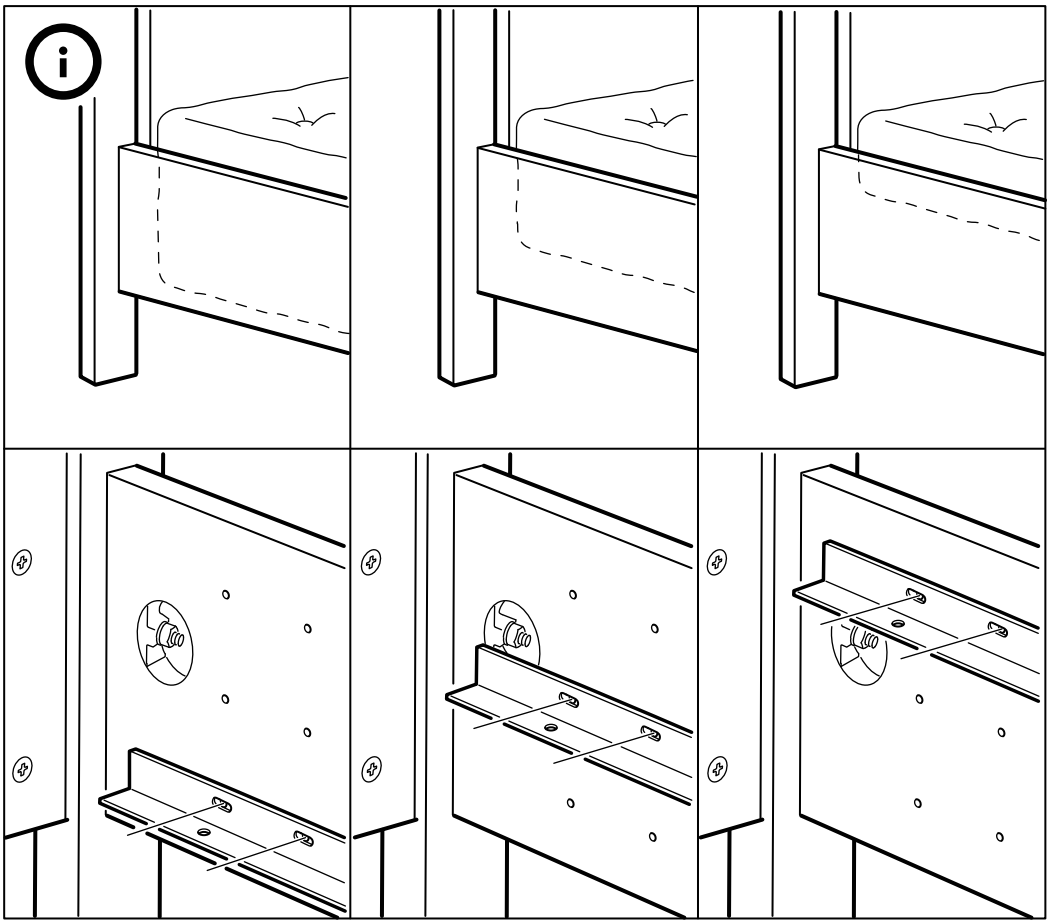

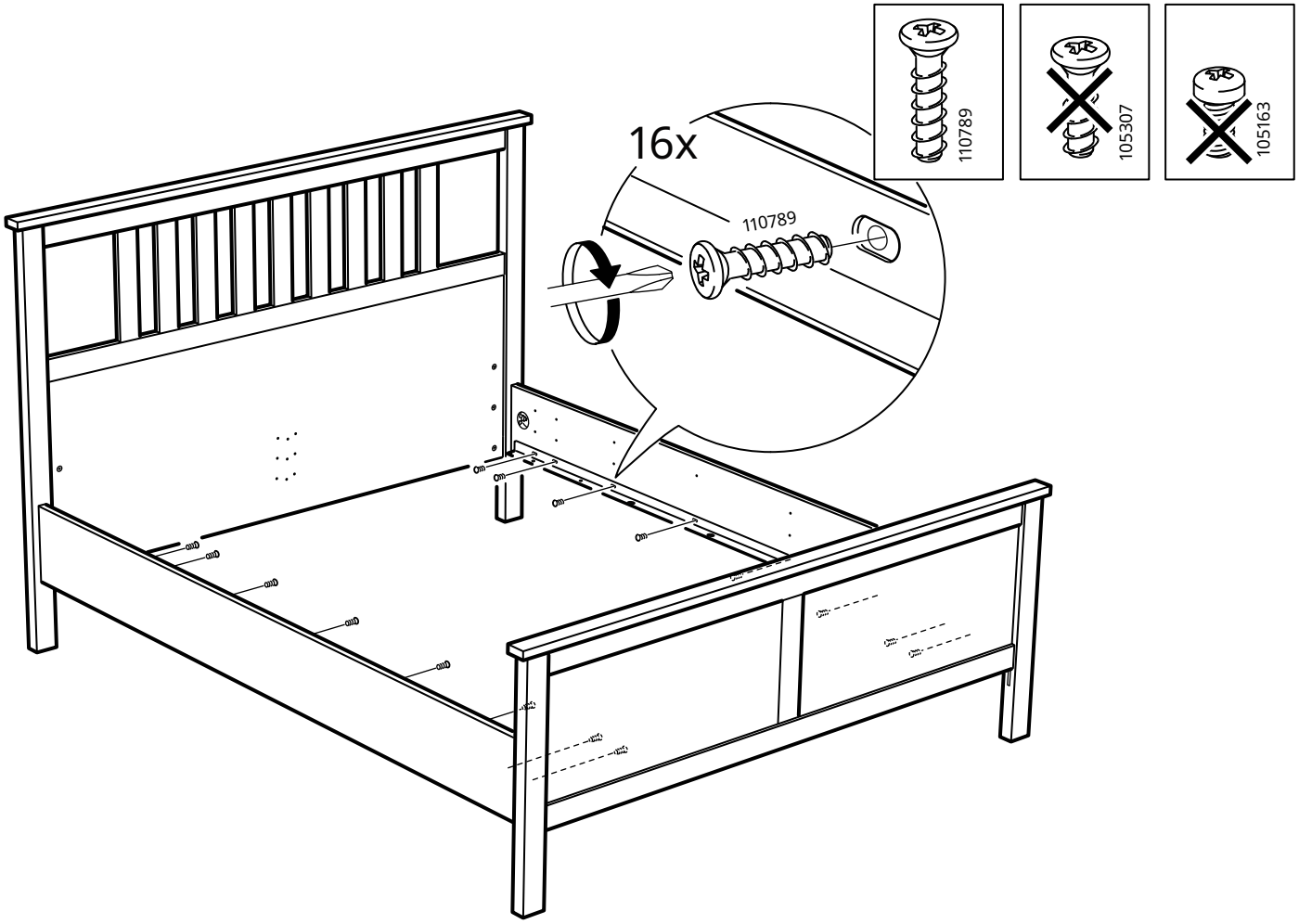

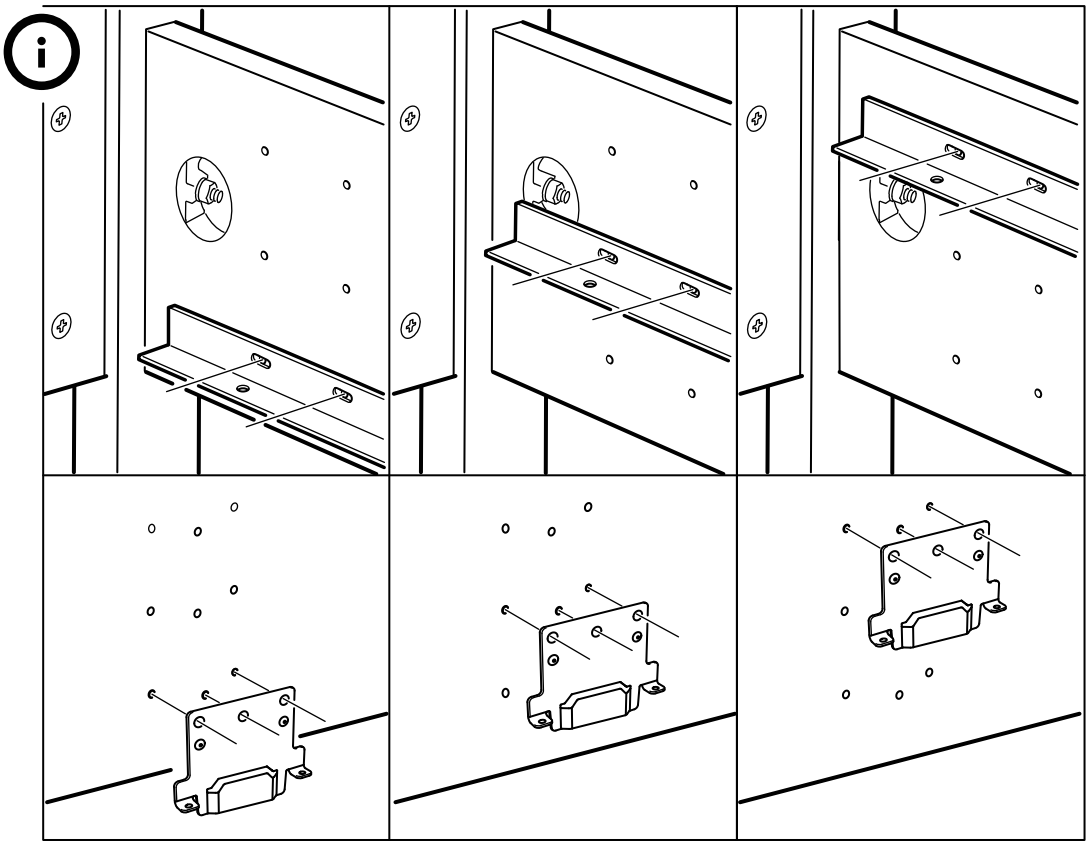

24

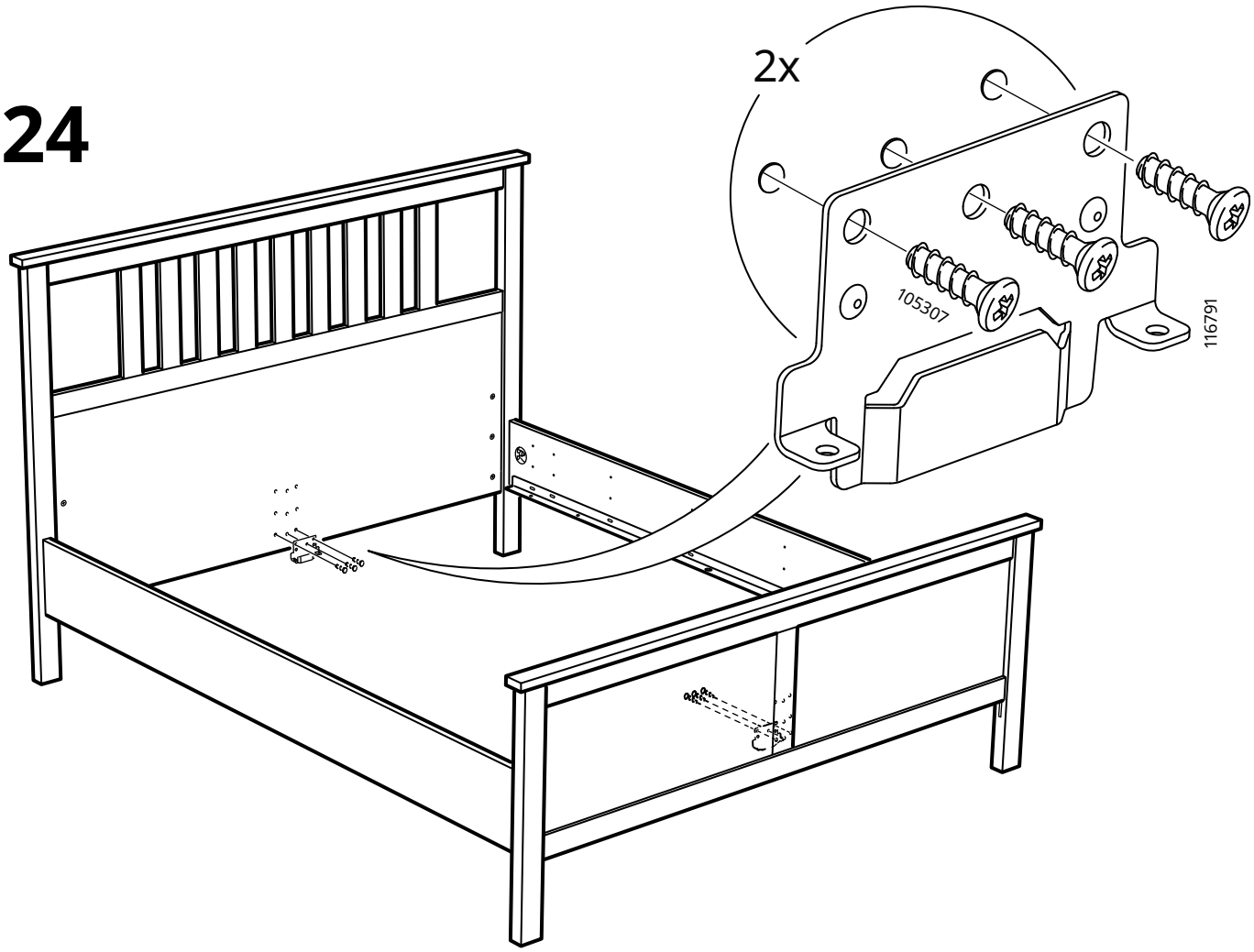

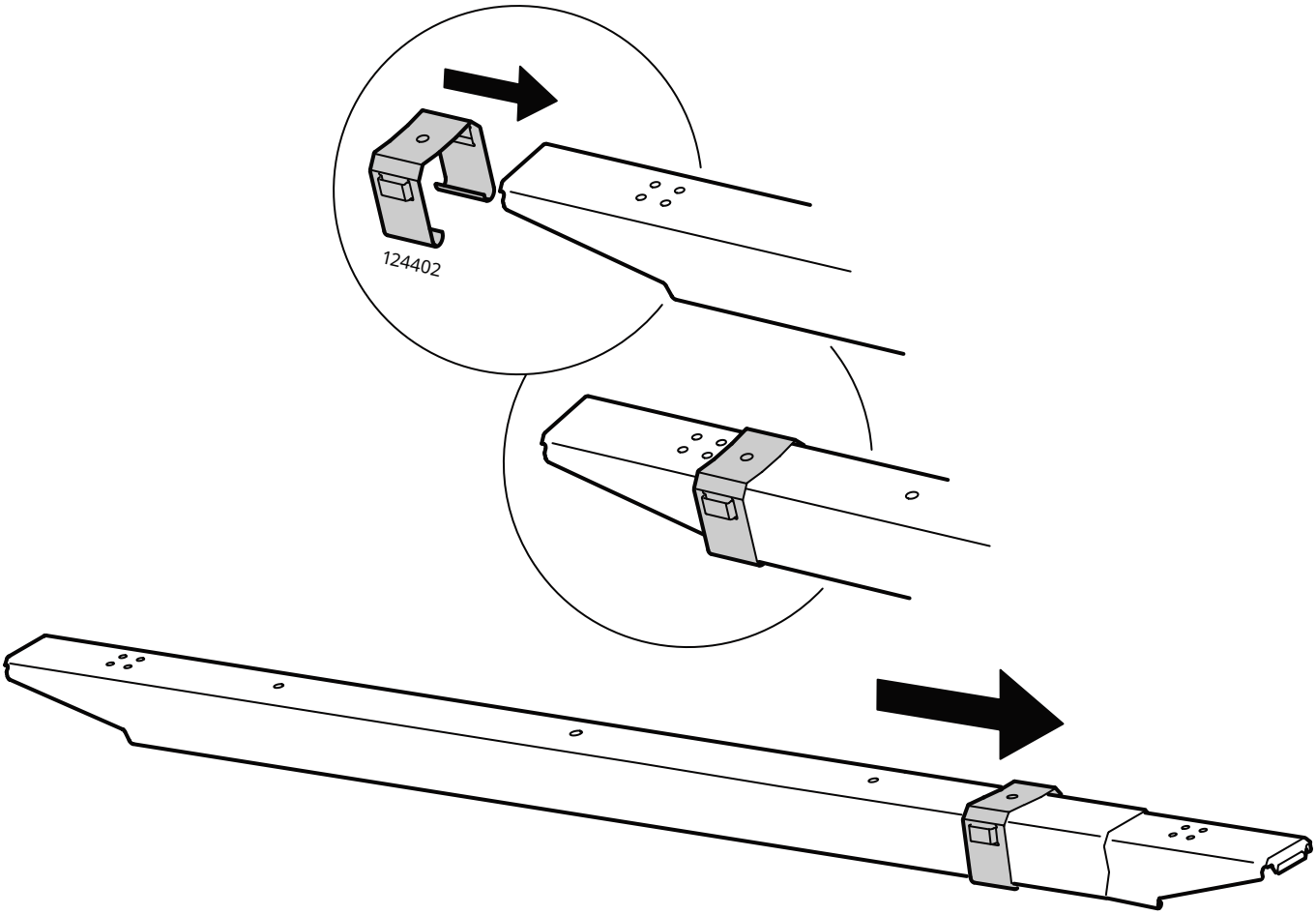

25

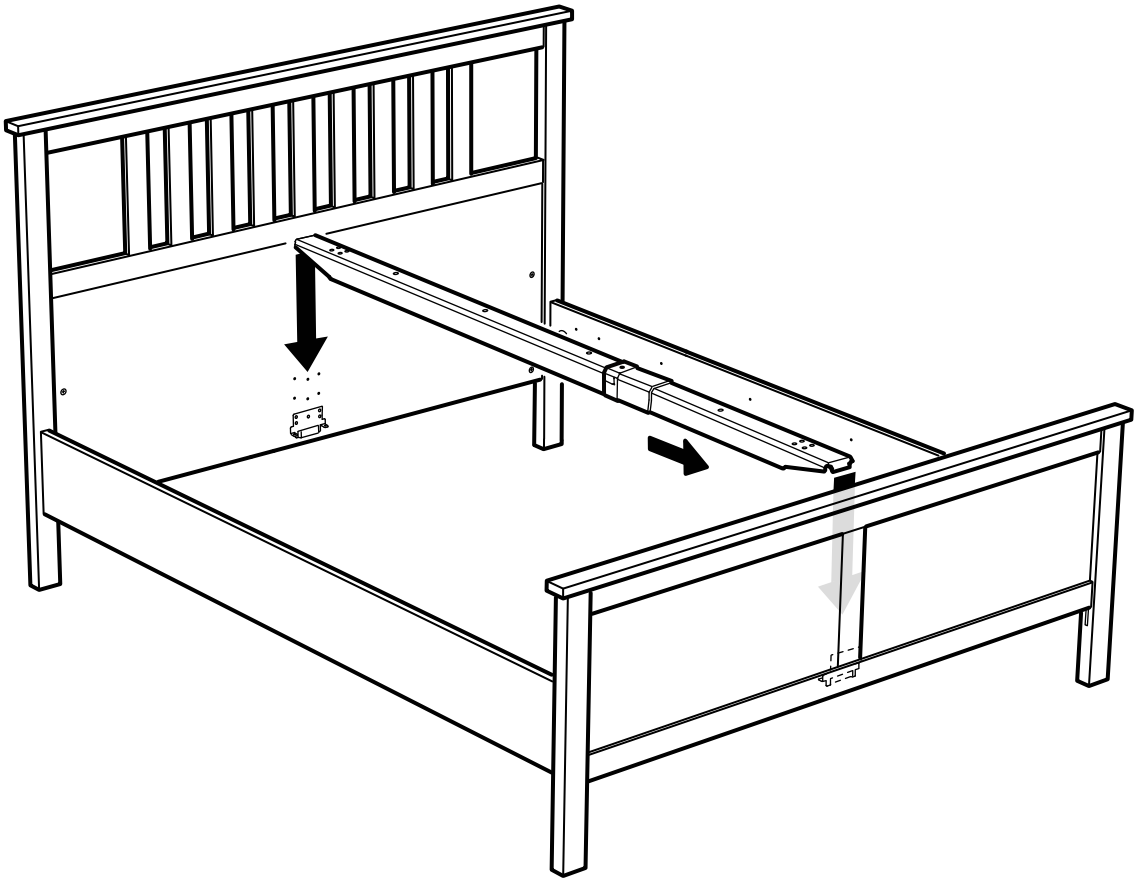

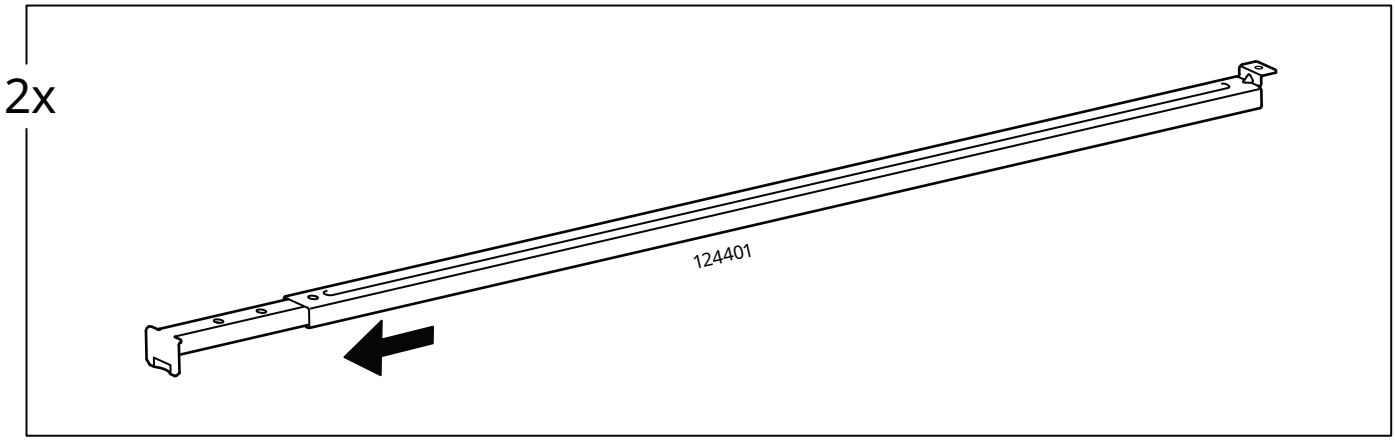

26

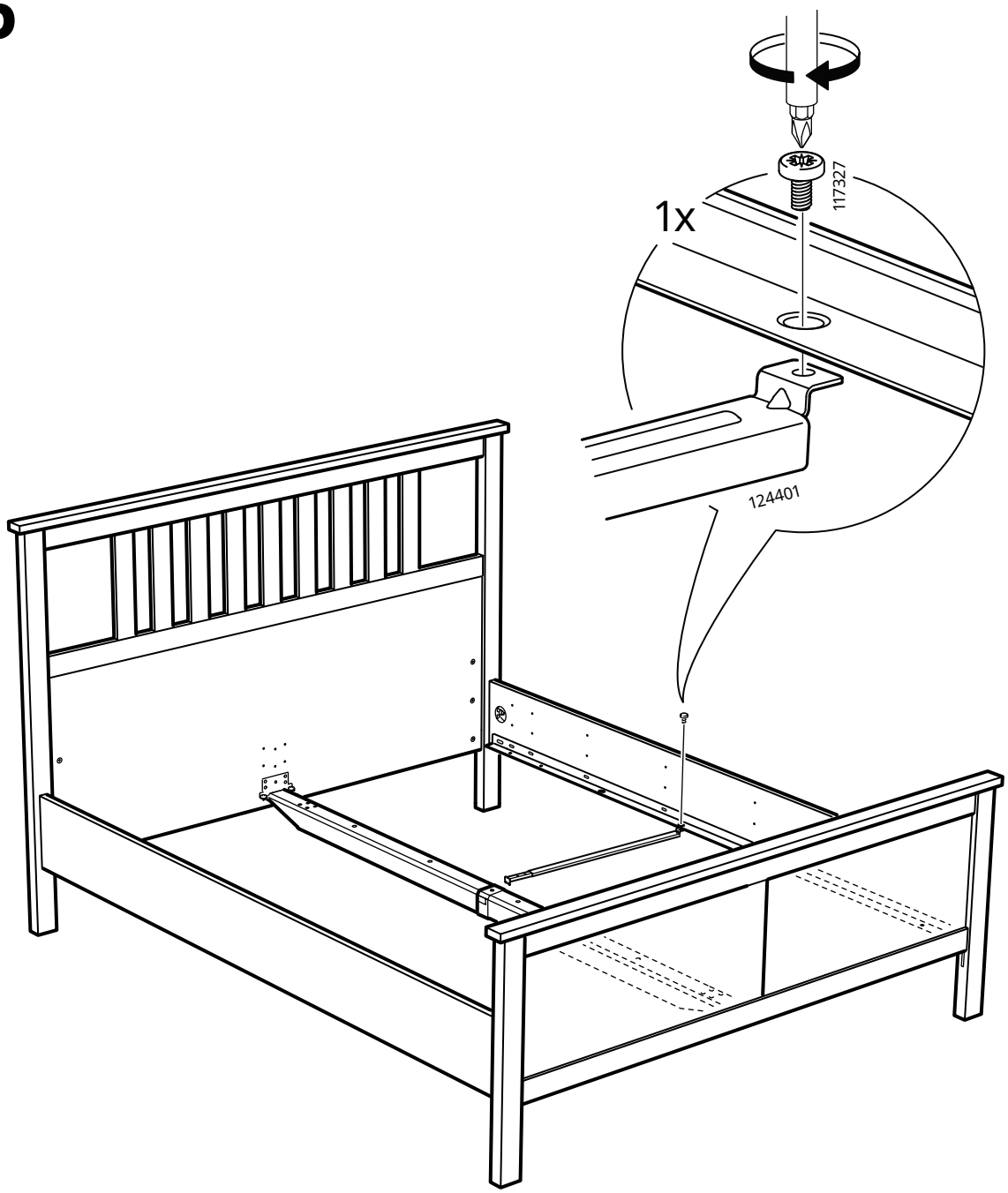

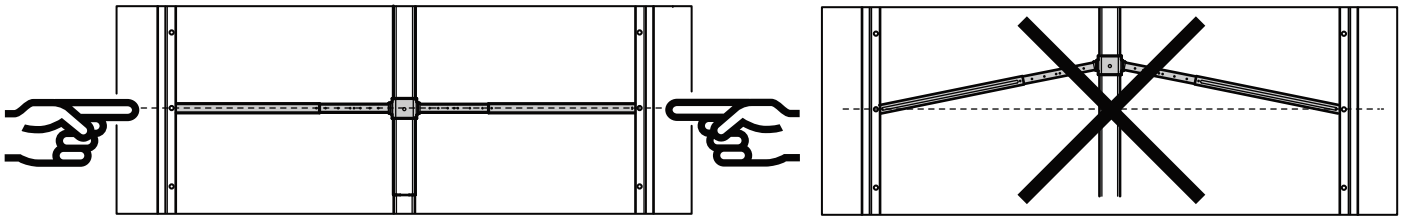

27

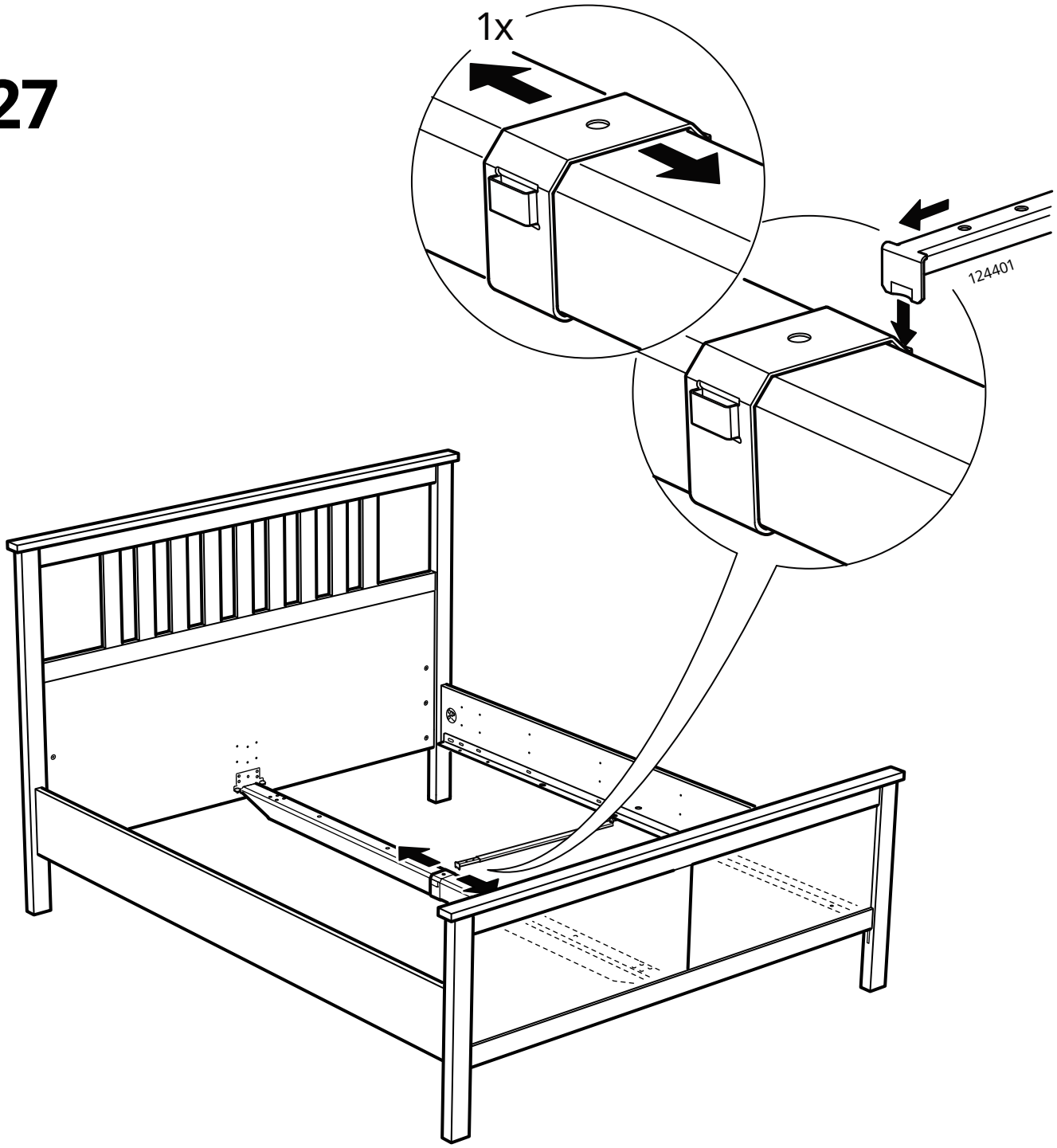

28

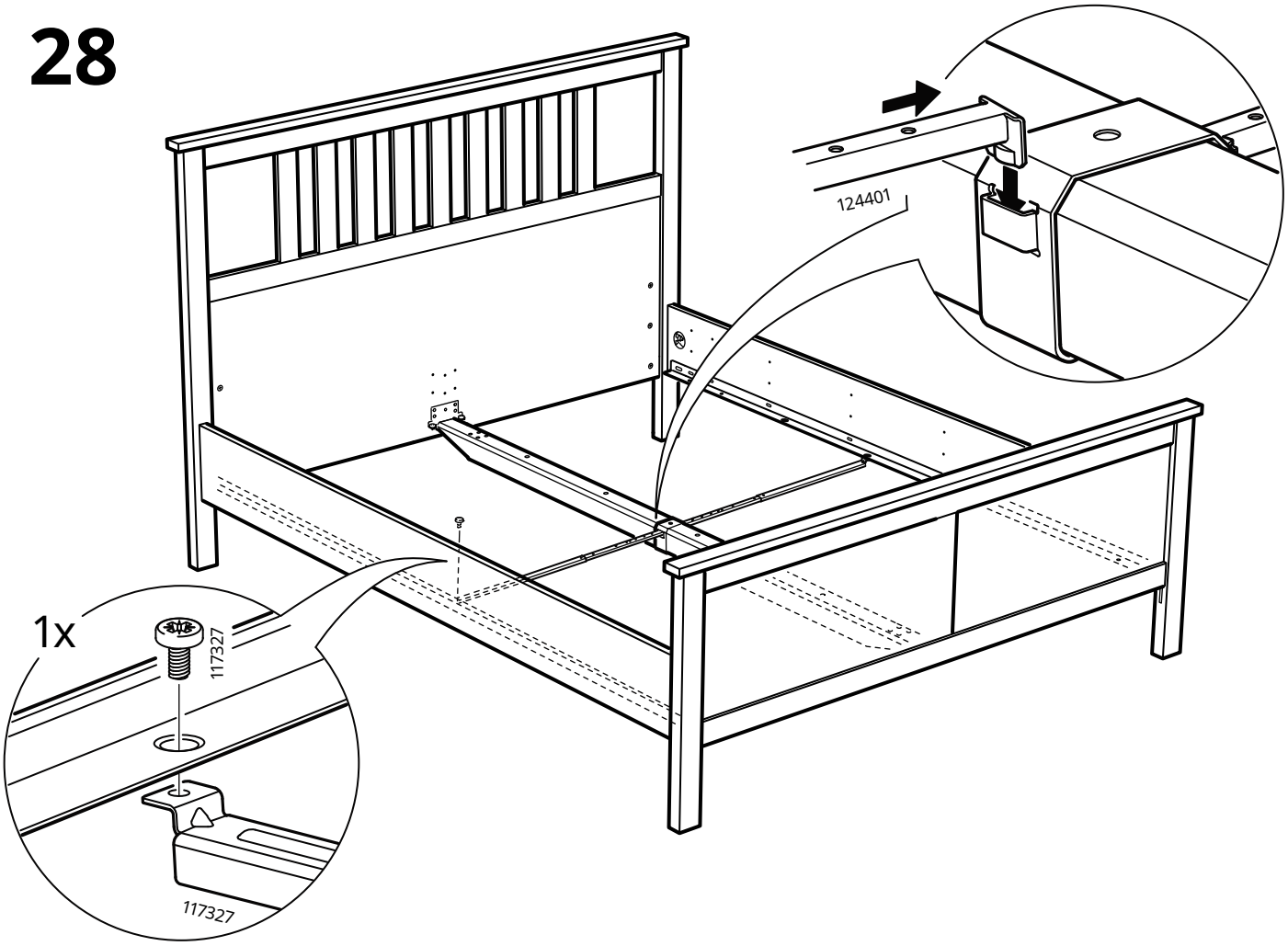

29

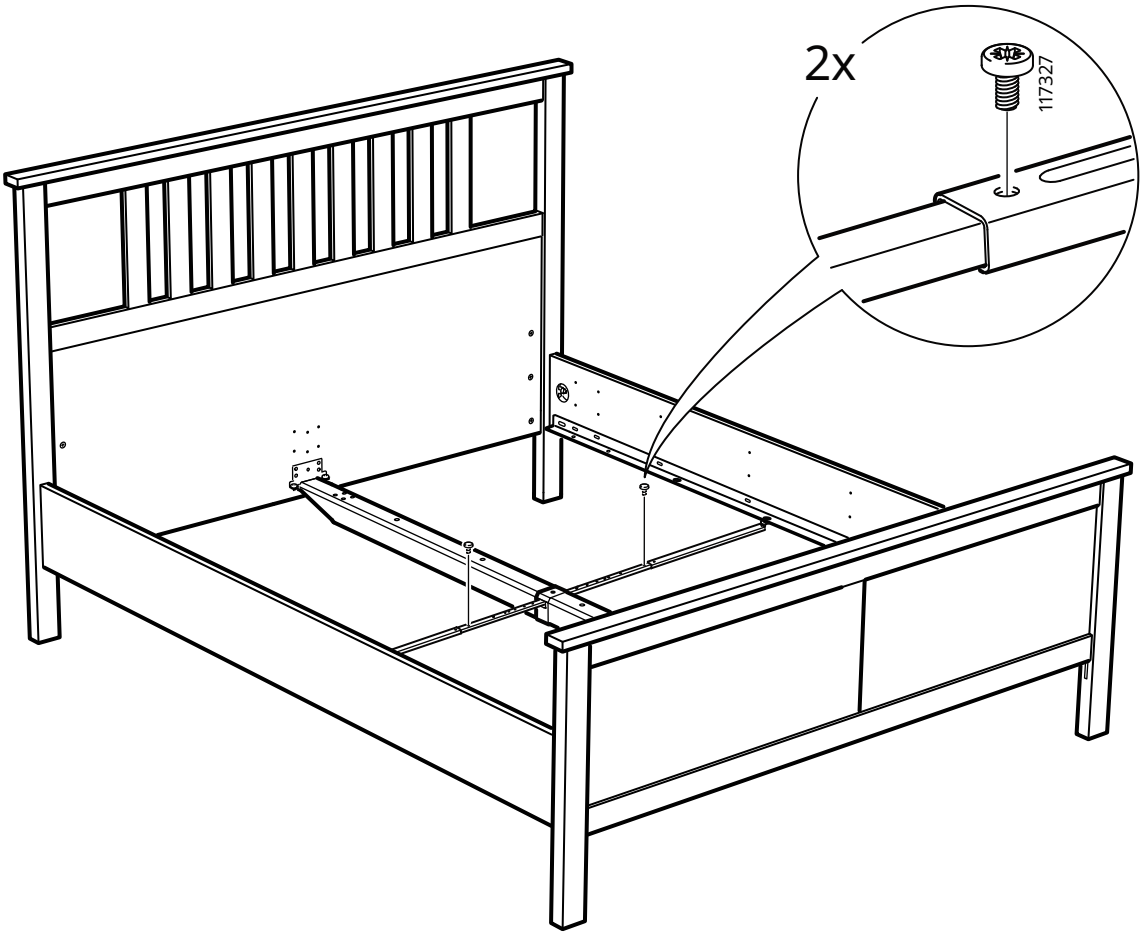

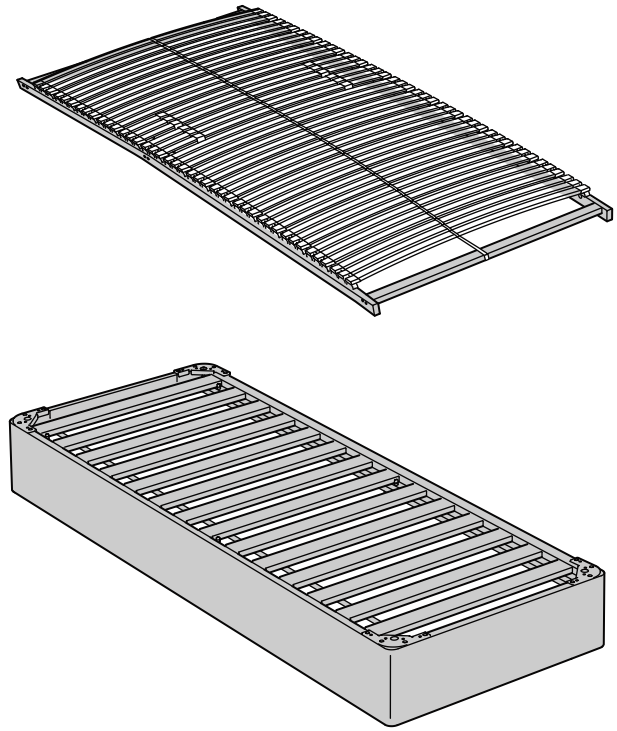

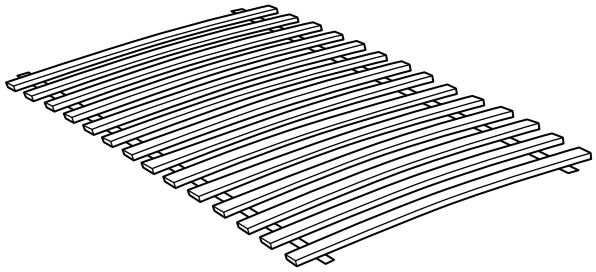

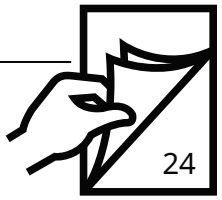

30

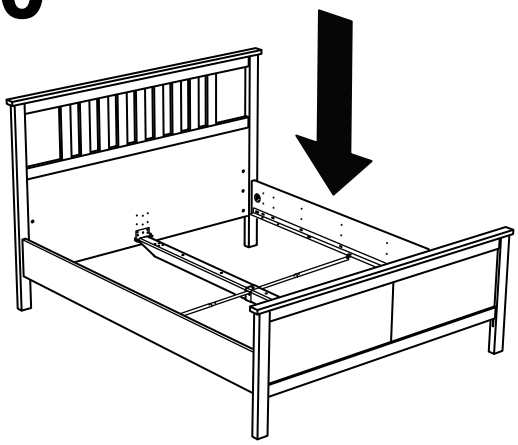

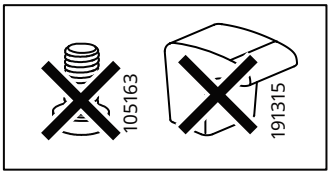

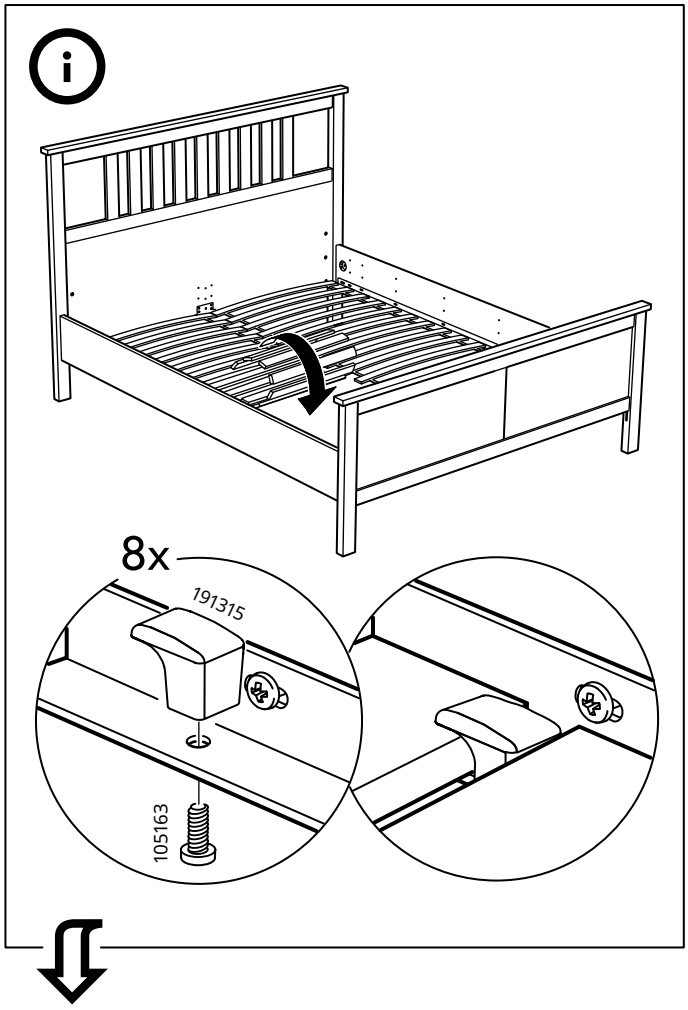

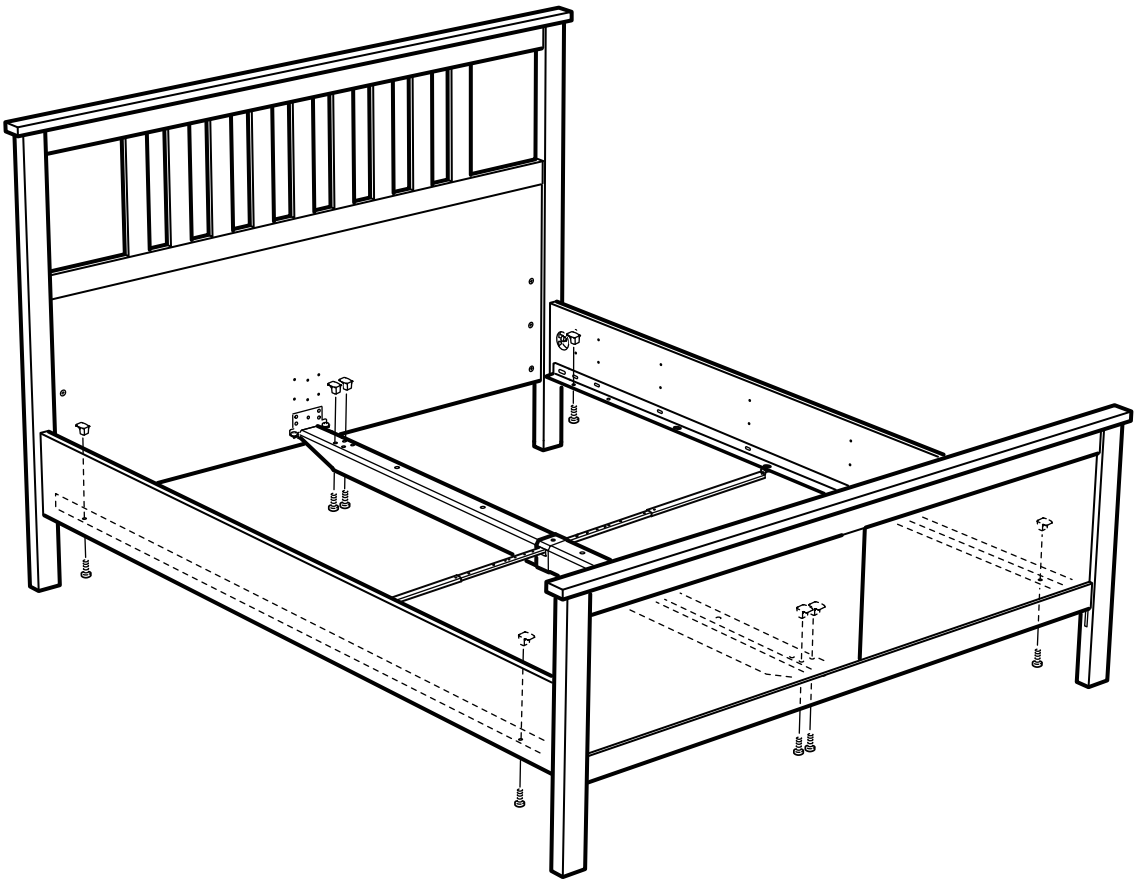

© Inter IKEA Systems B.V. 2016
2022-08-24 AA-1892549-2