INGMARSÖ

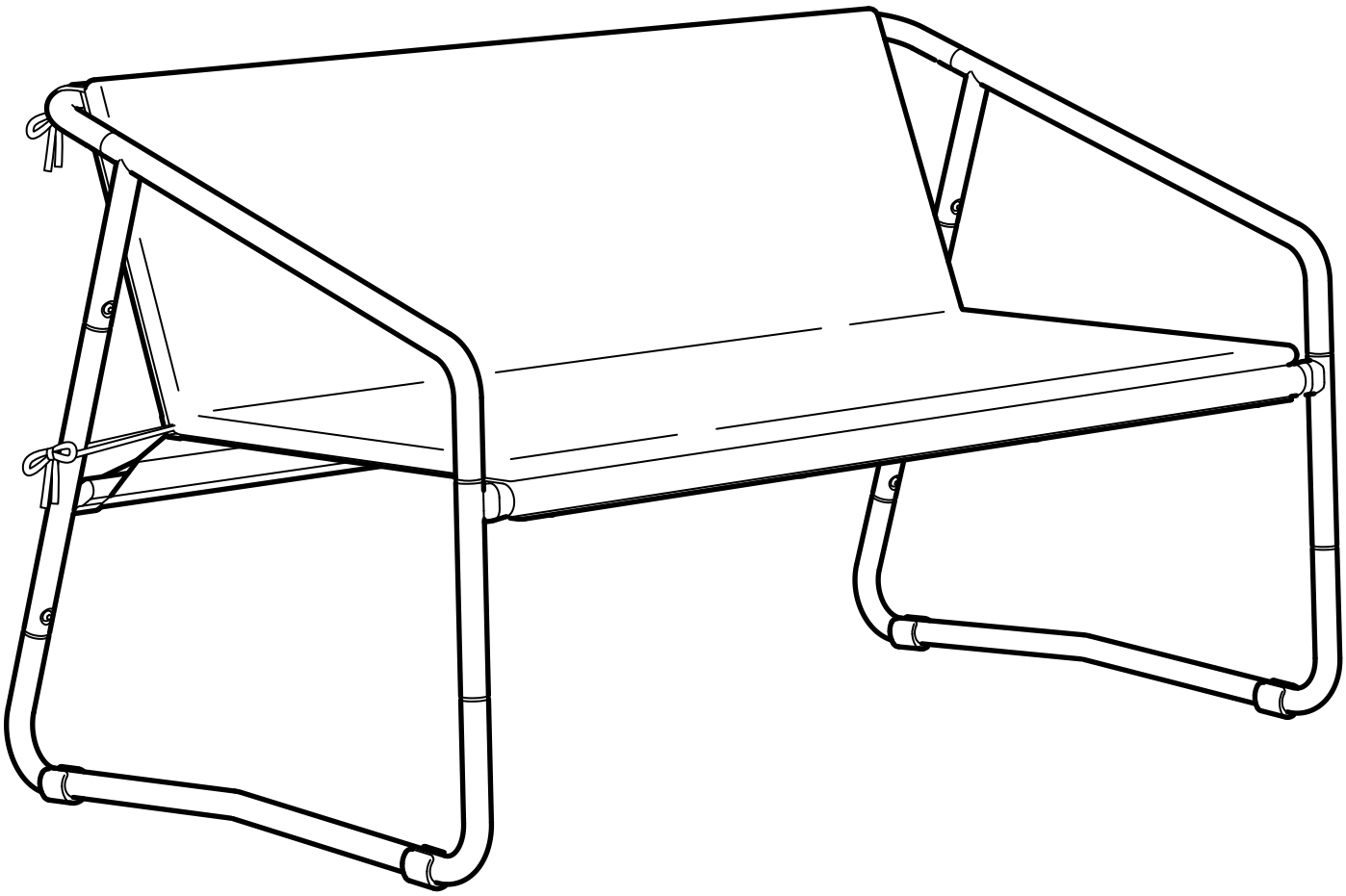

Design and Quality
IKEA of Sweden

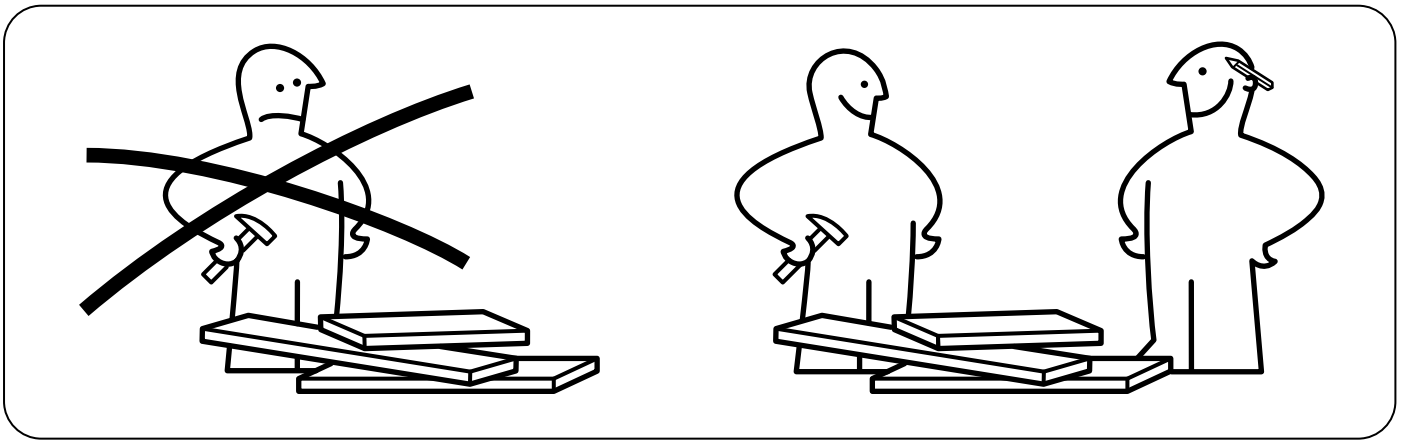

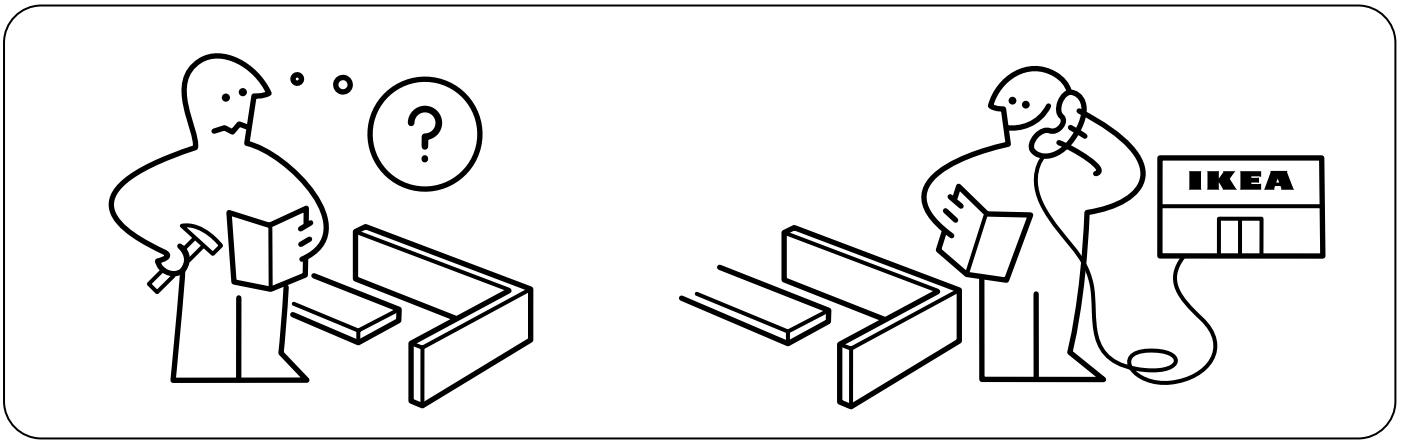

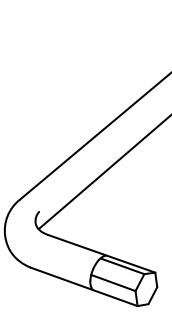

1x

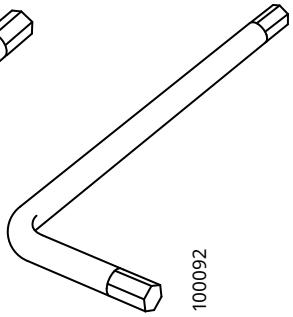

1x

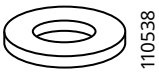

2x

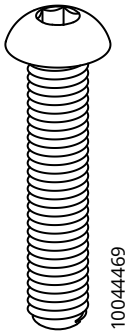

2x

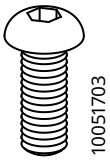

10x

1

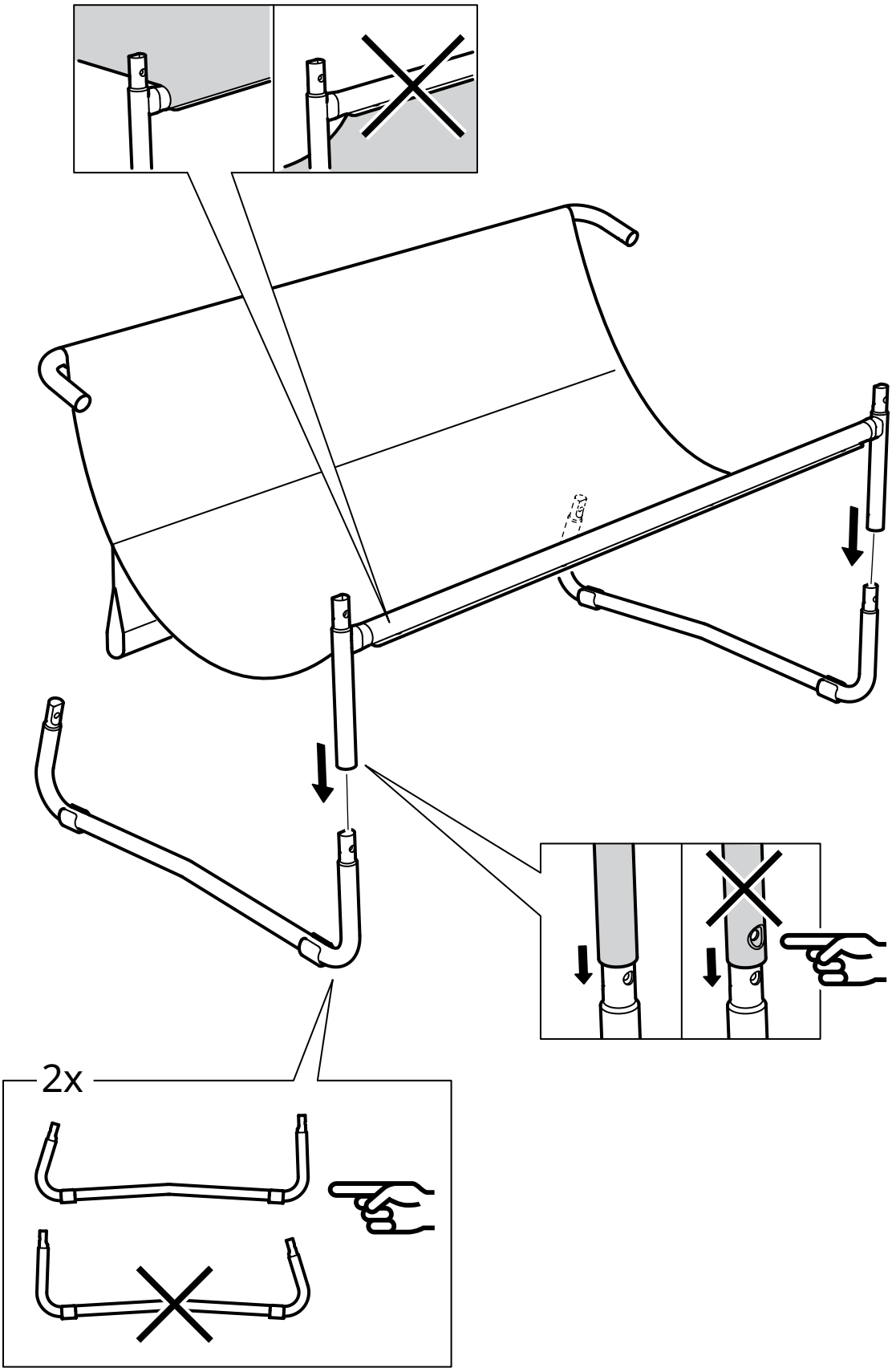

2

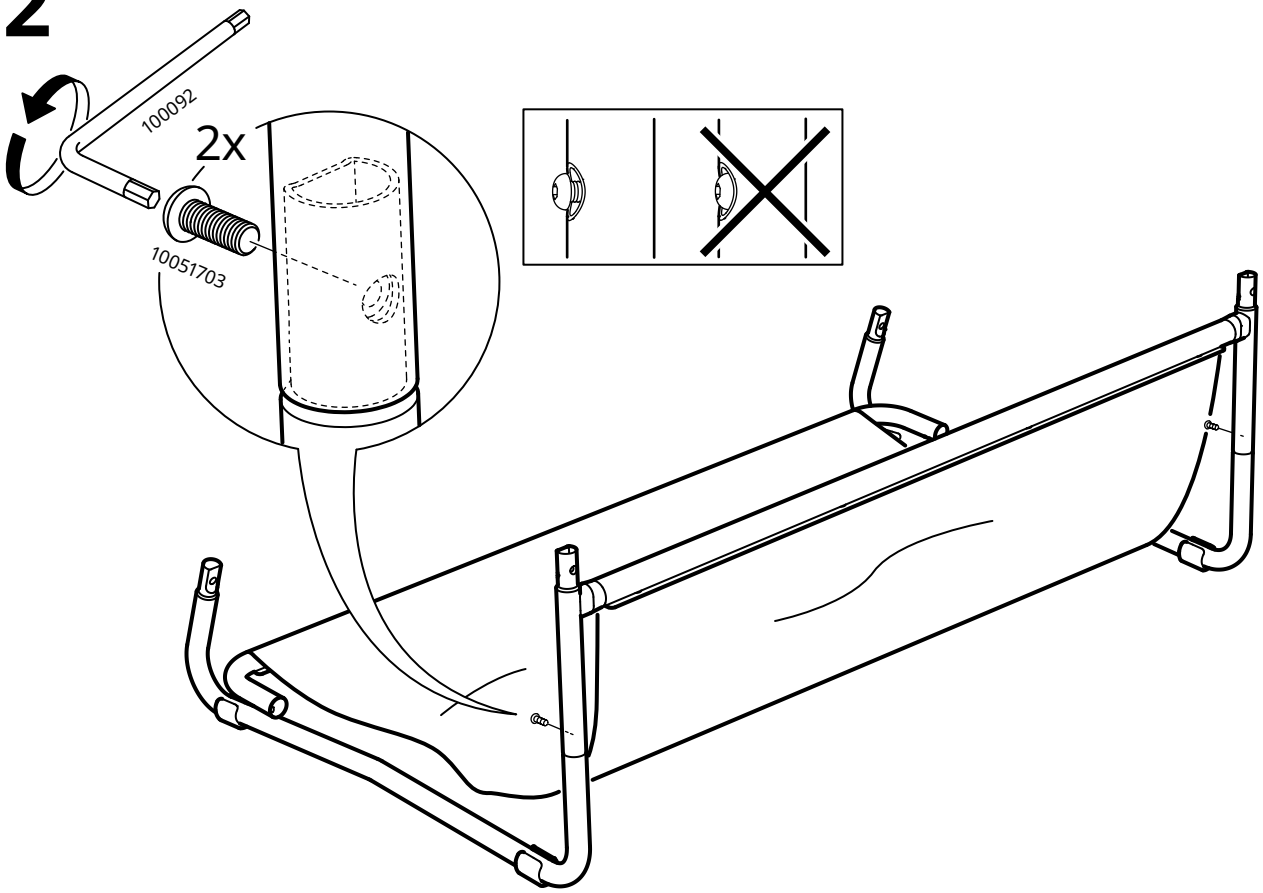

3

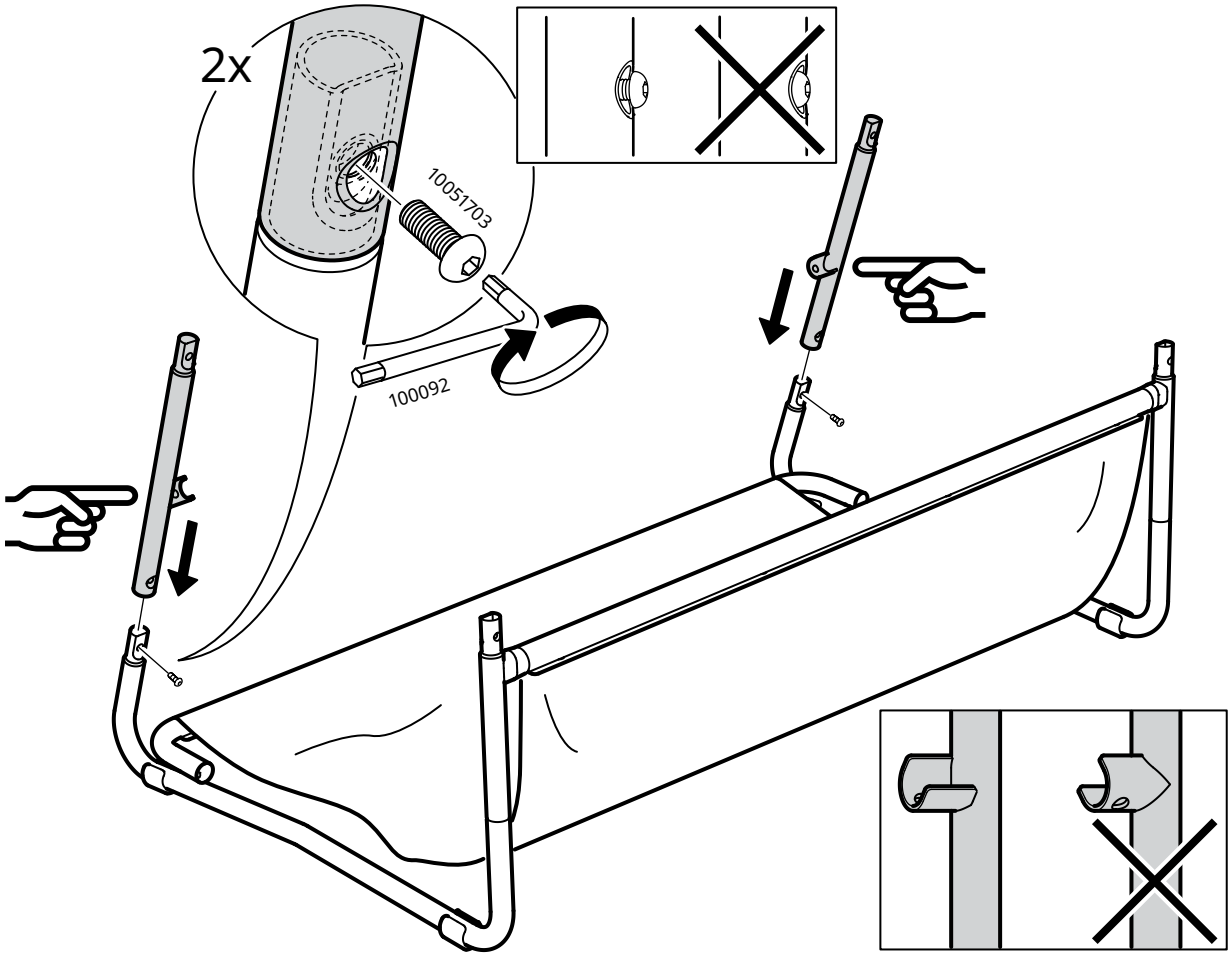

4

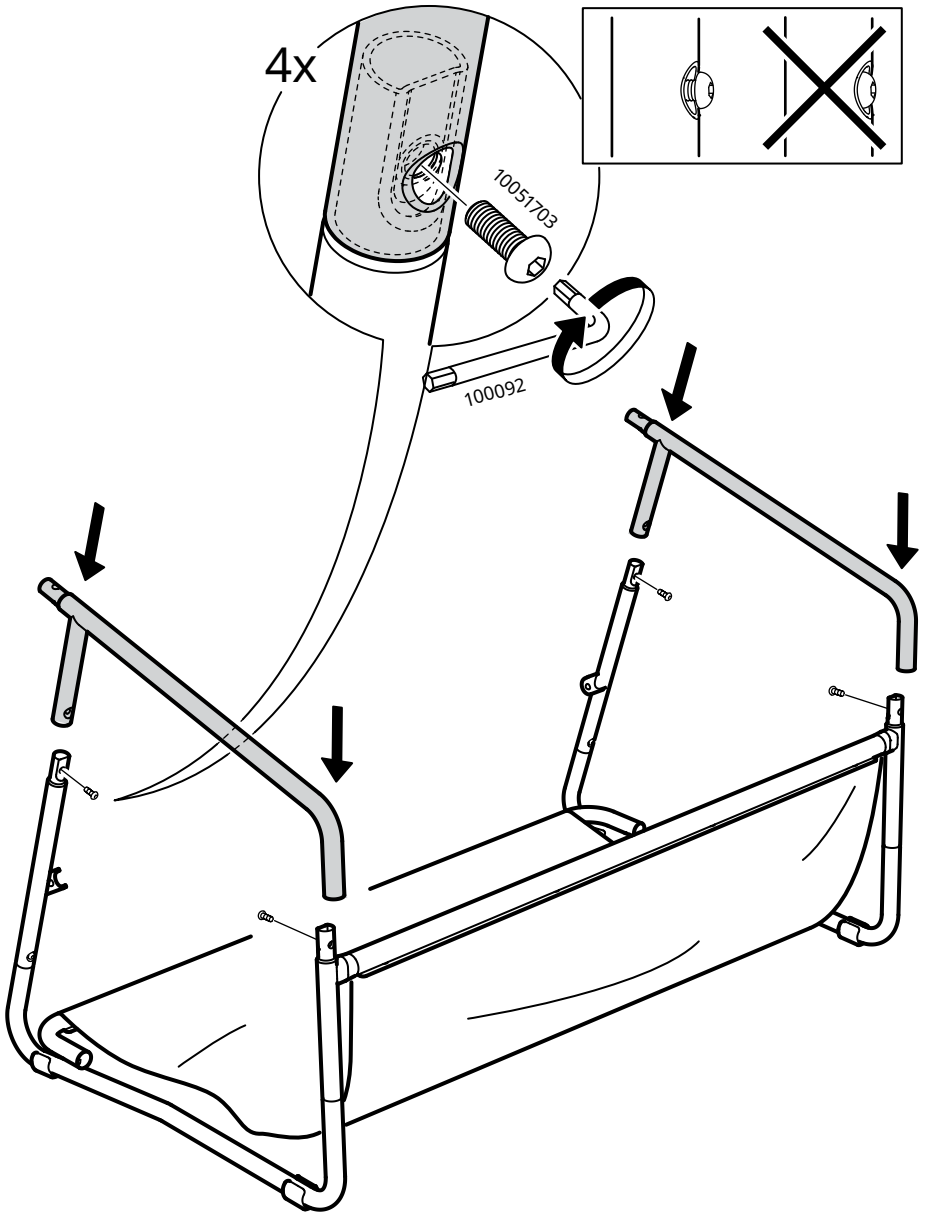

5

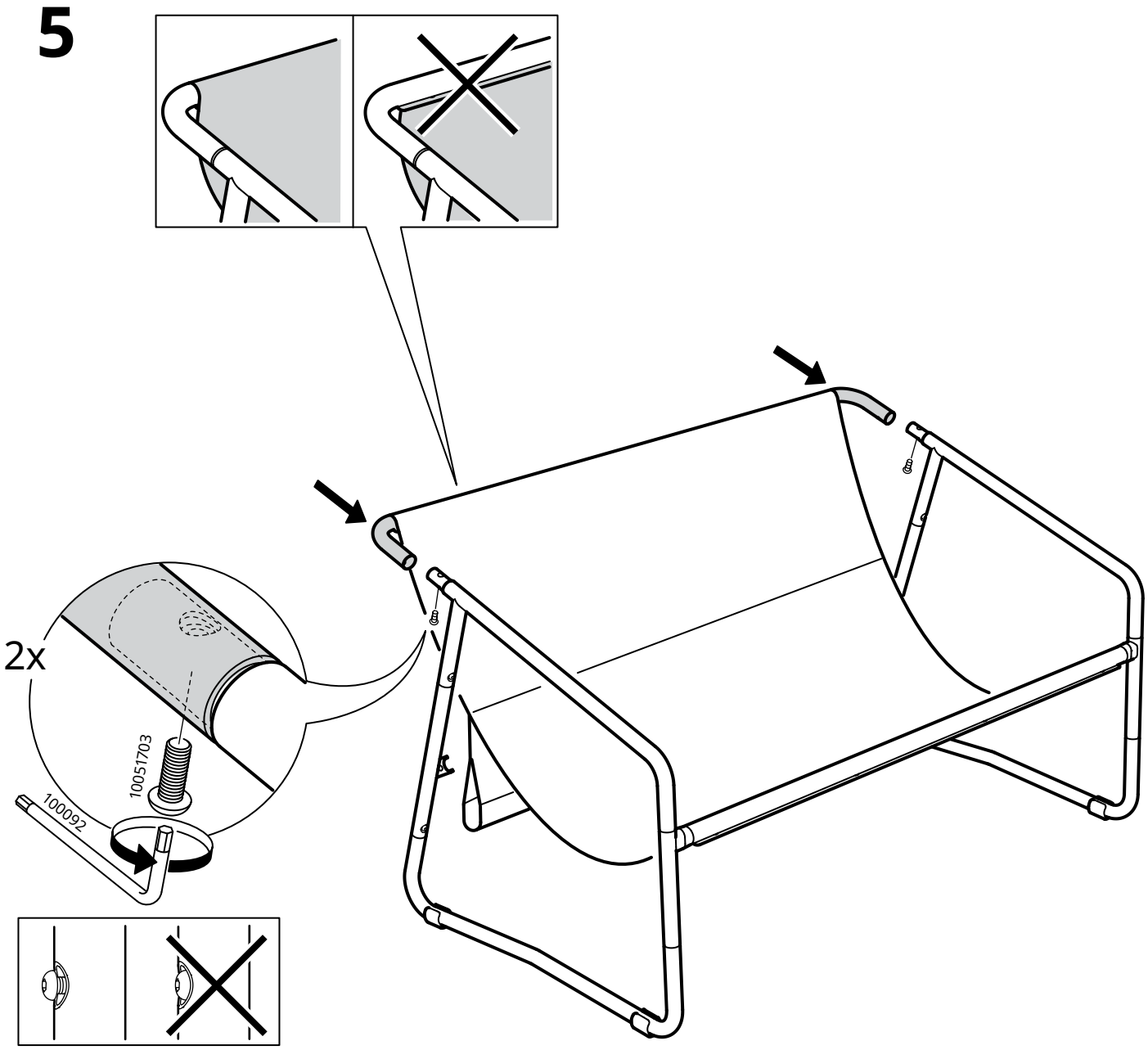

6

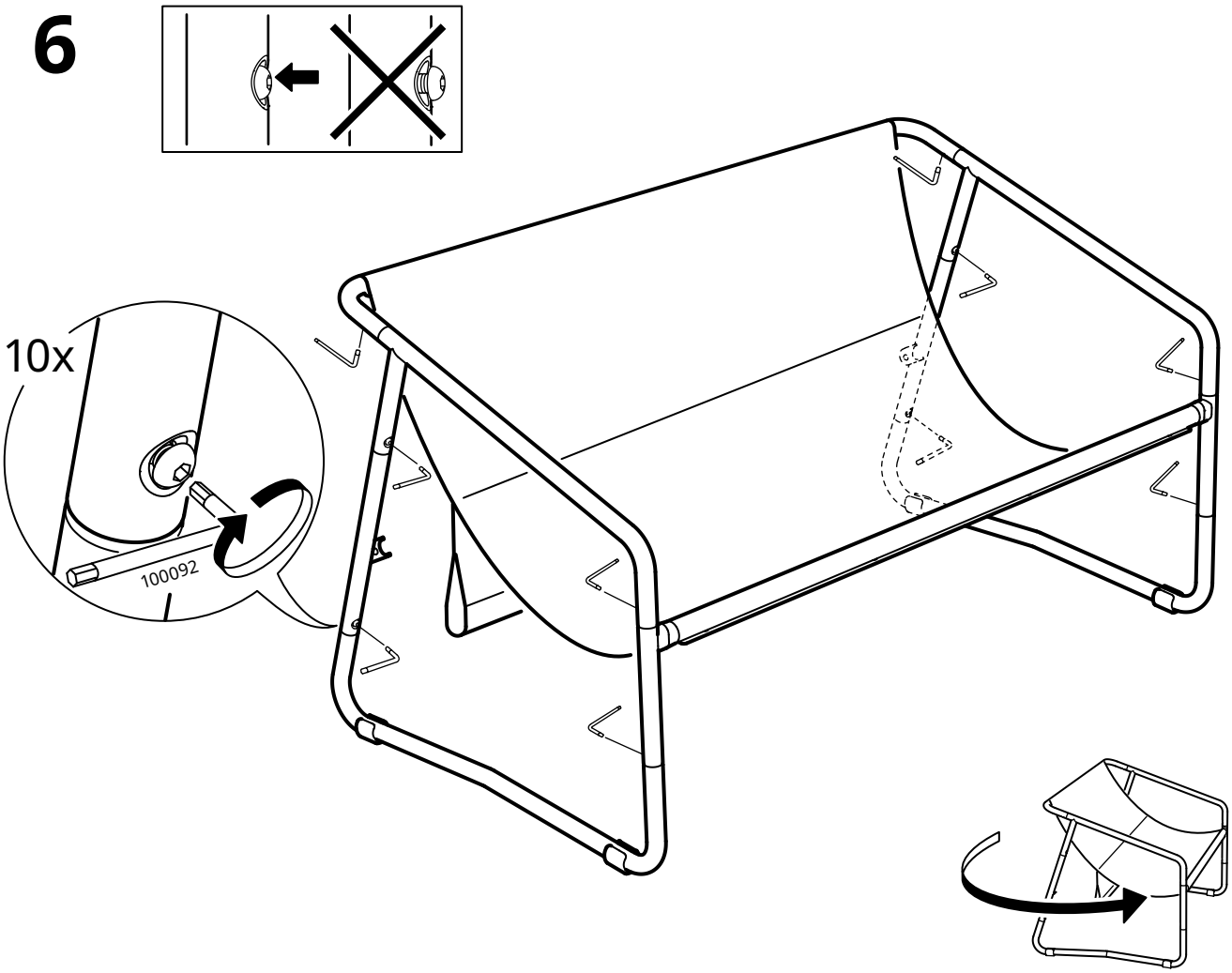

7

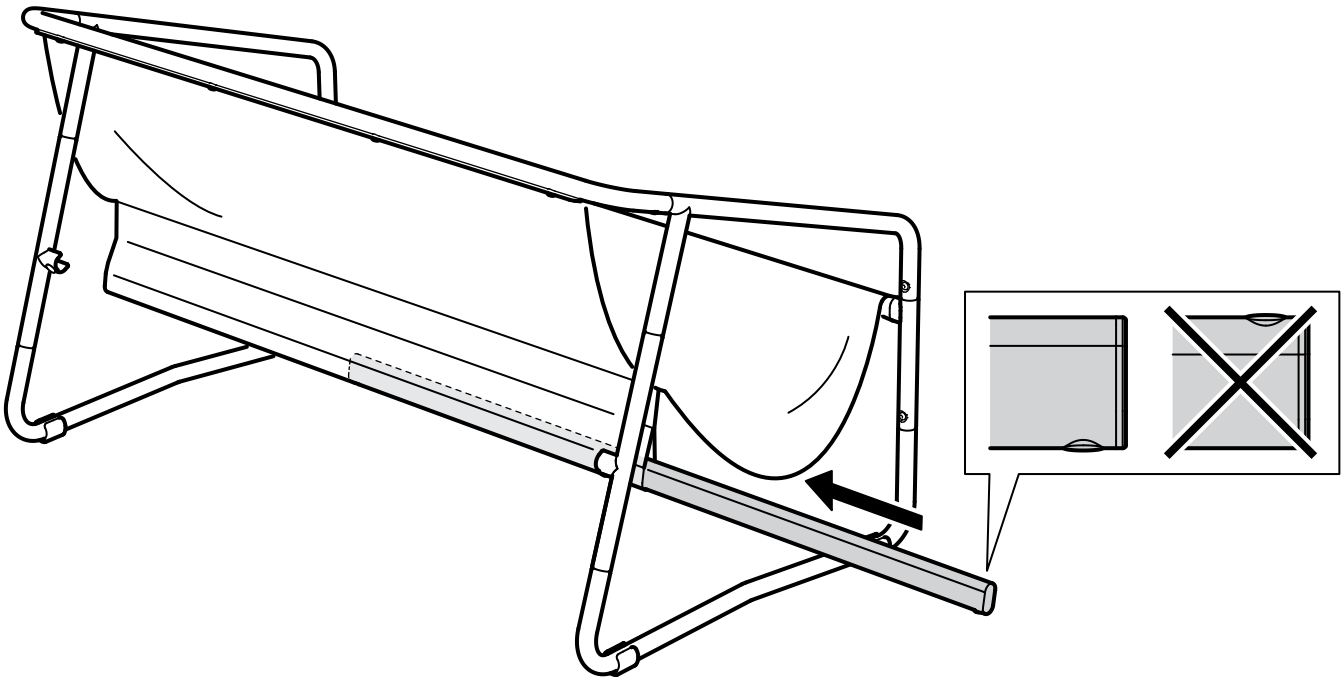

8

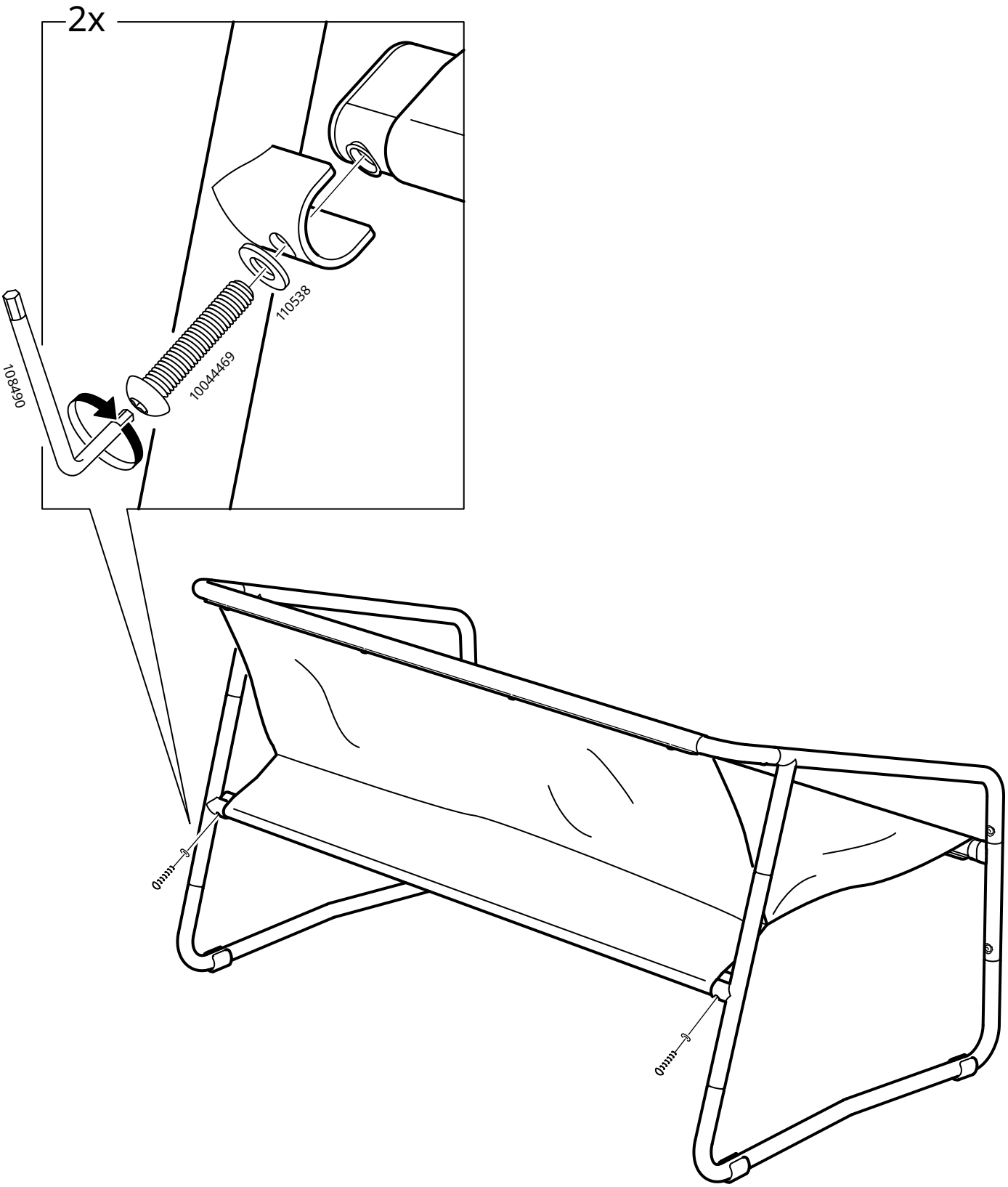

9

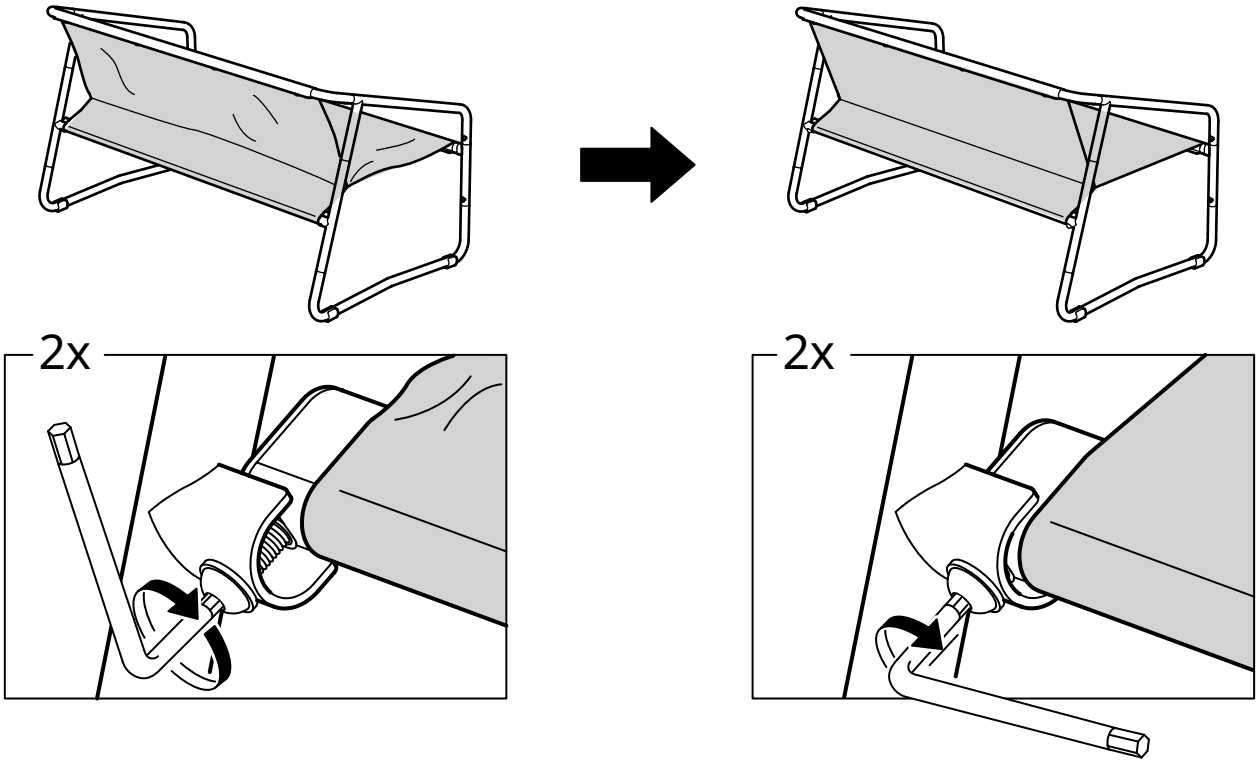

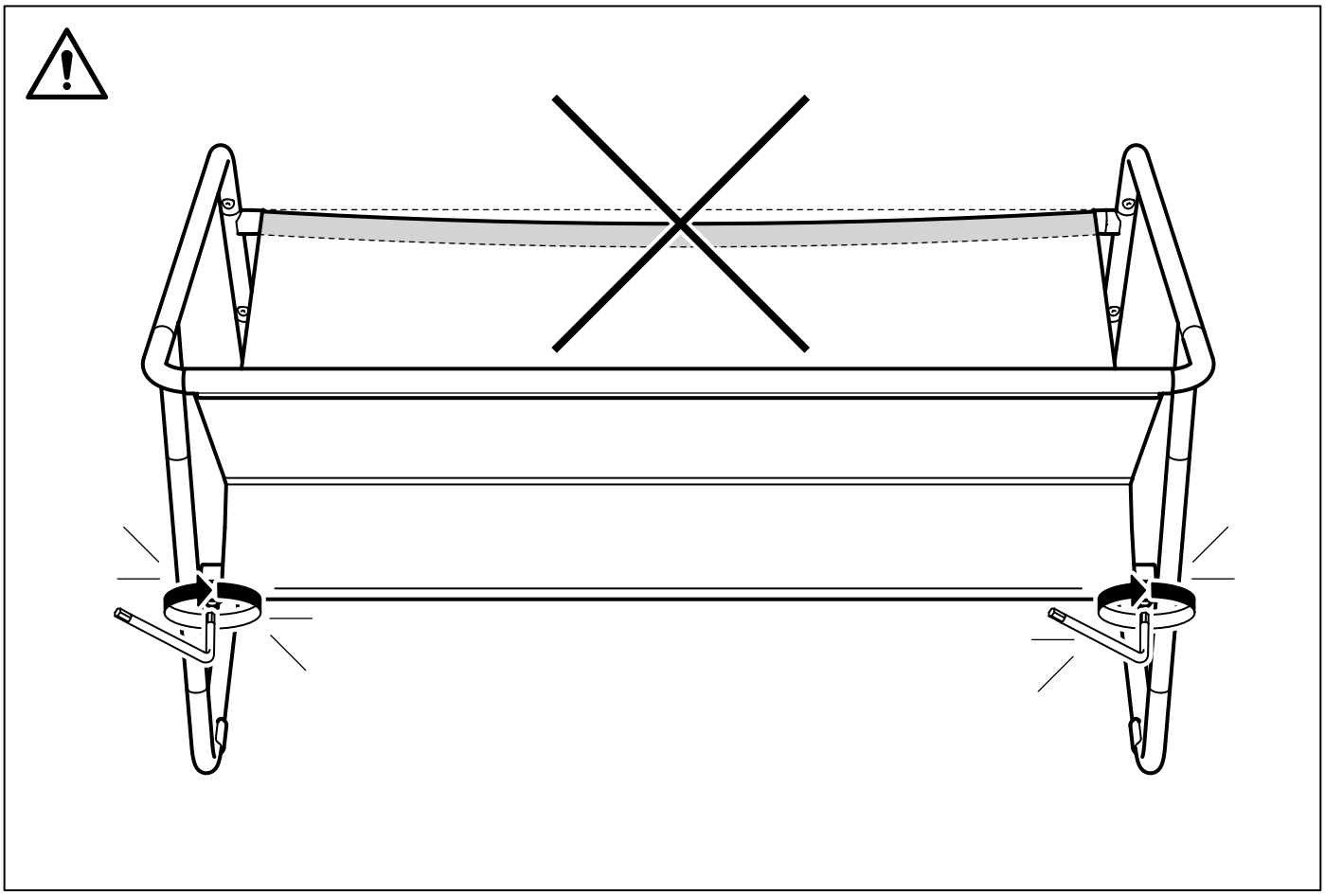

10

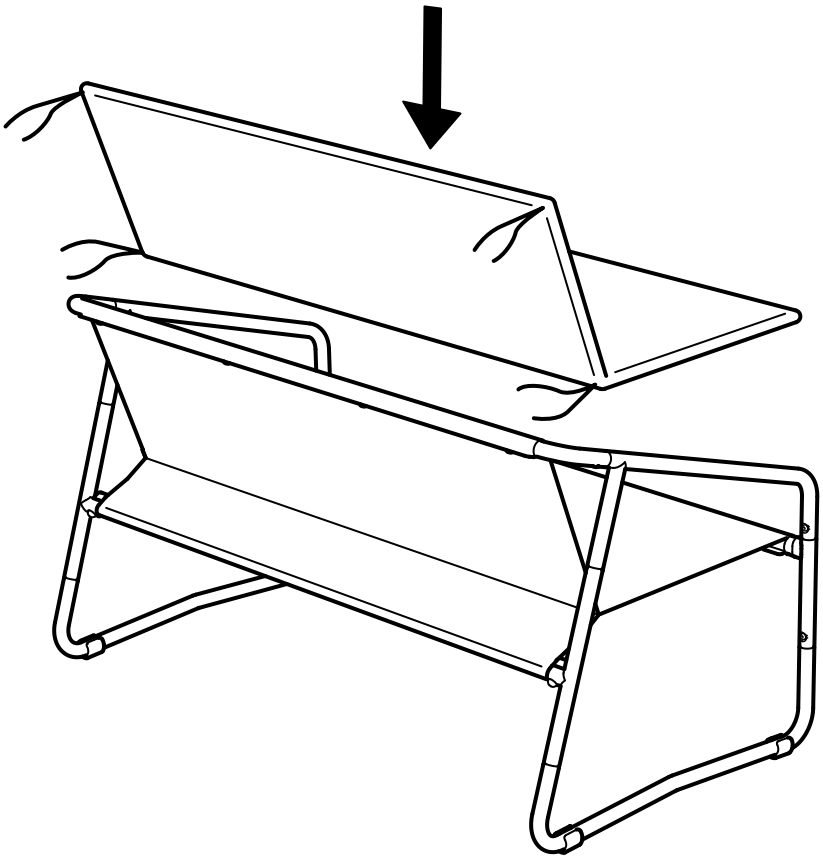

11

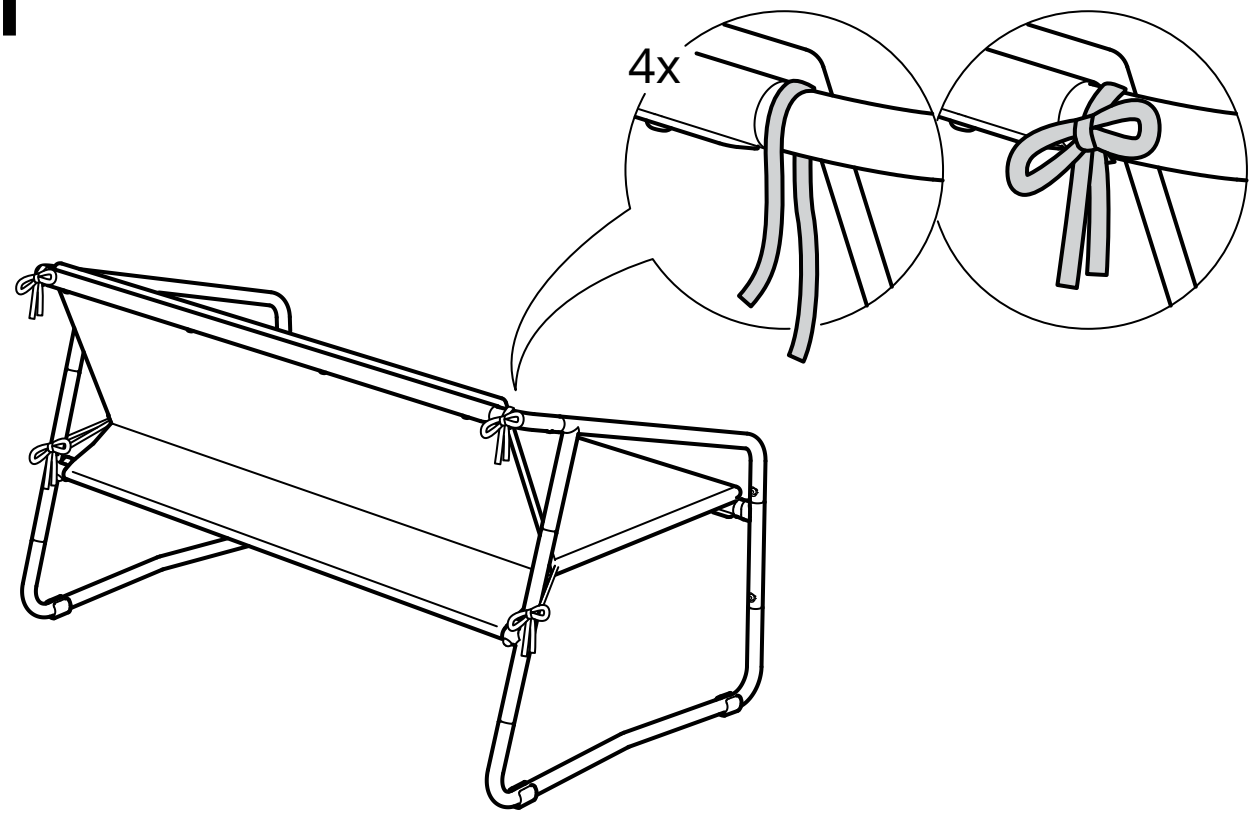

© Inter IKEA Systems B.V. 2019