HEMNES

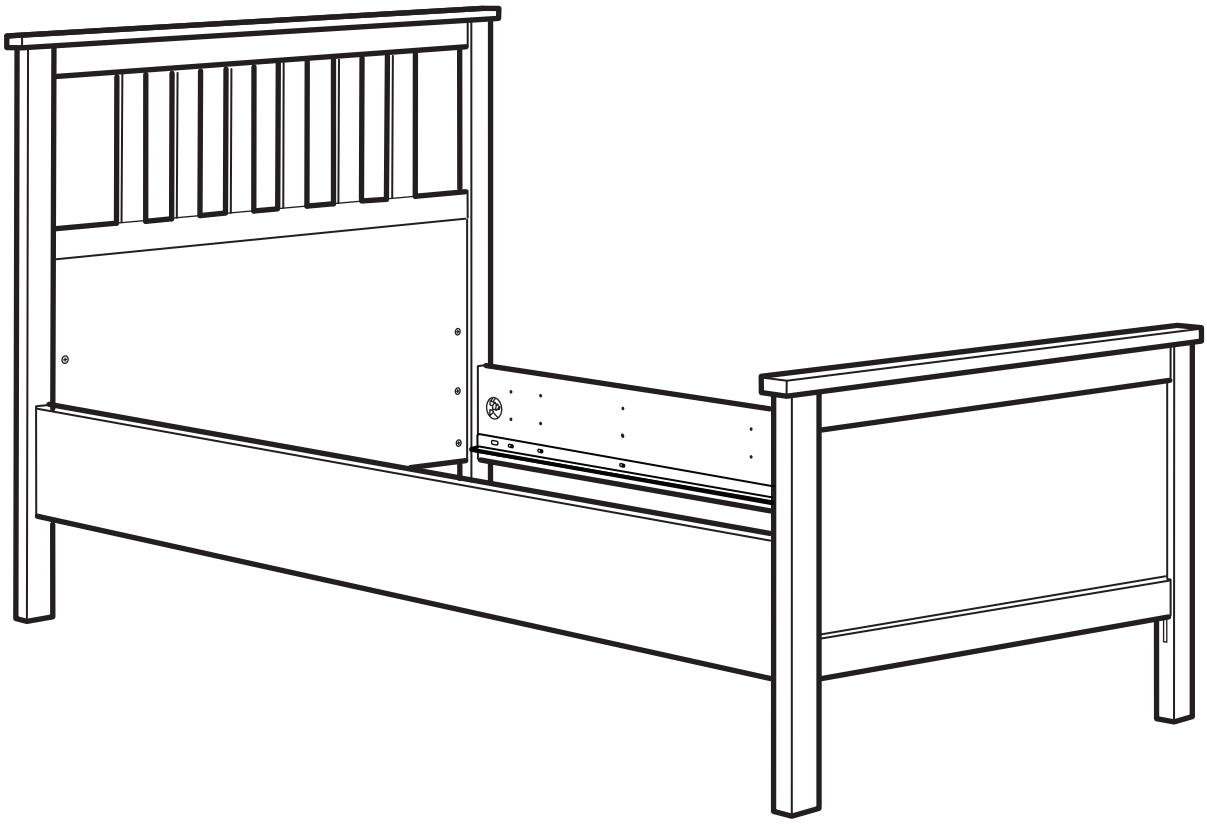

Design and Quality
IKEA of Sweden

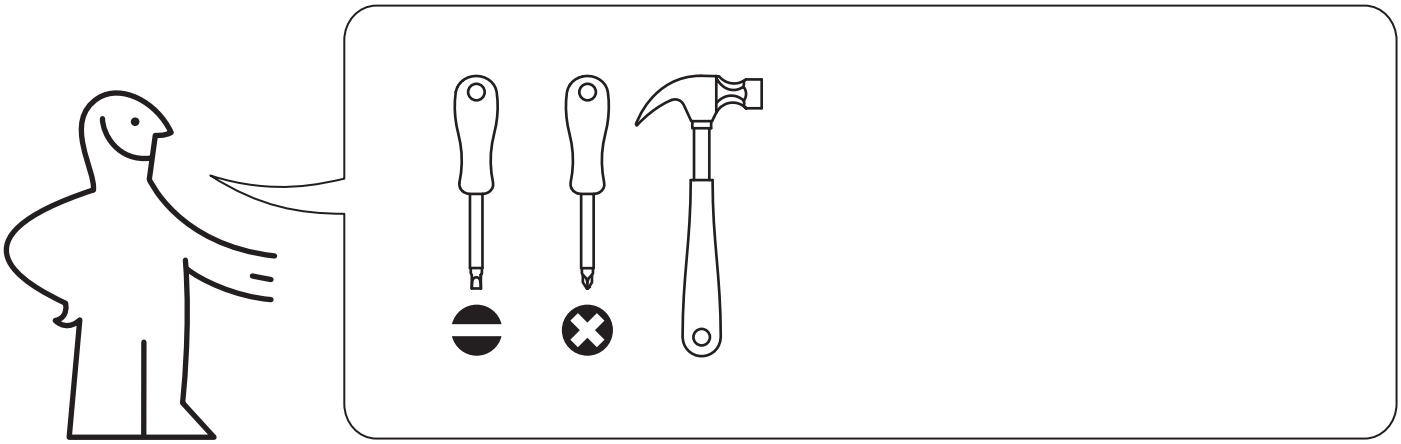

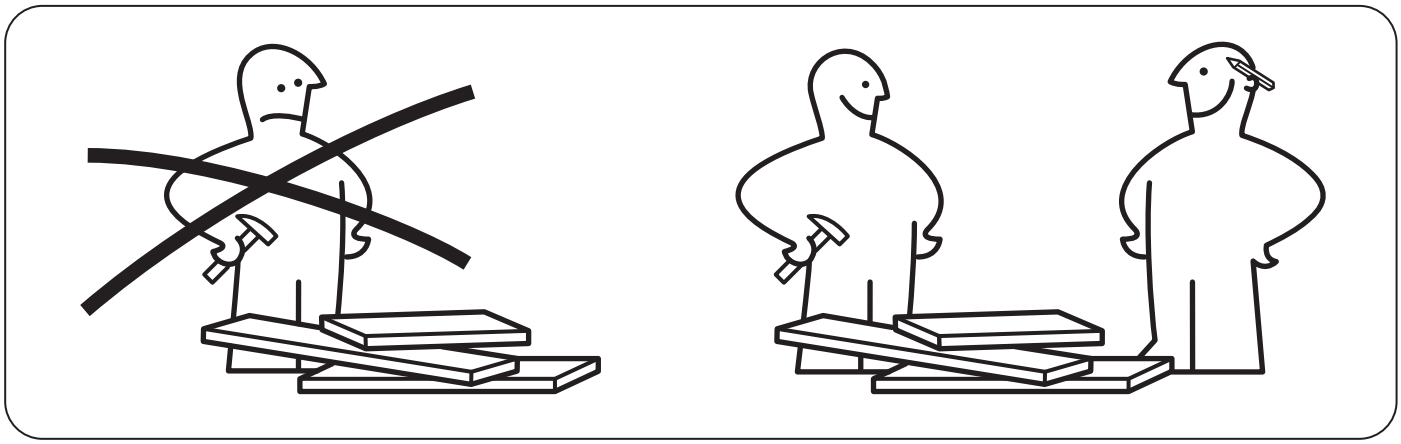

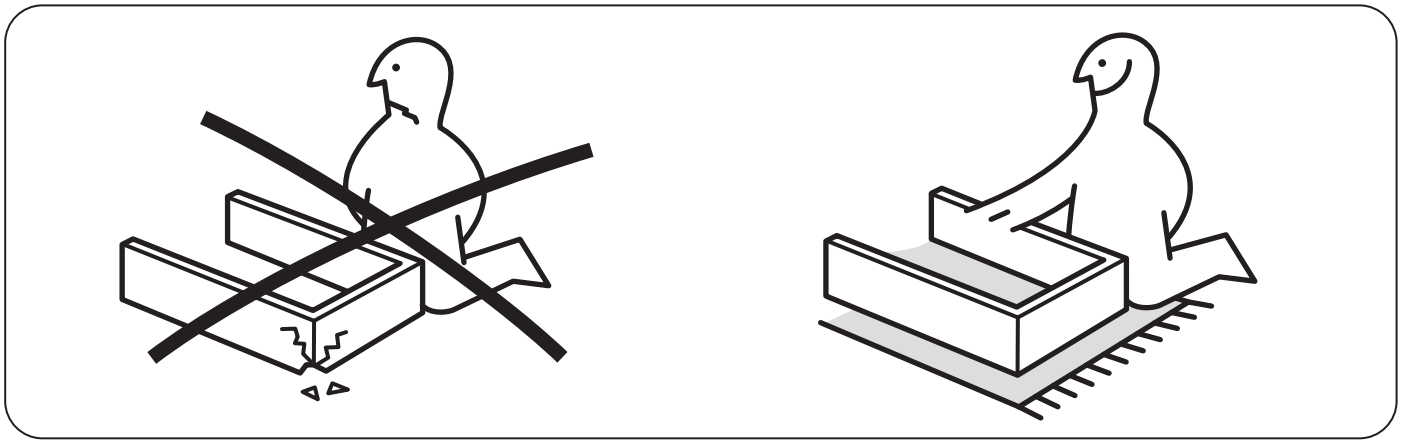

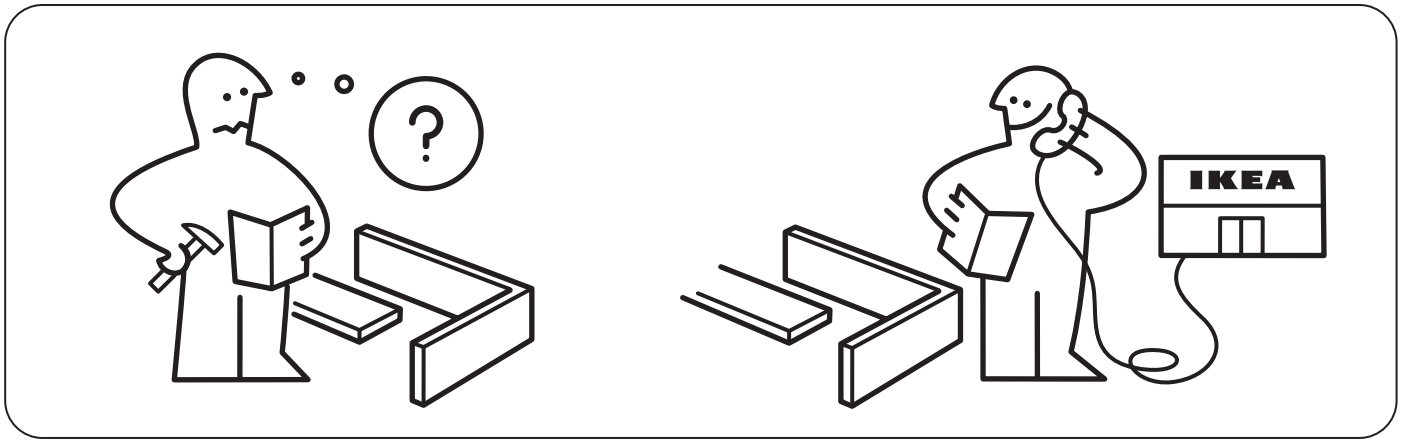
?
IKEA

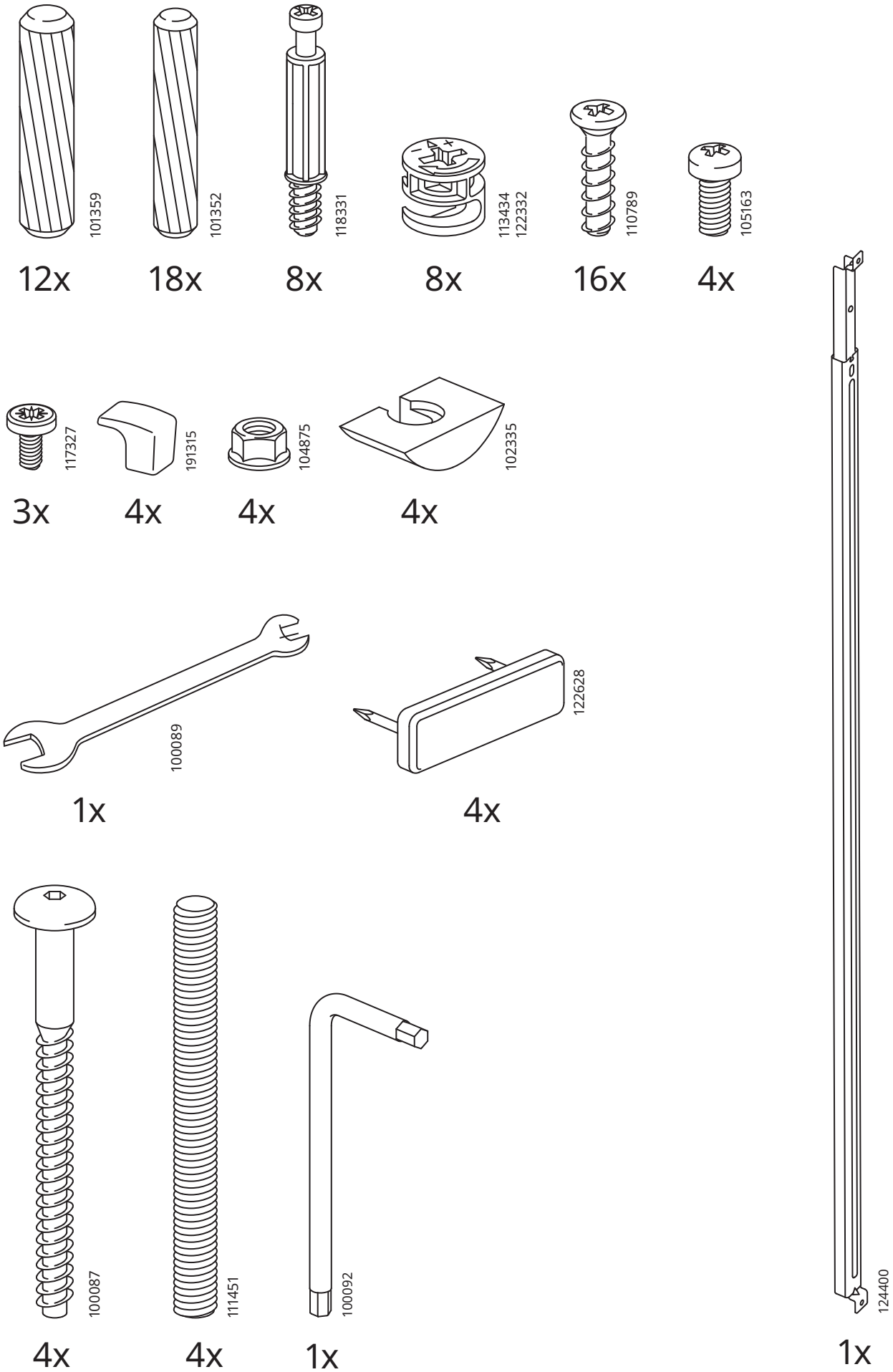
101359
12x
101352
18x
118331
8x
113434
122332
8x
110789
16x
105163
4x
117327
3x
191315
4x
104875
4x
102335
4x
100089
1x
122628
4x
100087
4x
111451
4x
100092
1x
124400
1x

1

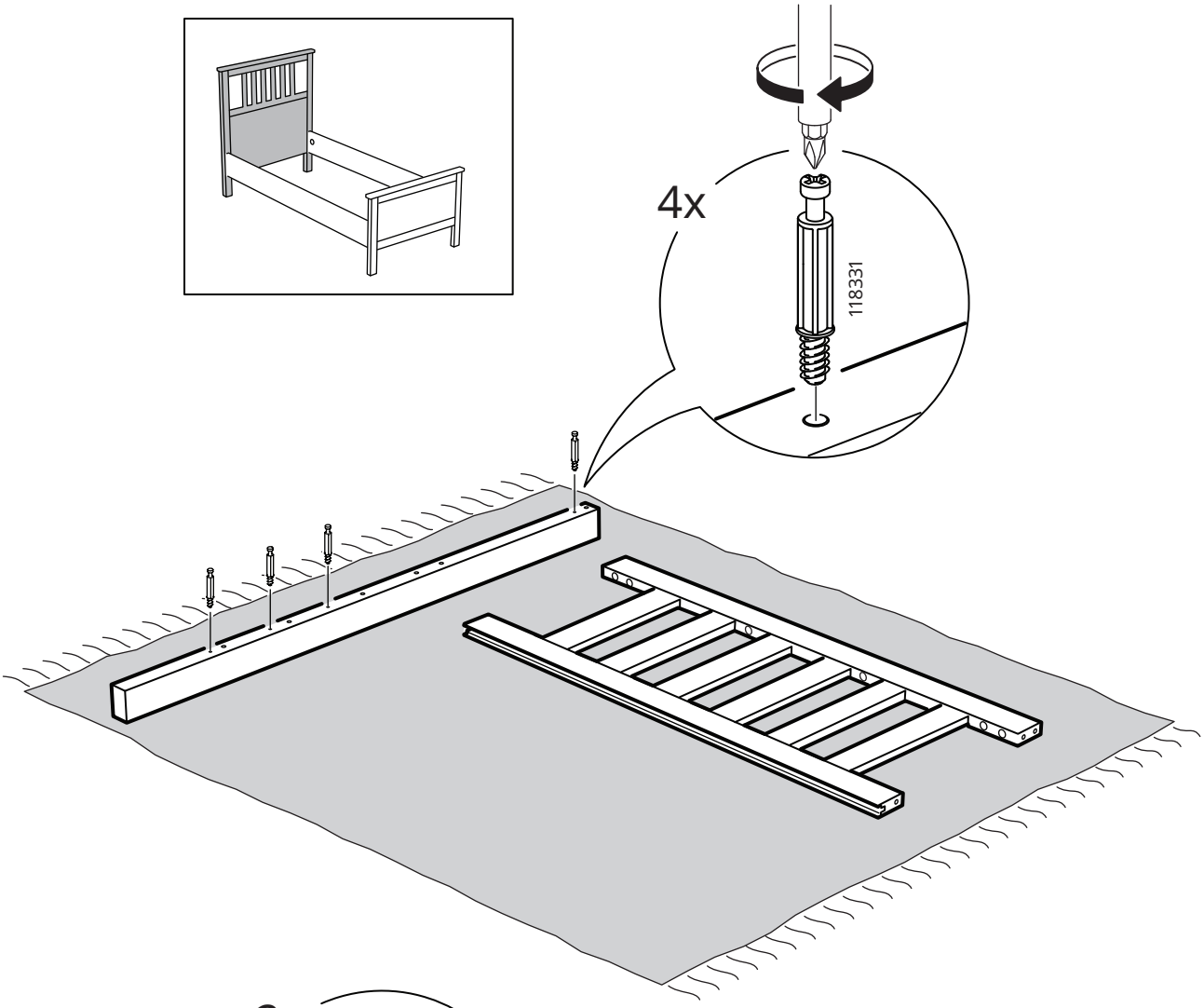

2

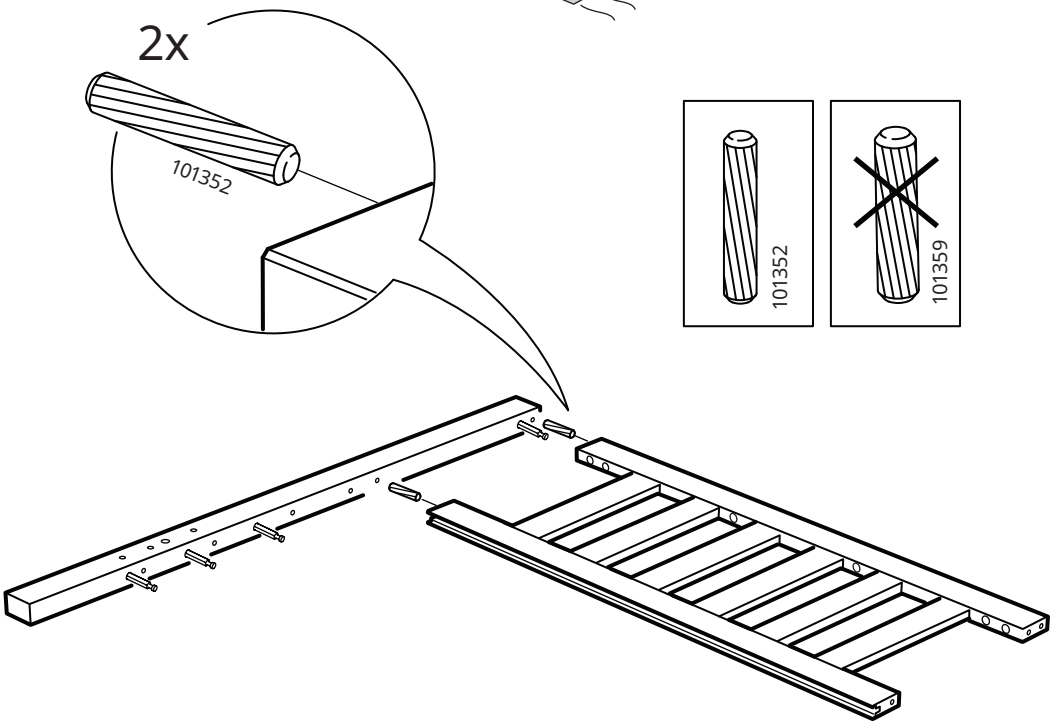

3

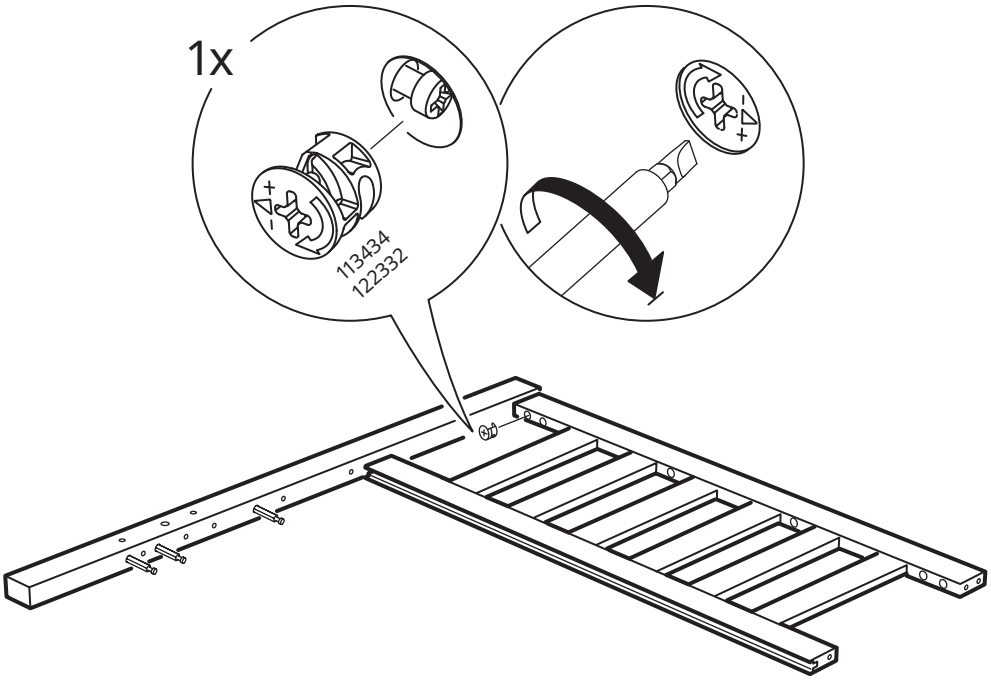

4

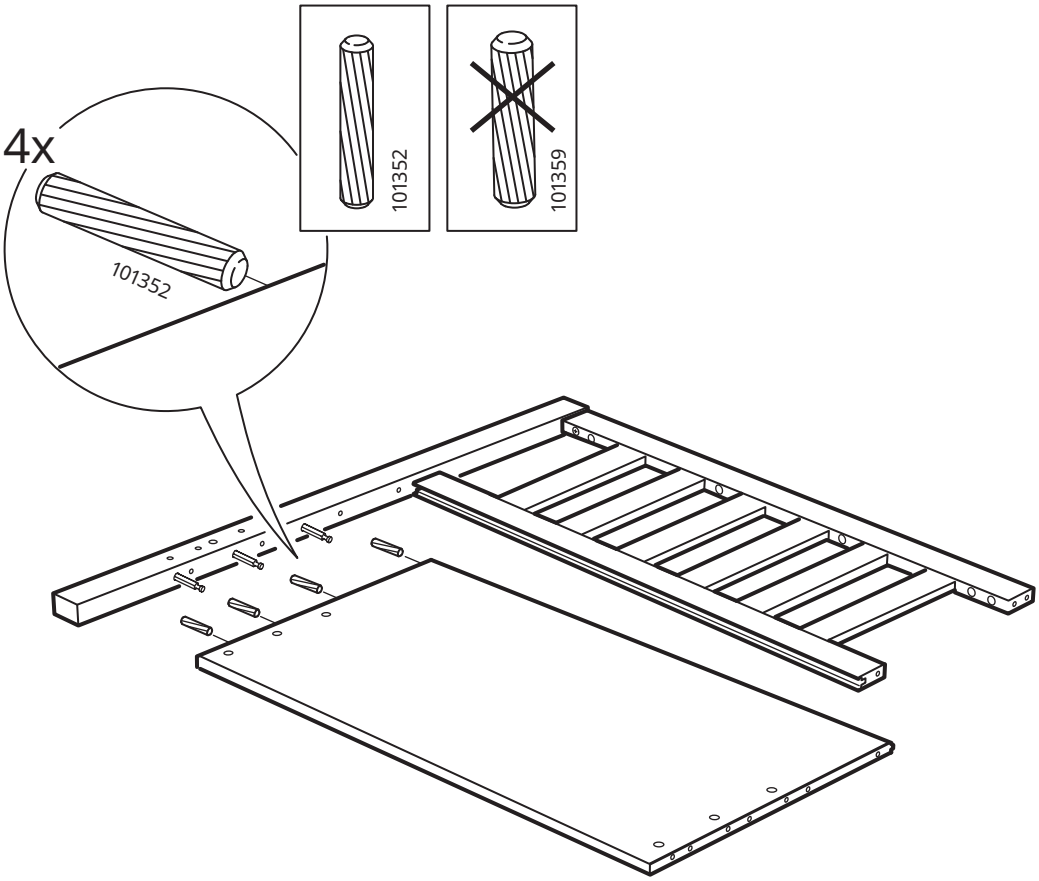

5

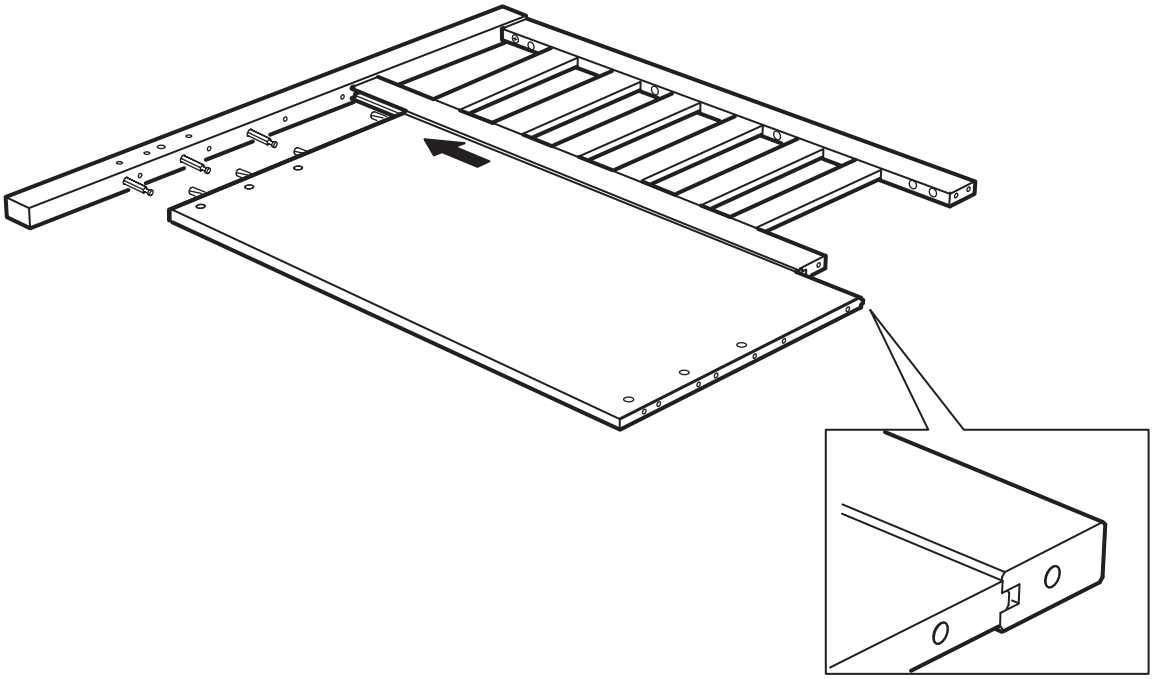

6

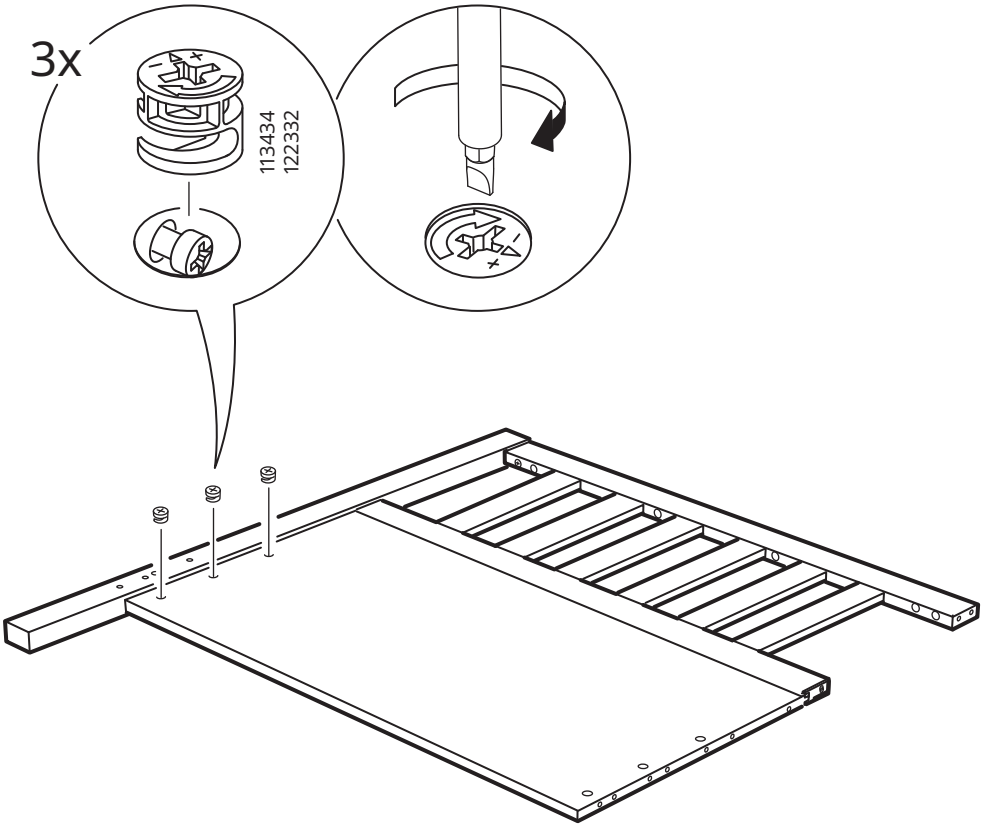

7

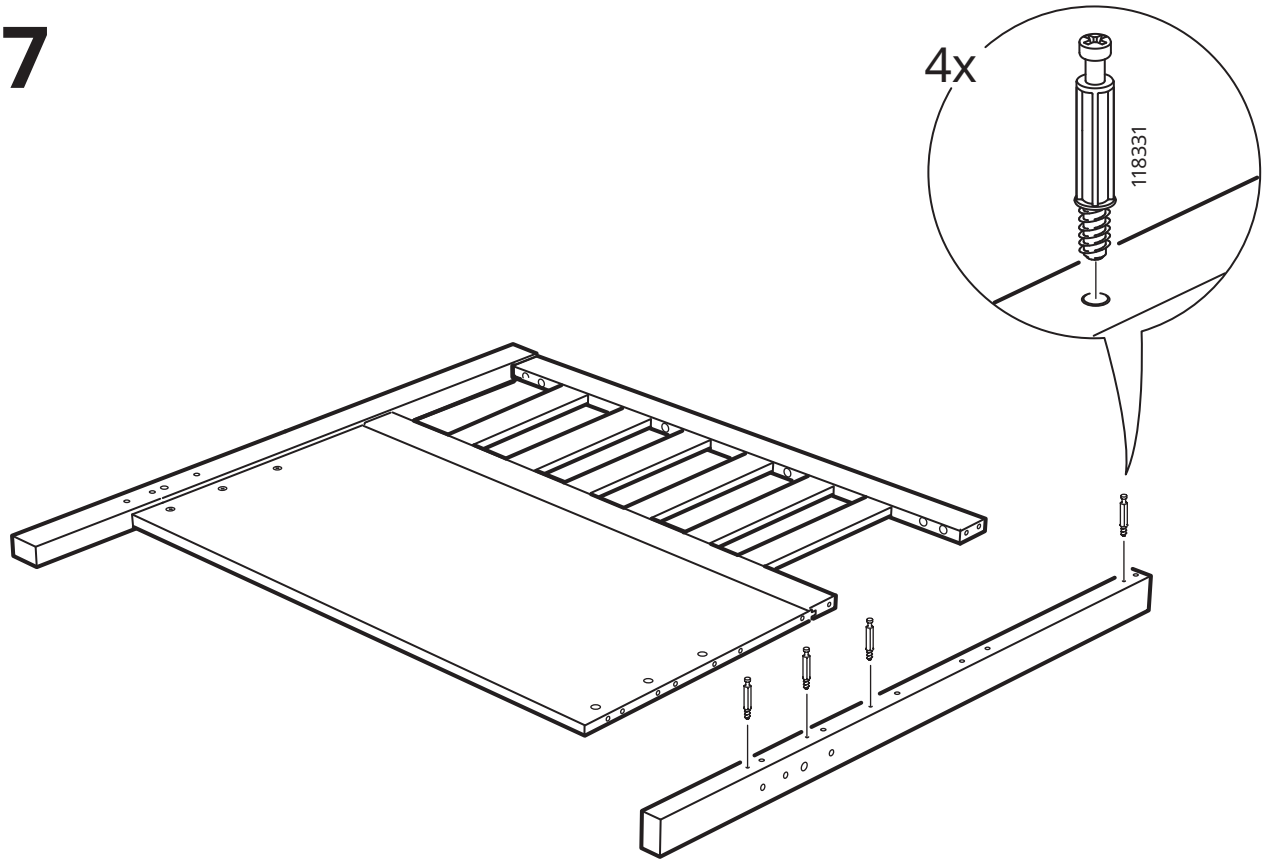

8

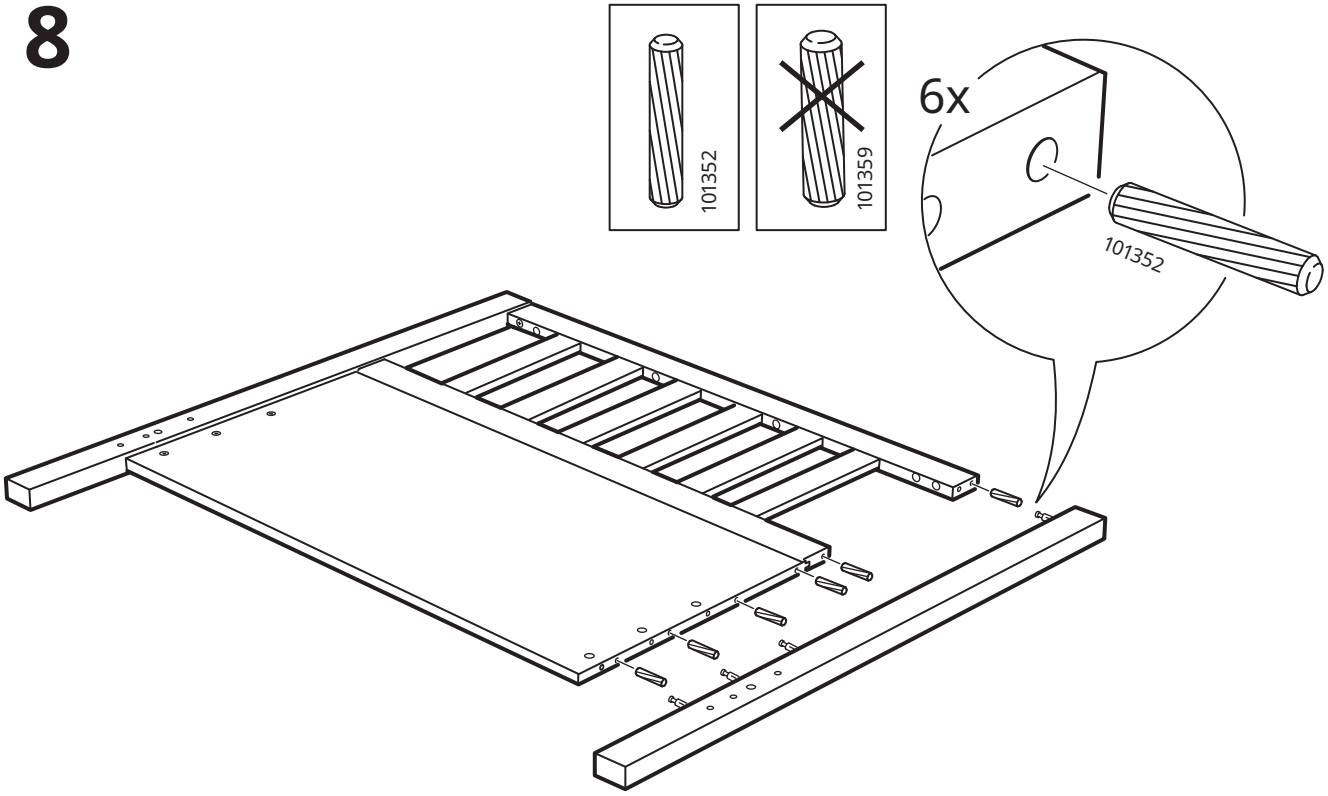

9

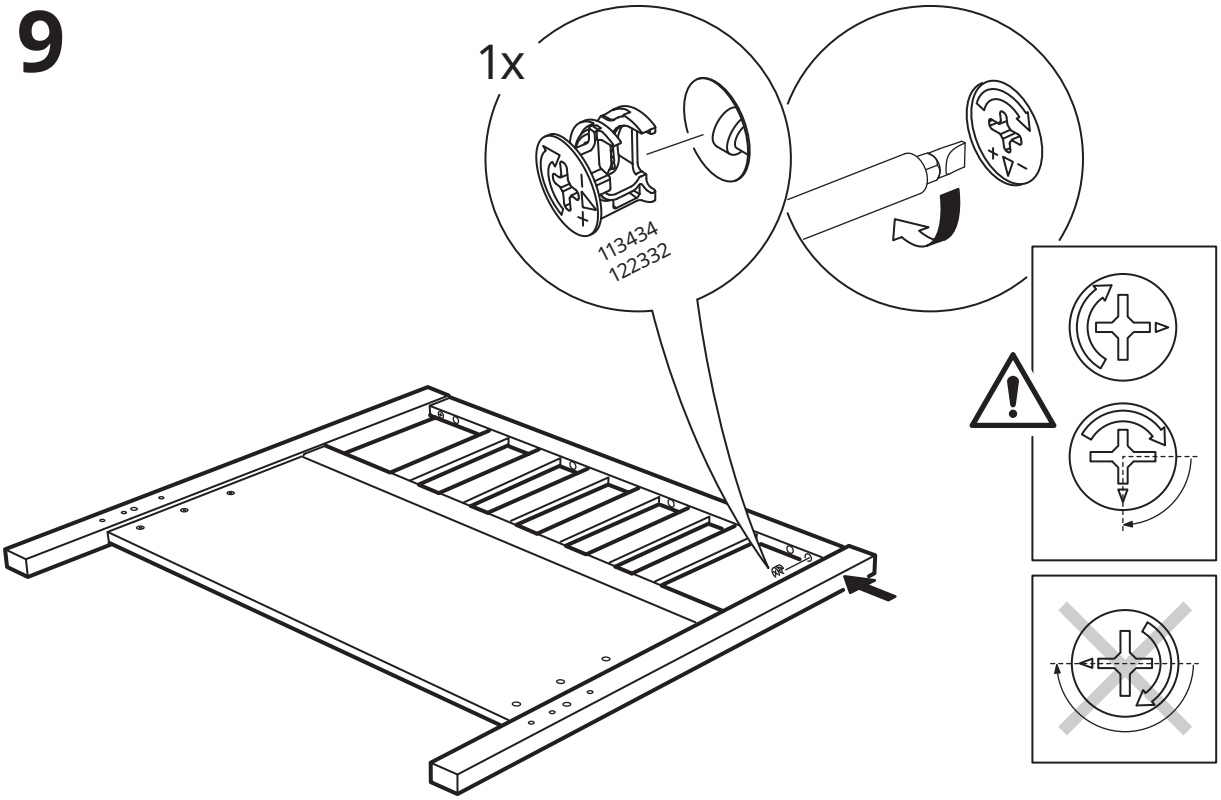

10

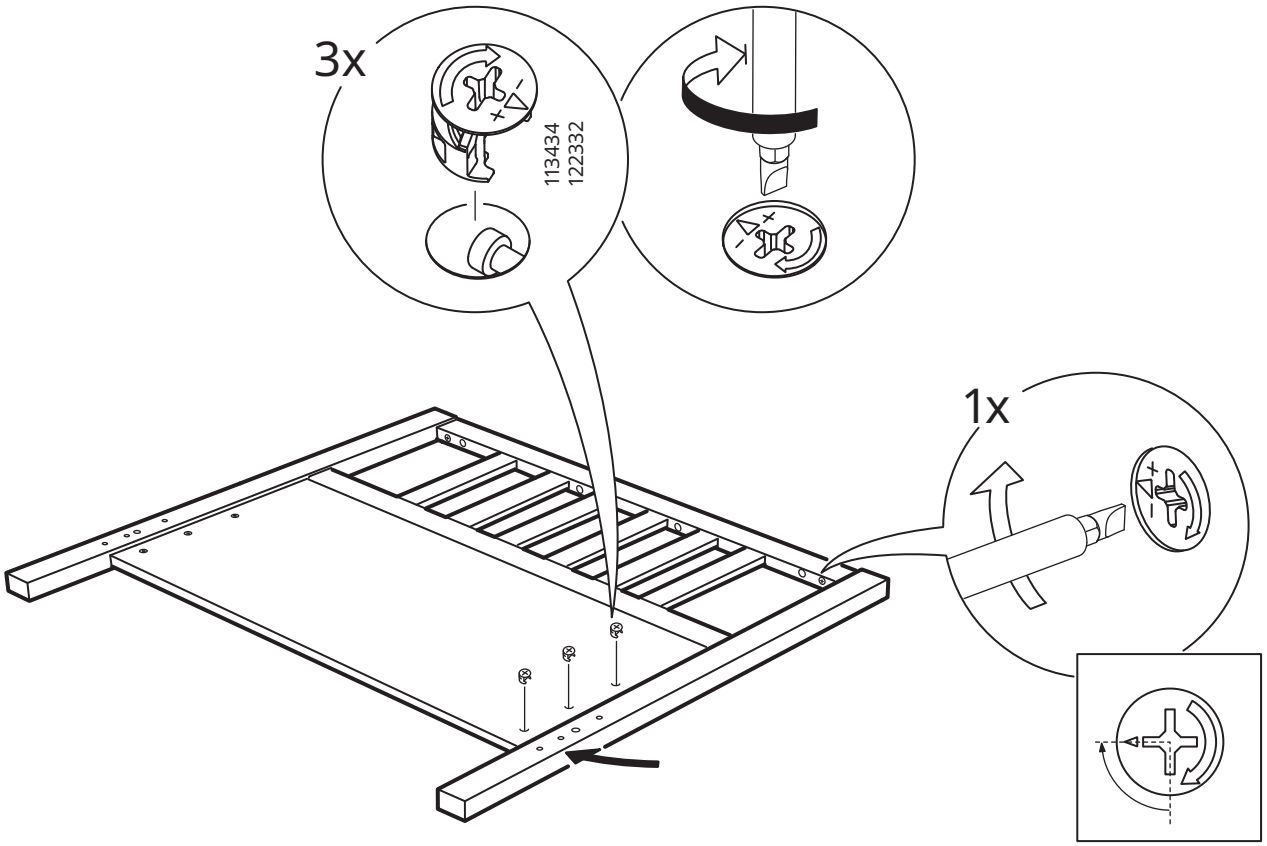

11

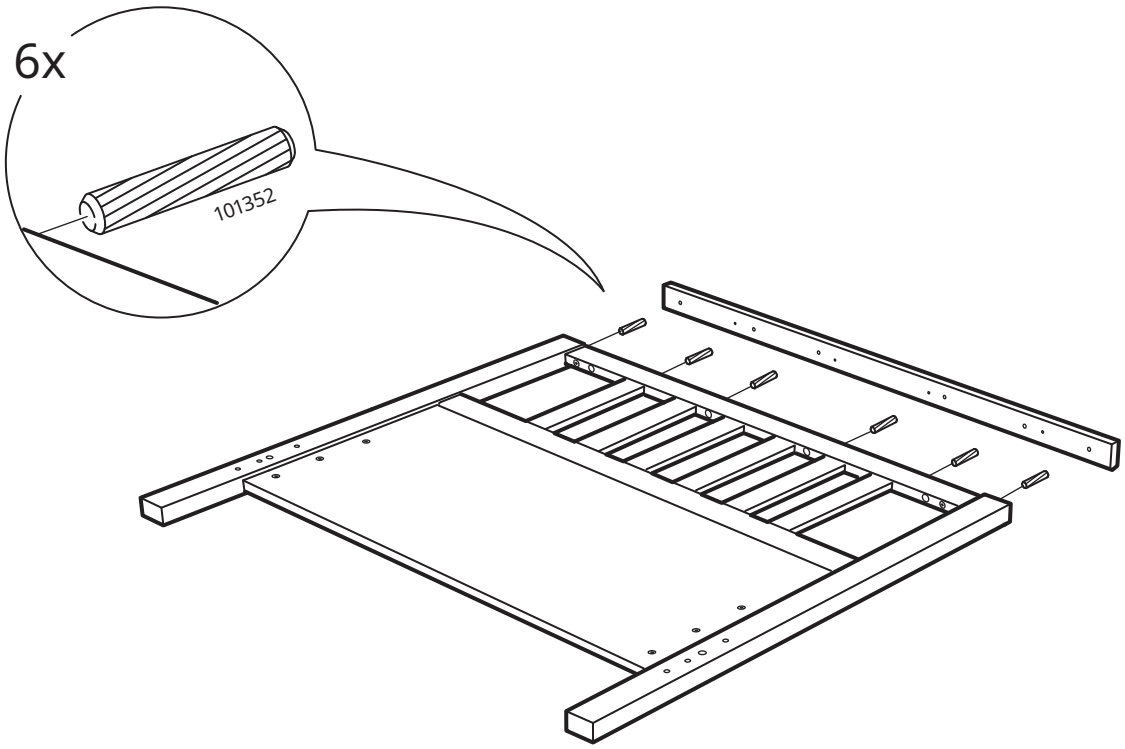

12

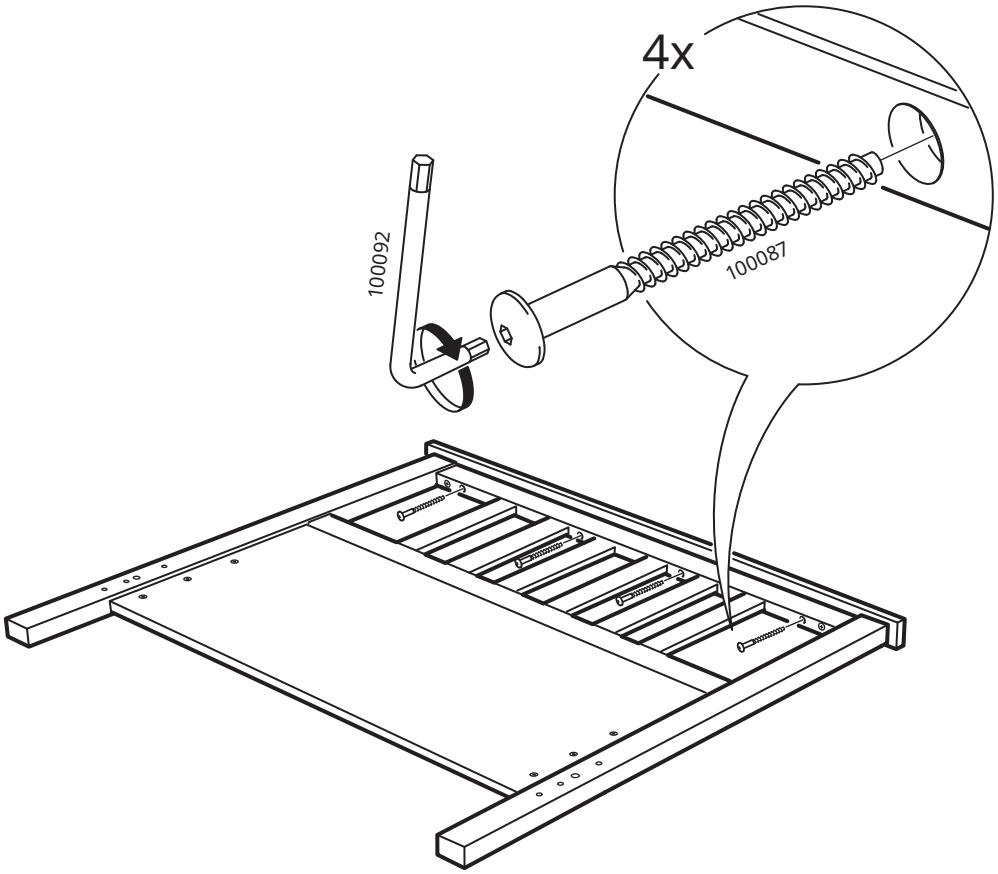

13

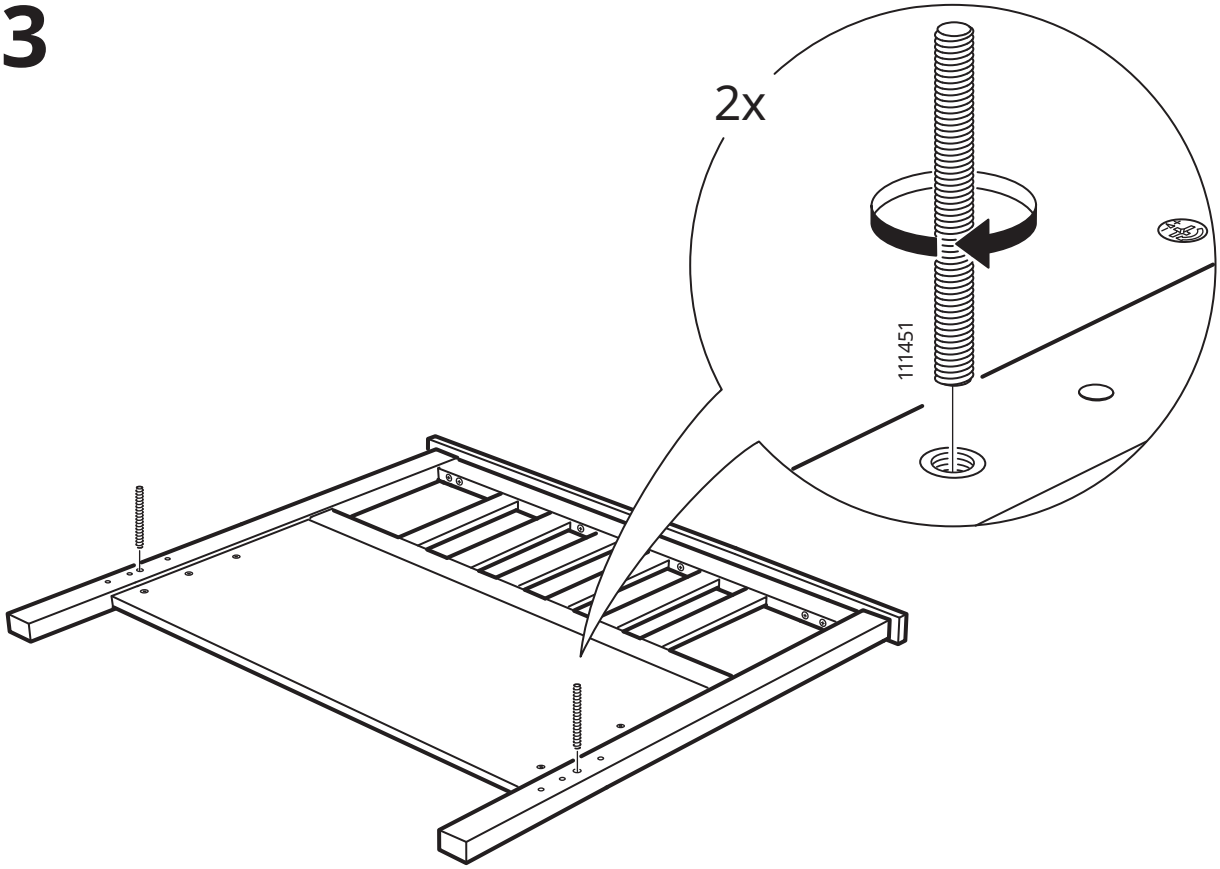

14

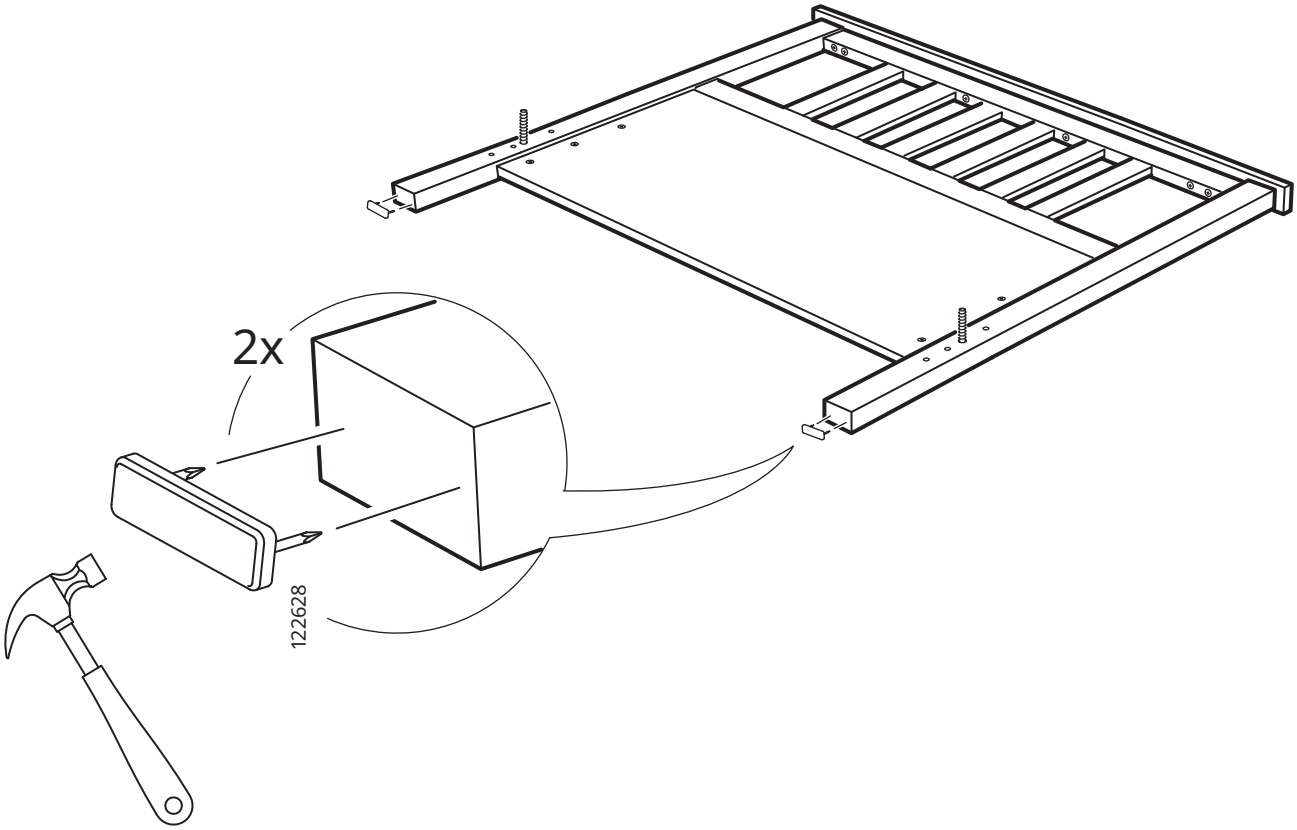

15

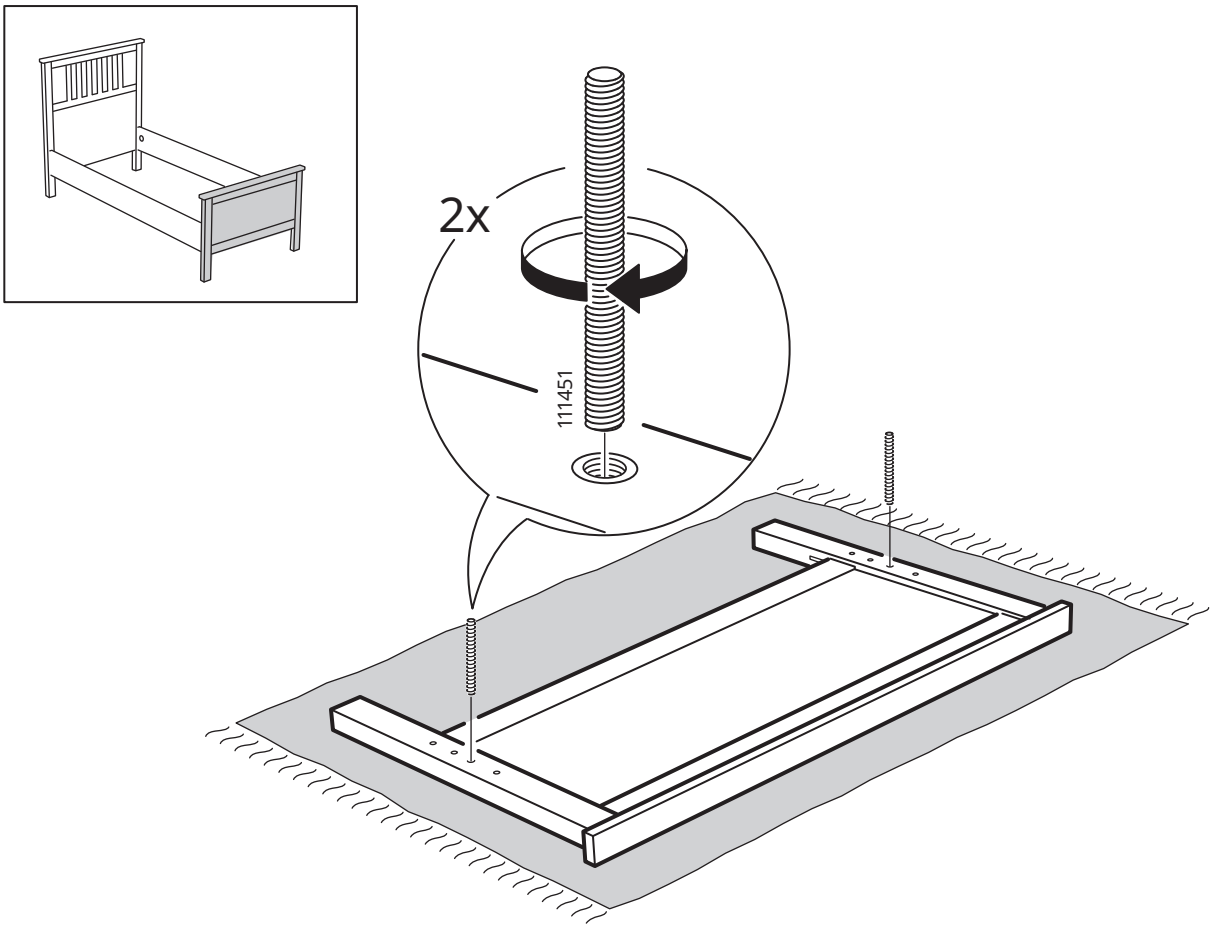

16

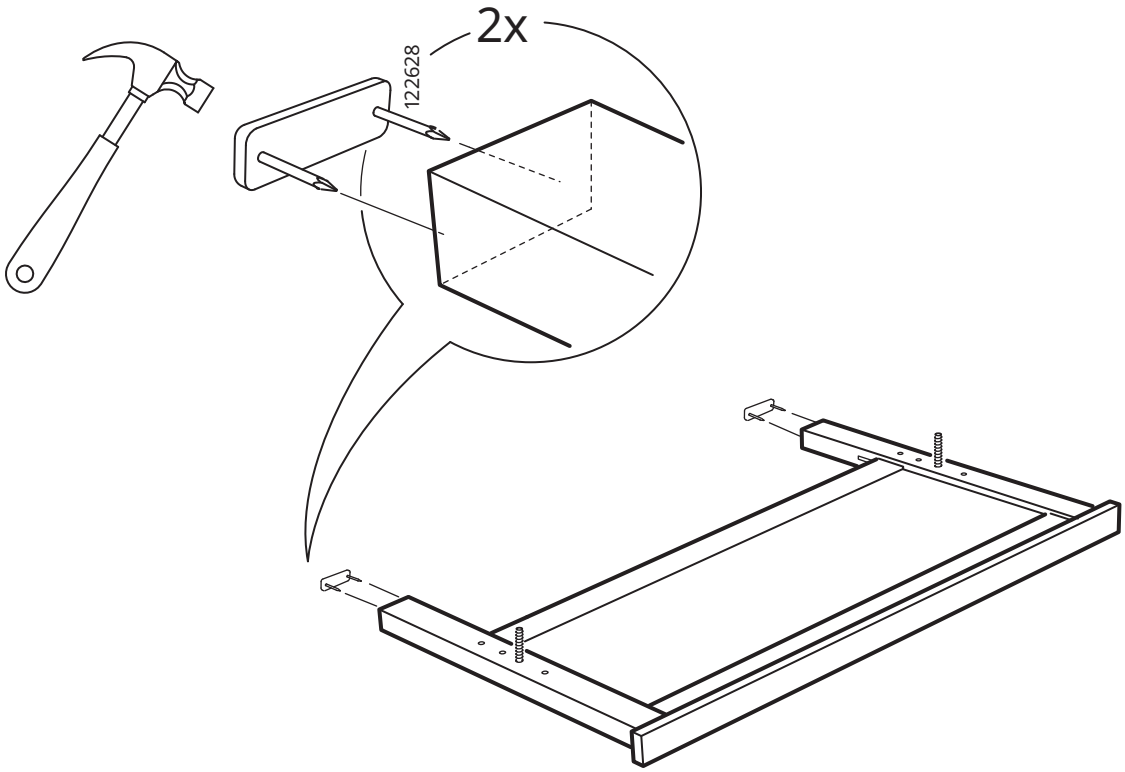

17

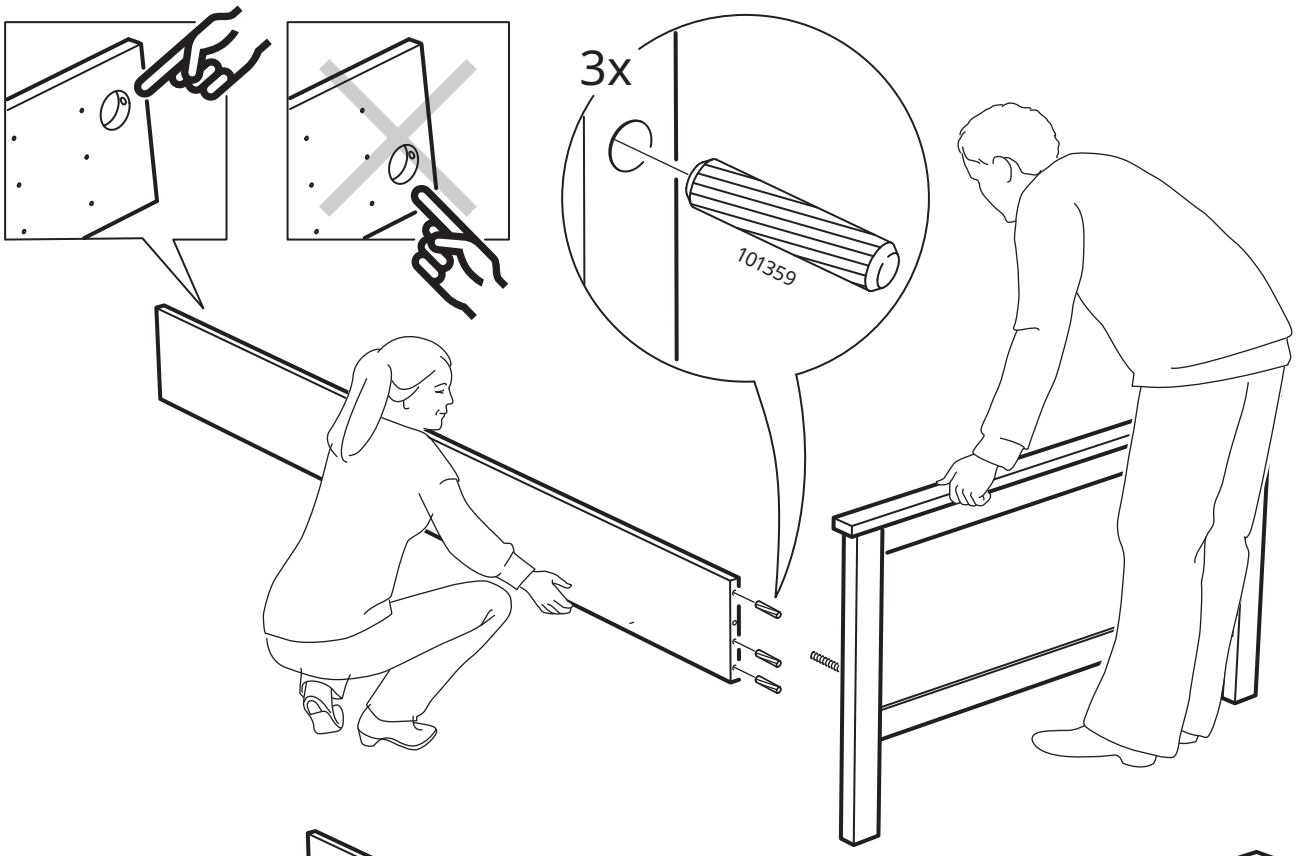

18

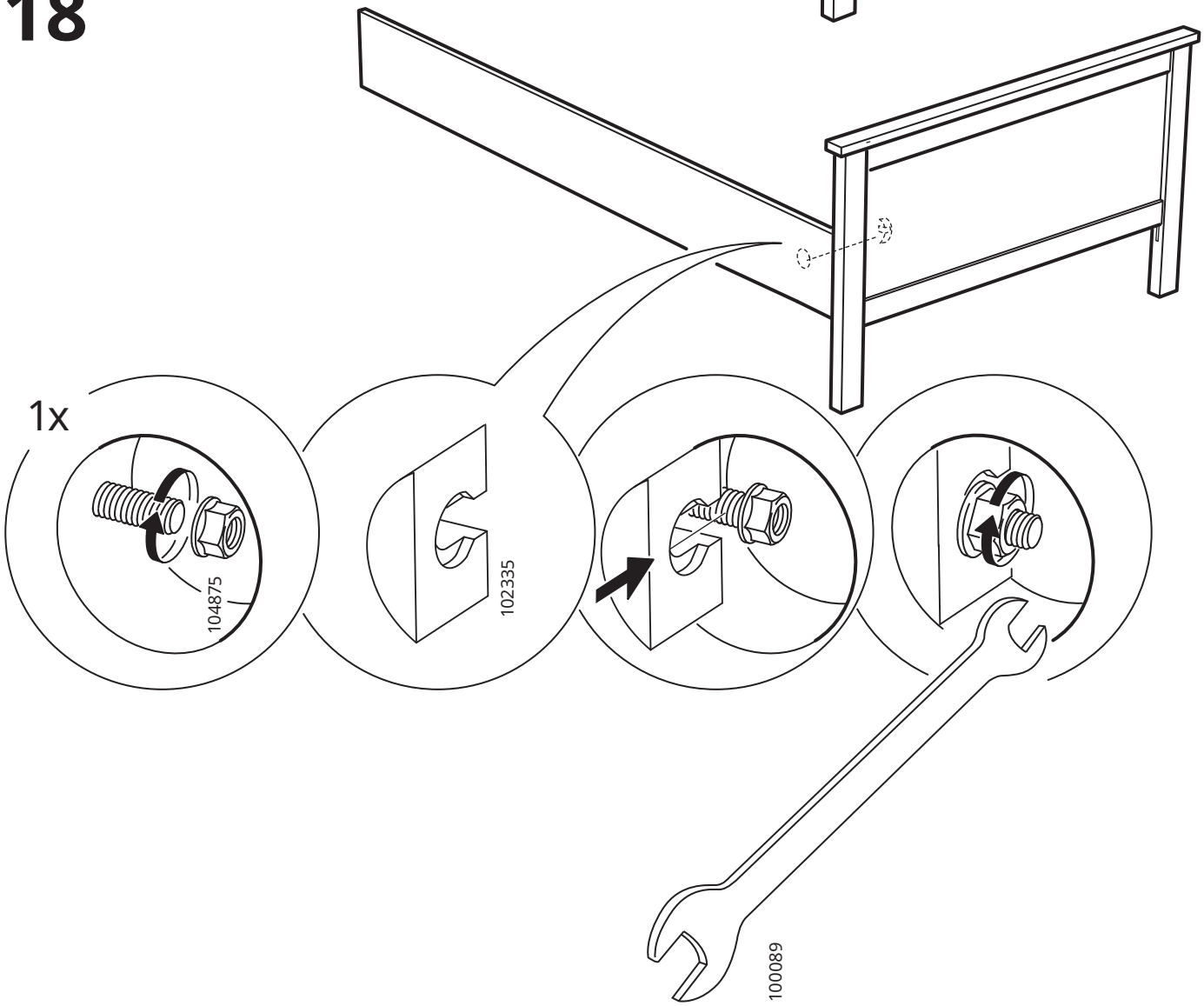

19

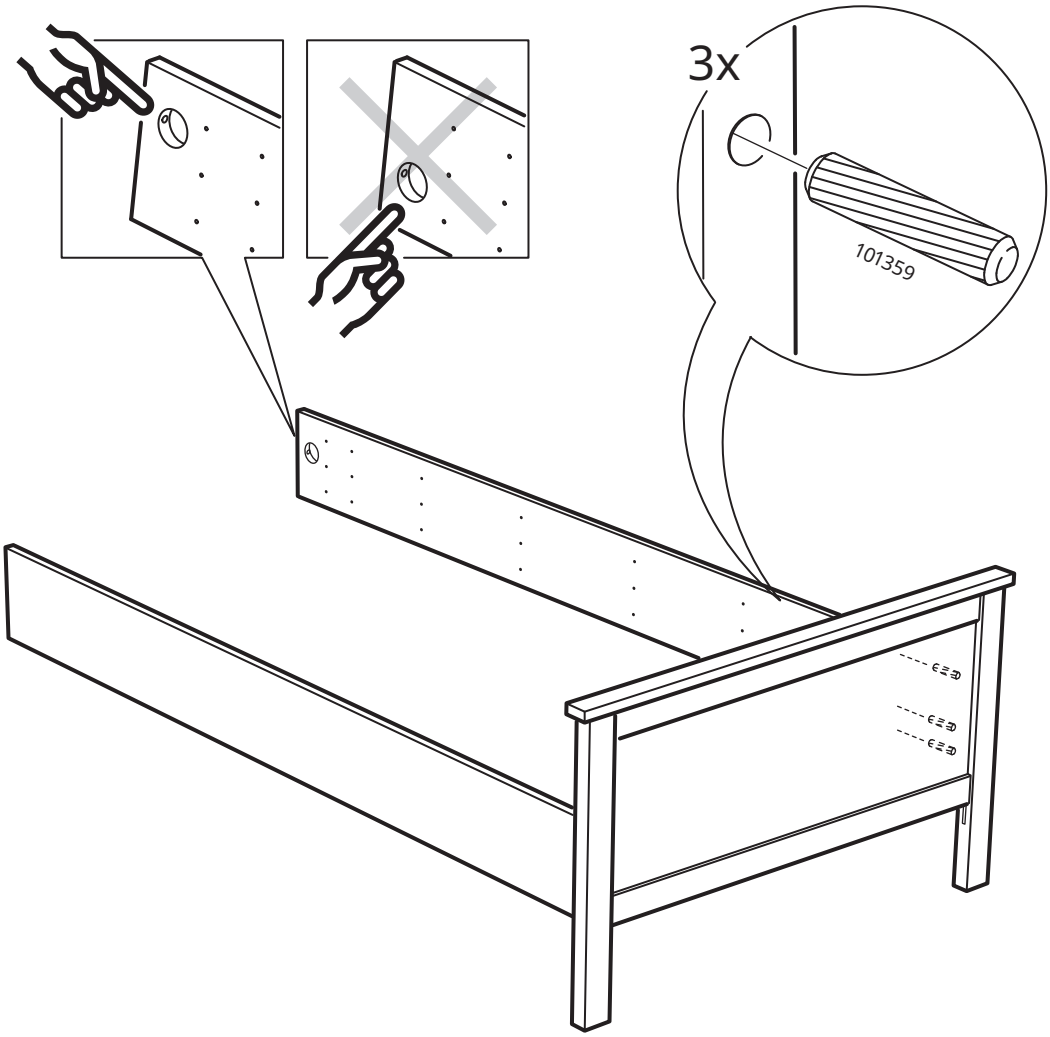

20

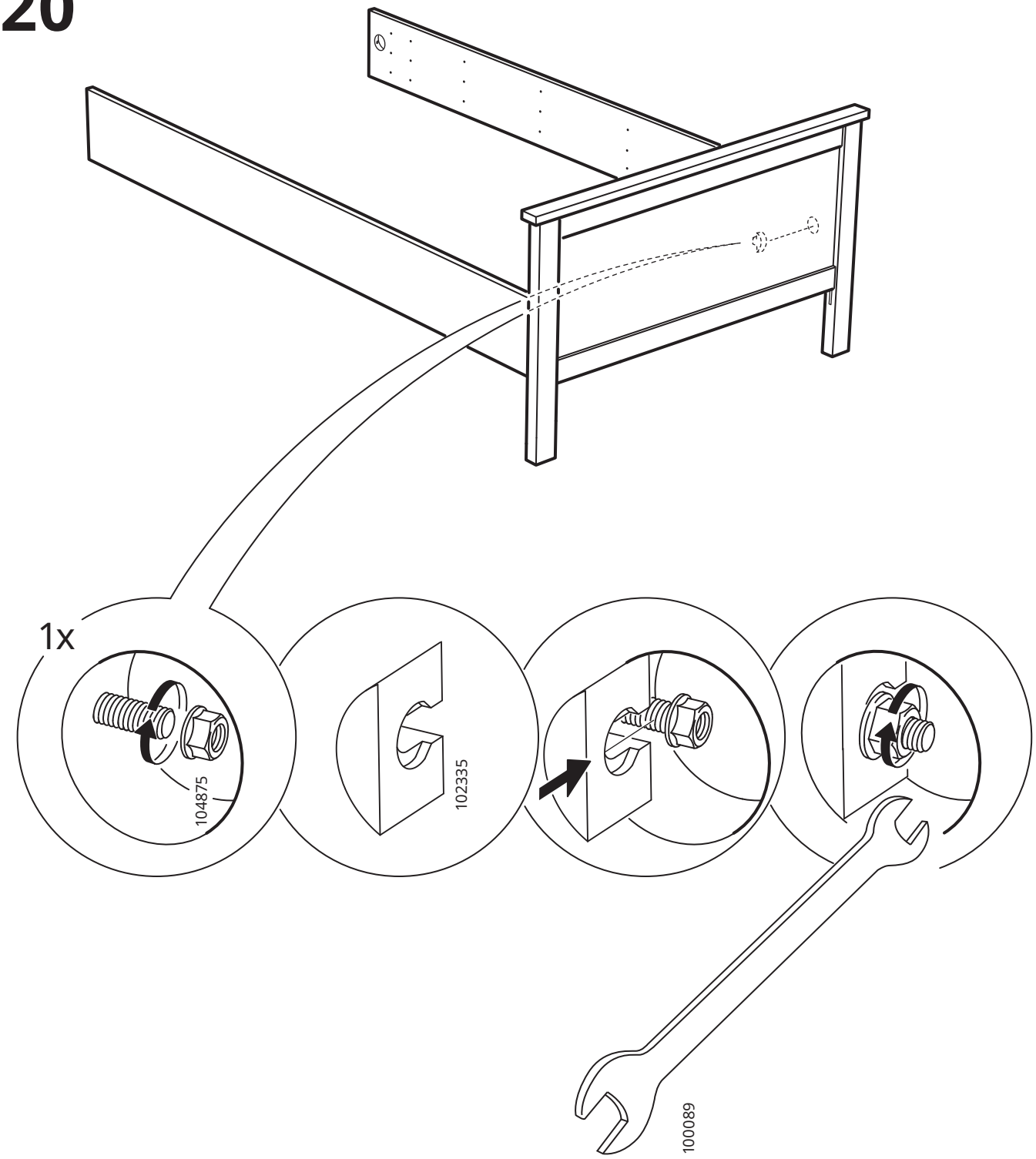

21

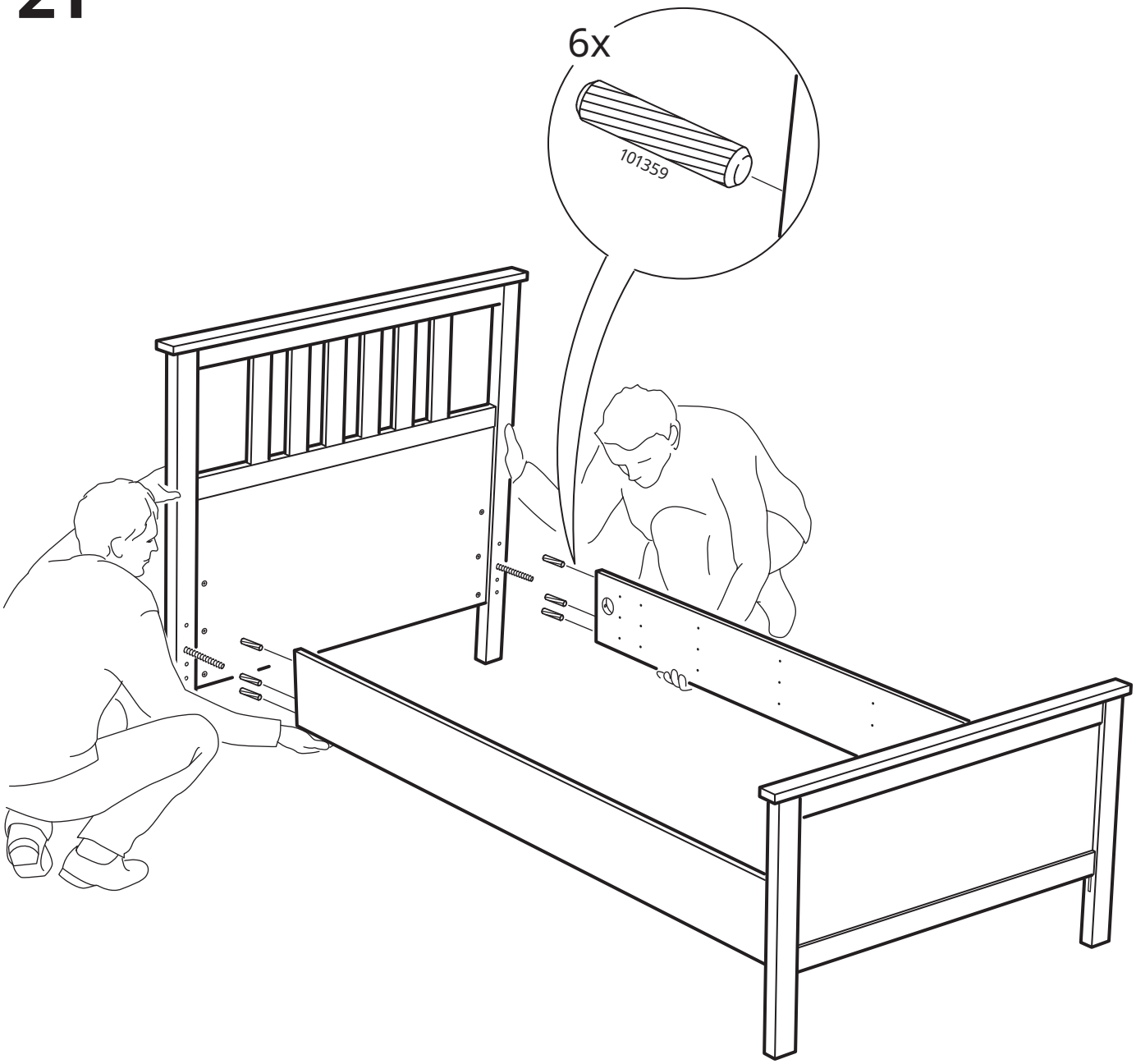

22

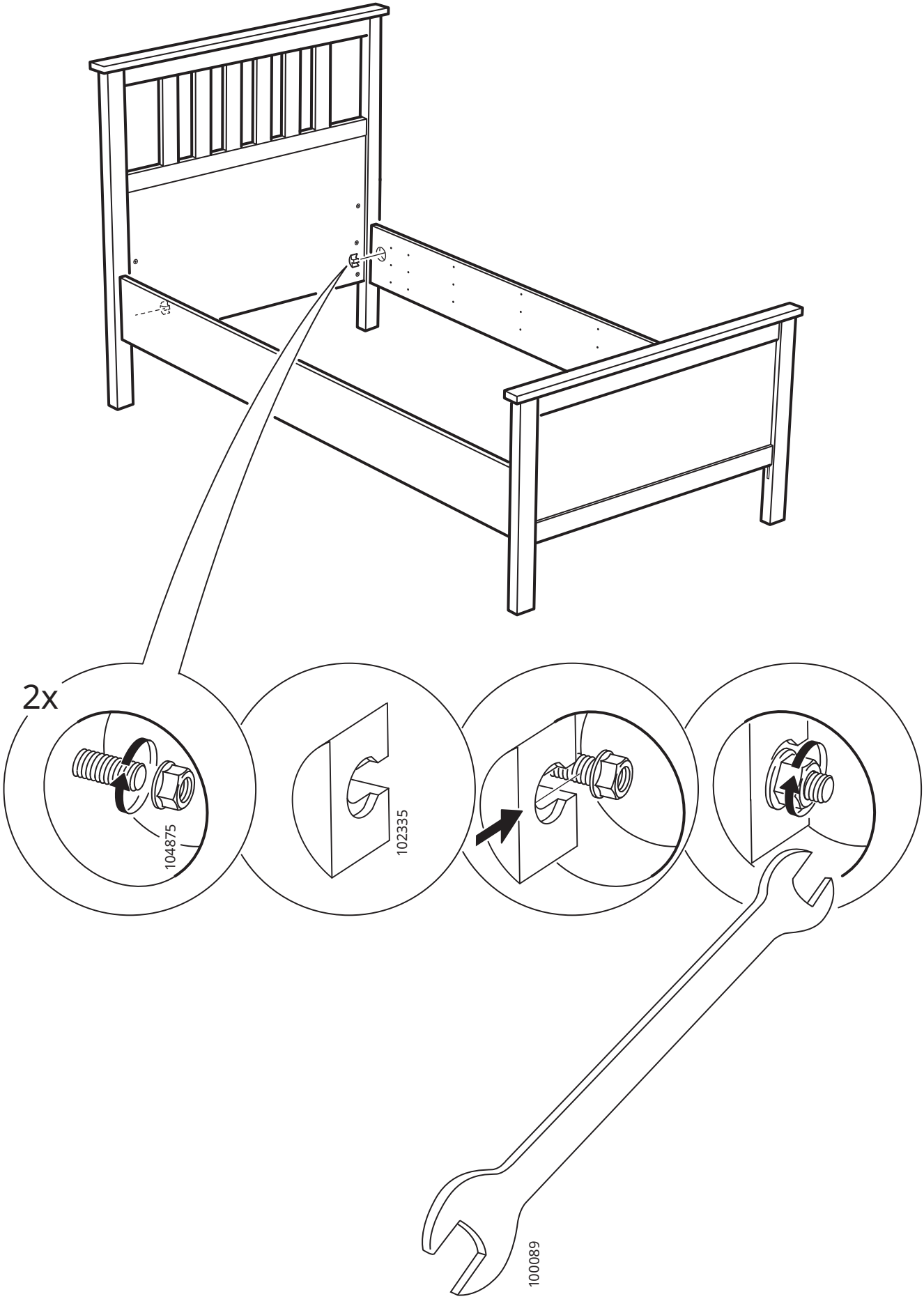

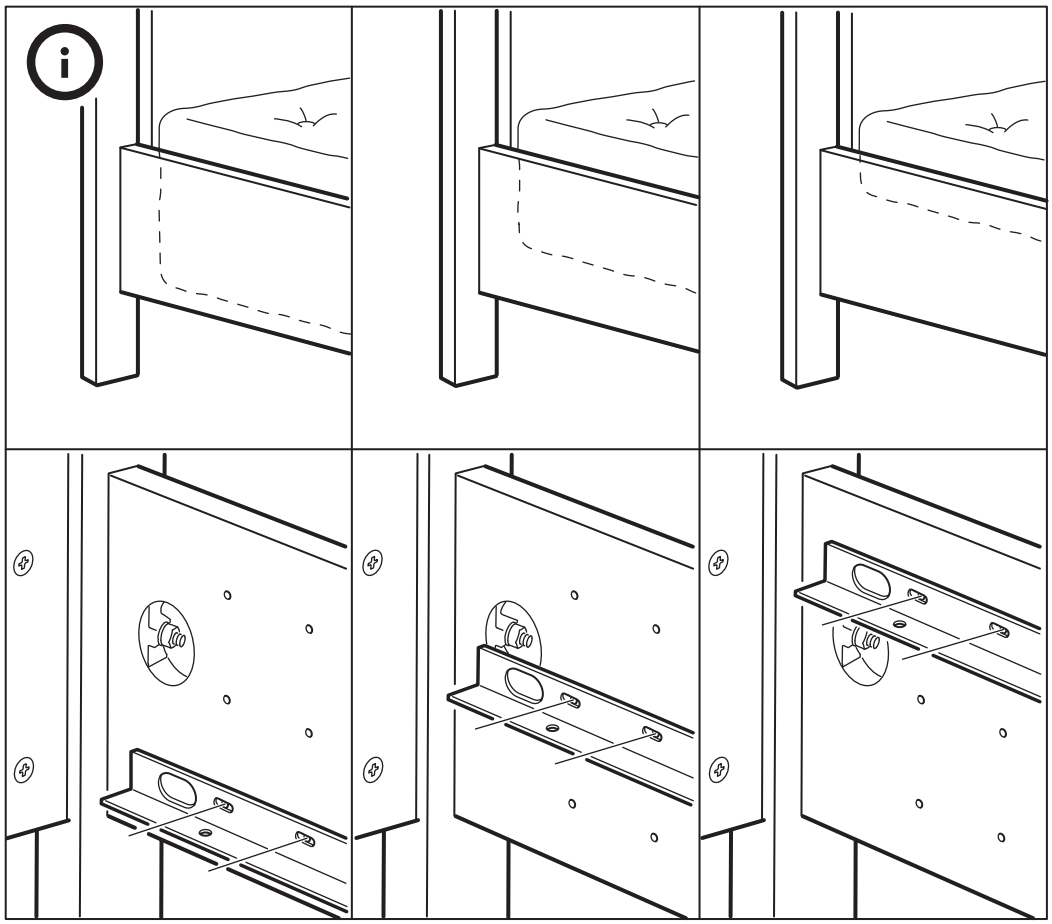

23

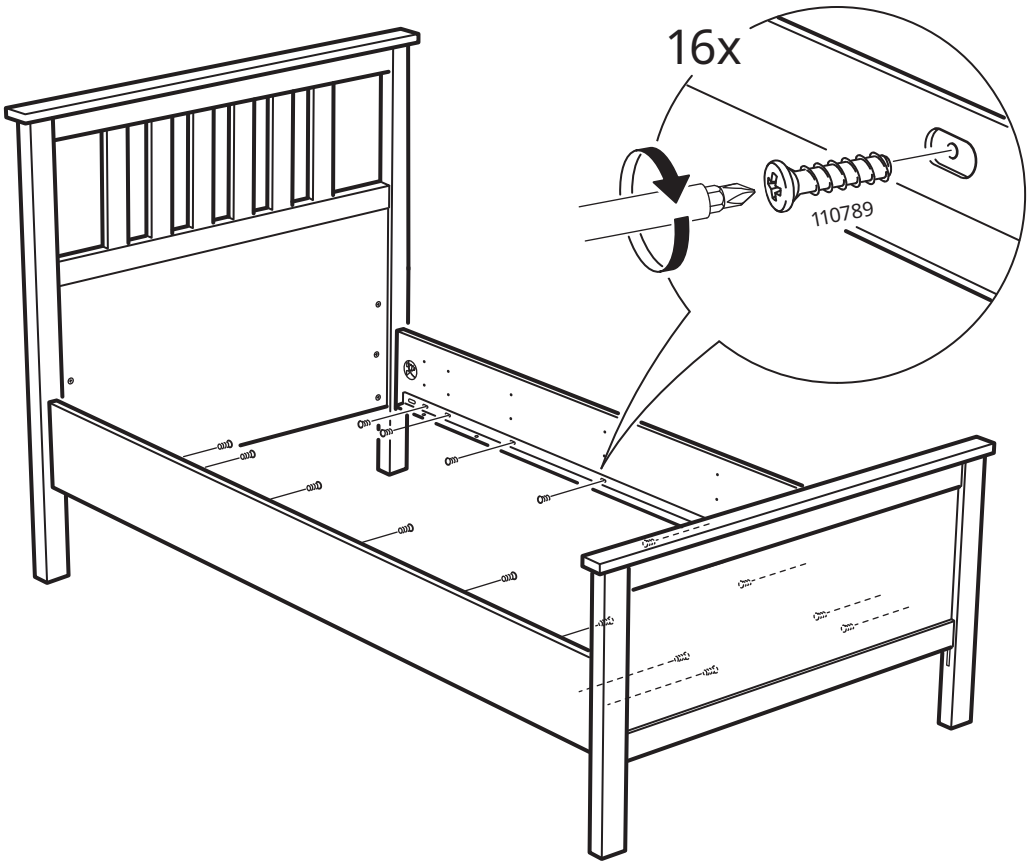

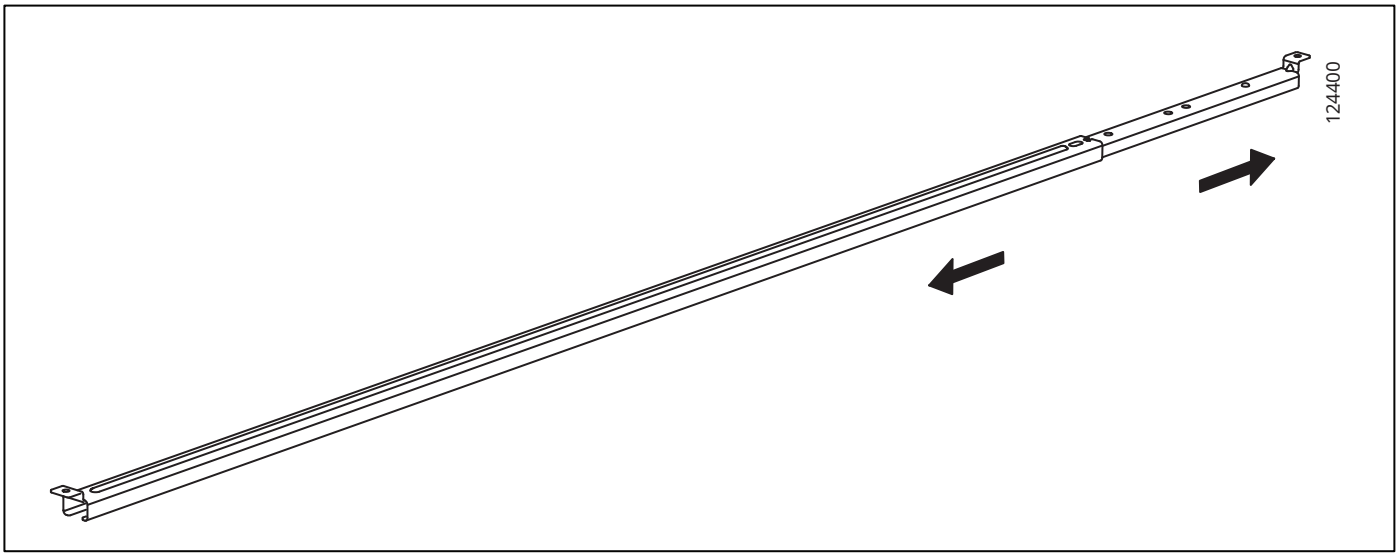

24

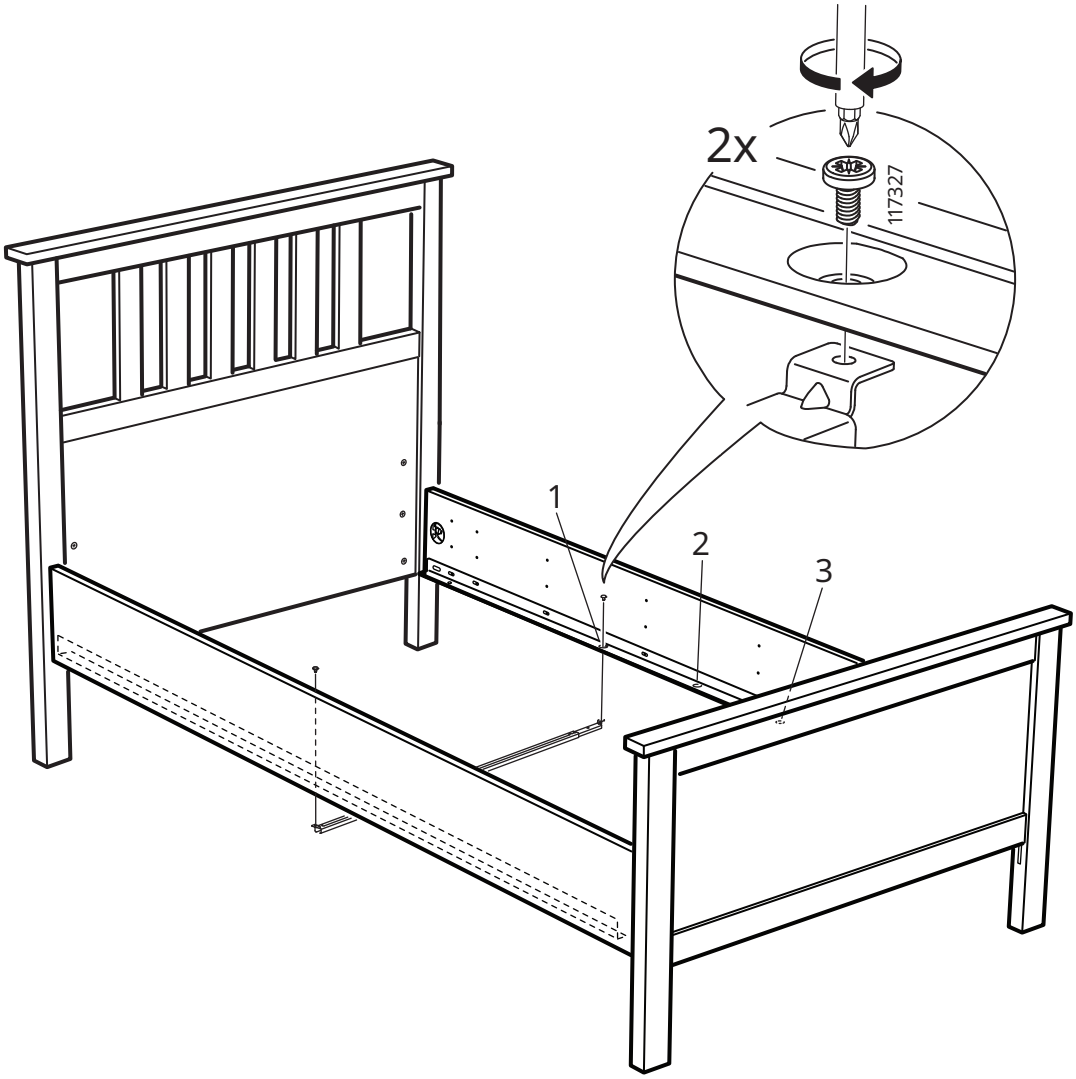

25

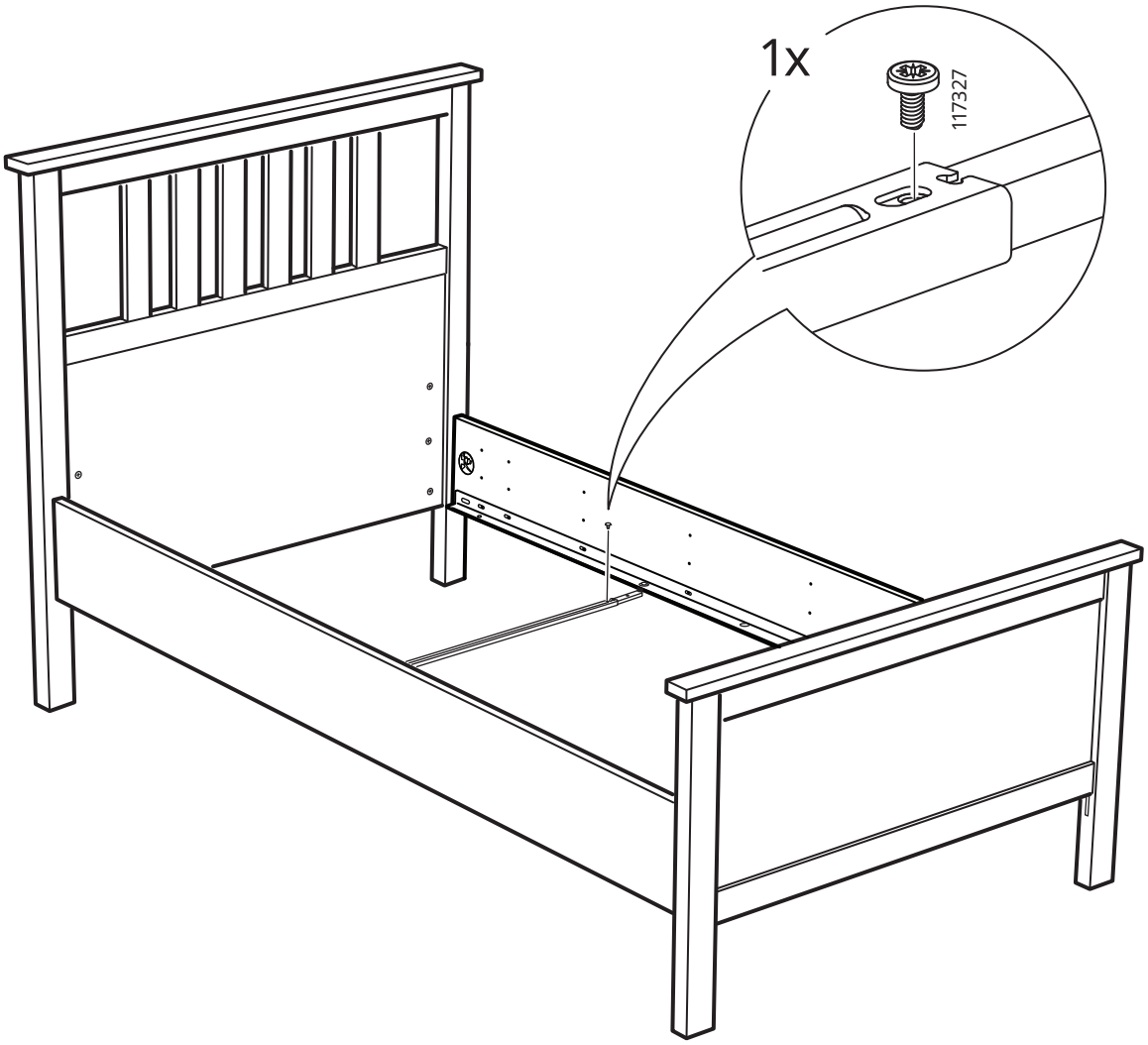

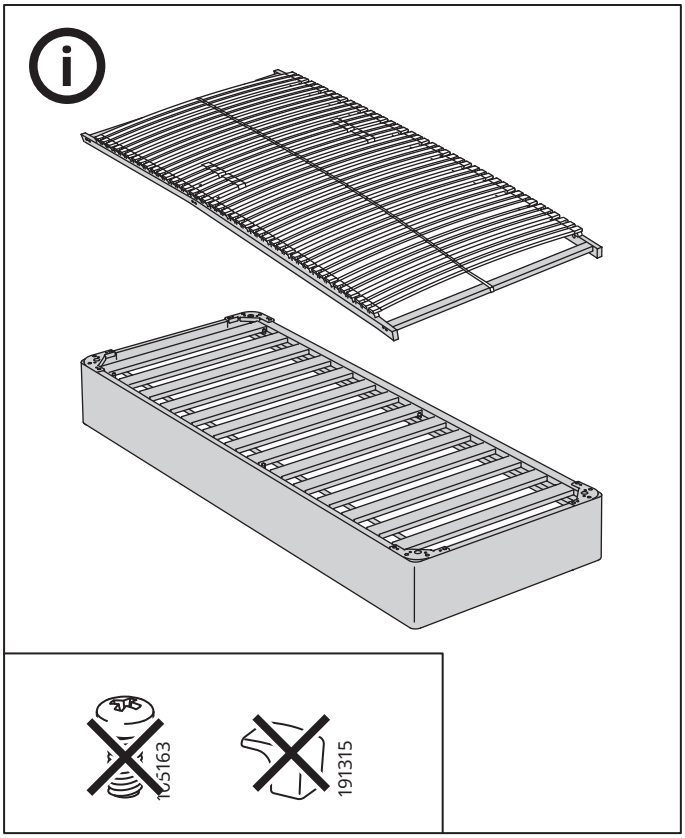

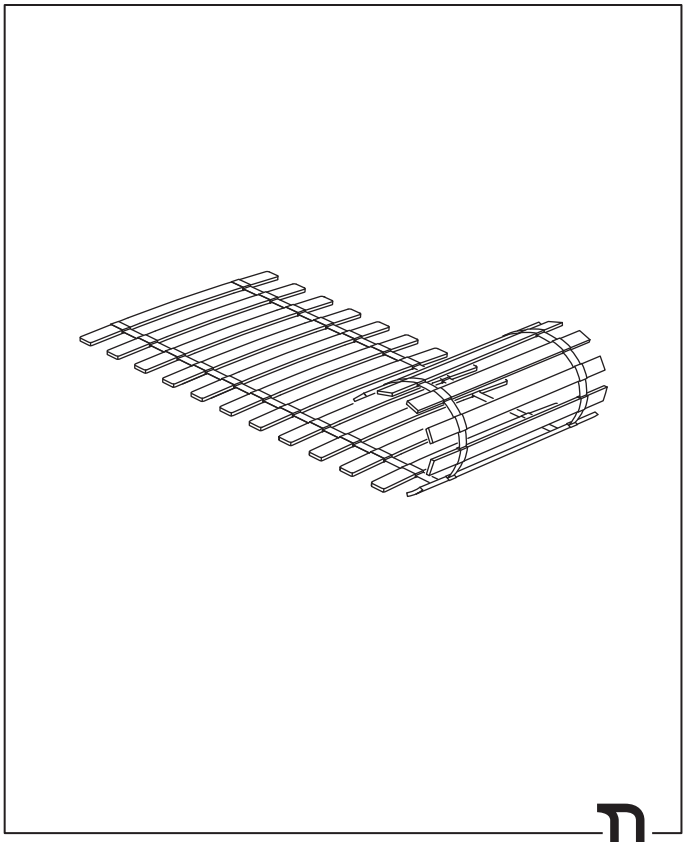

26

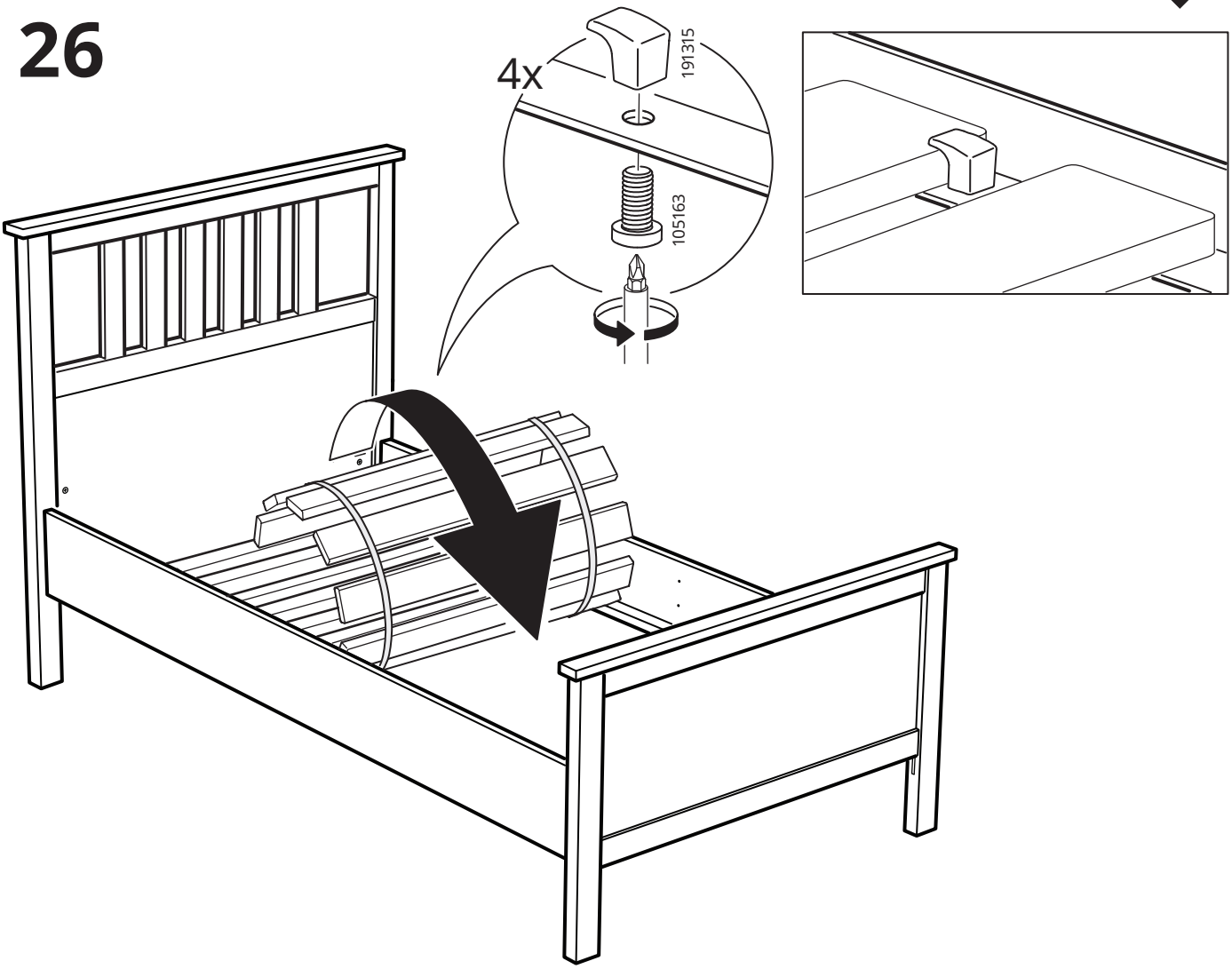

© Inter IKEA Systems B.V. 2016
2022-09-07 AA-1892485-5