SUNDVIK

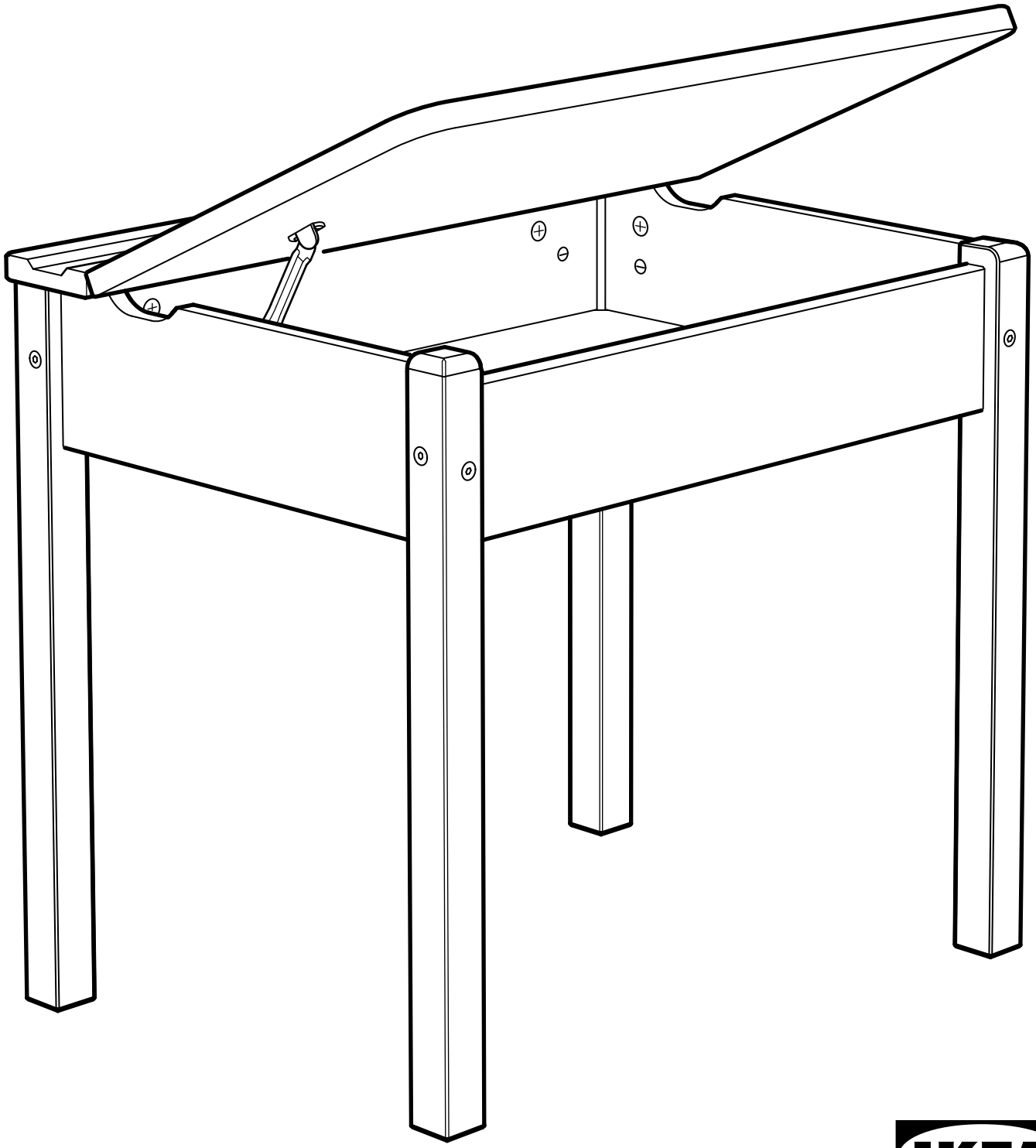

Design and Quality
IKEA of Sweden

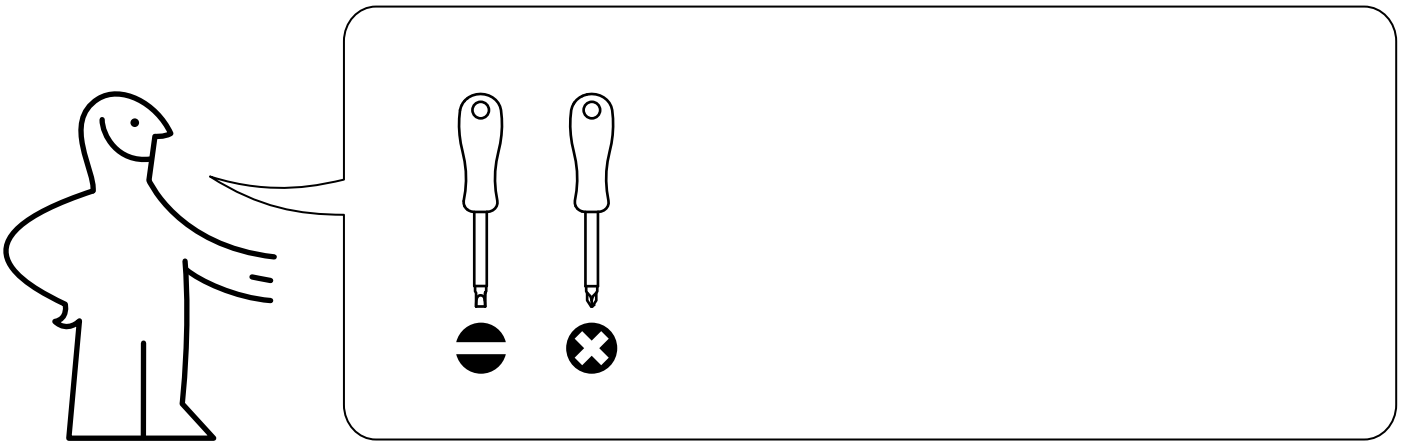

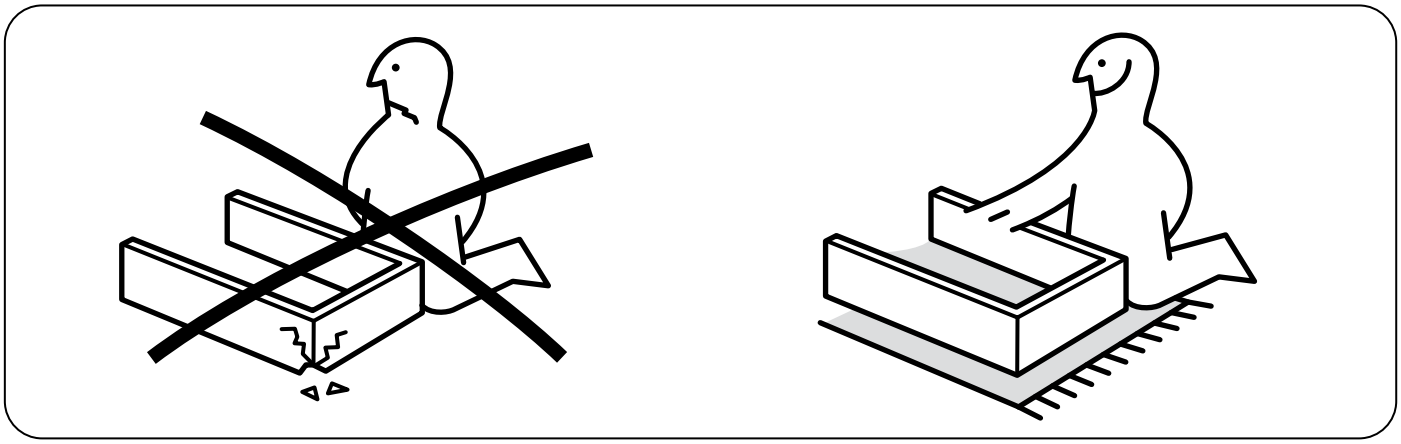

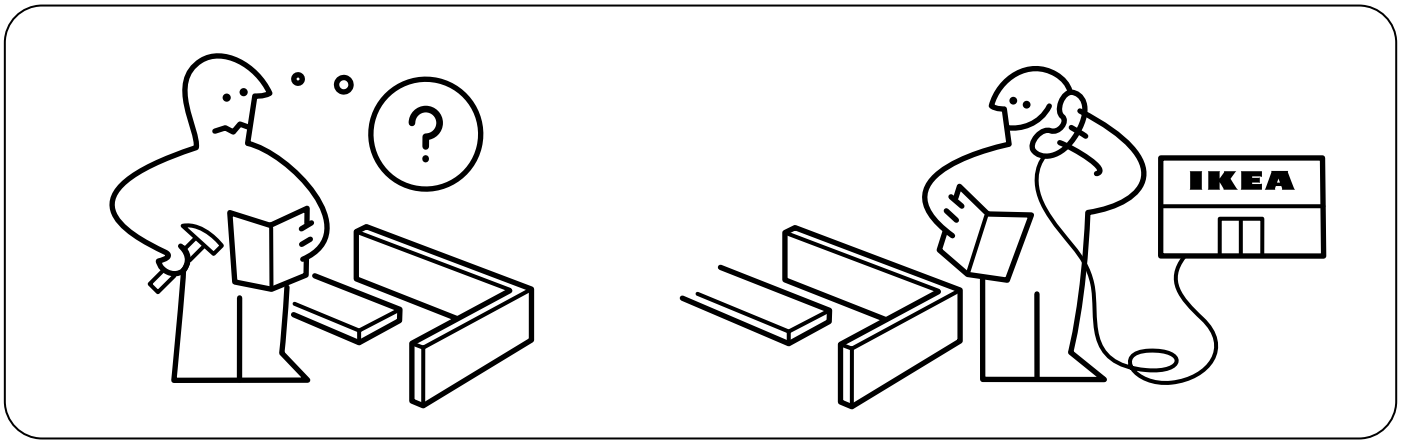
?
IKEA

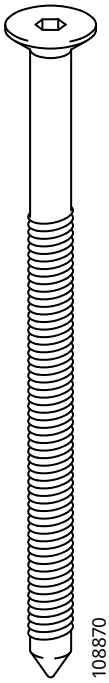

8x

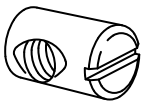

8x

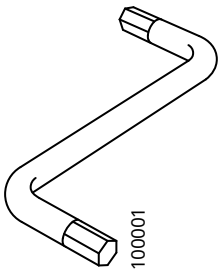

1x

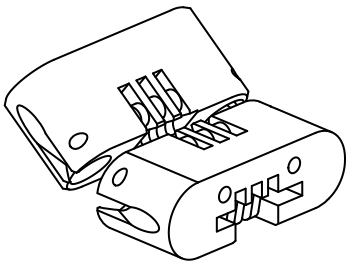

2x

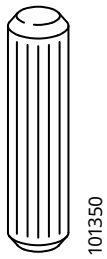

20x

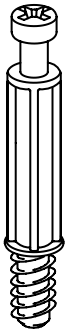

4x

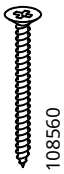

8x

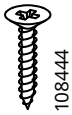

2x

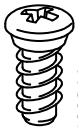

2x

4x

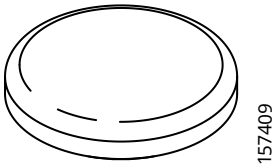

4x

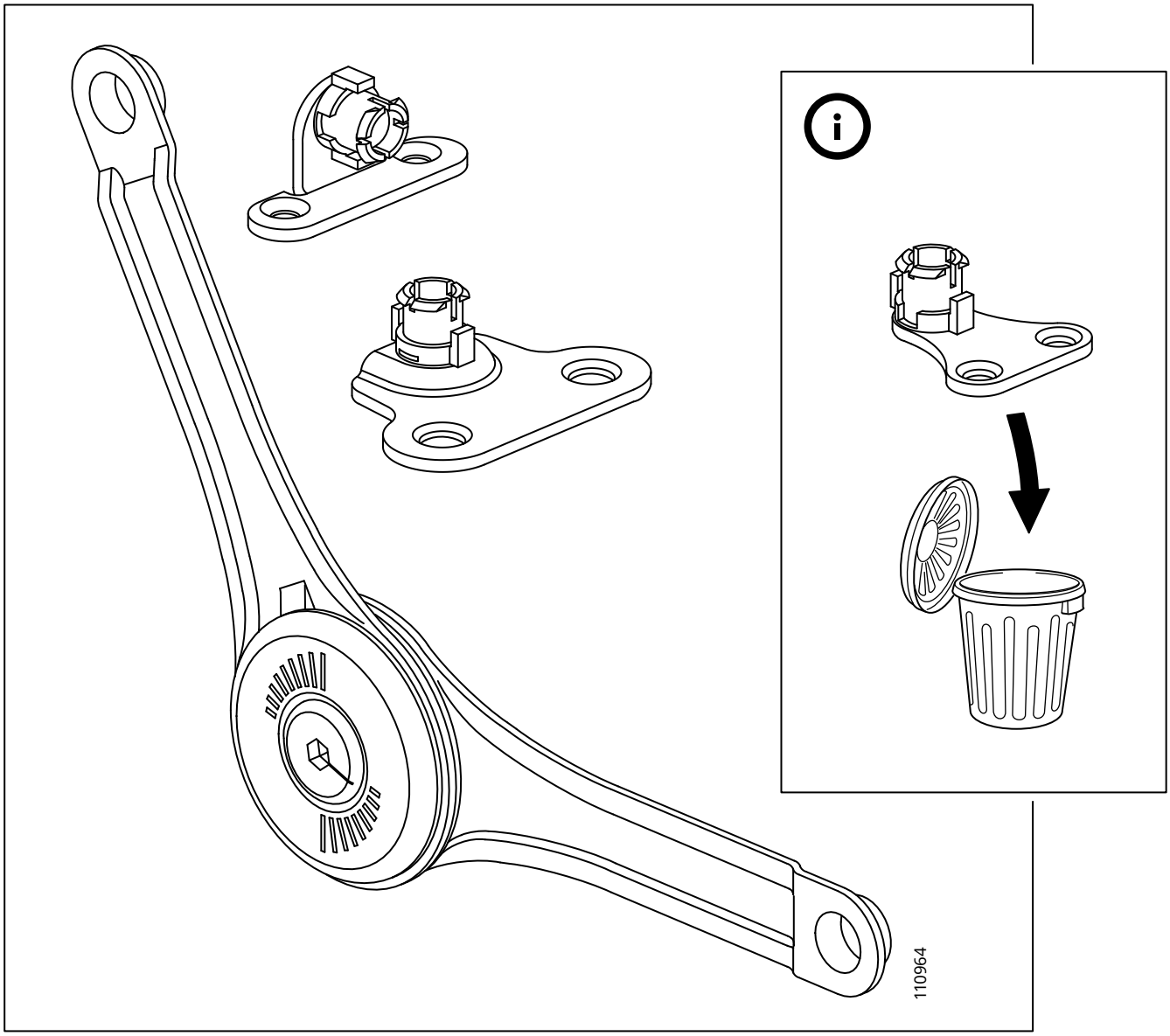

1

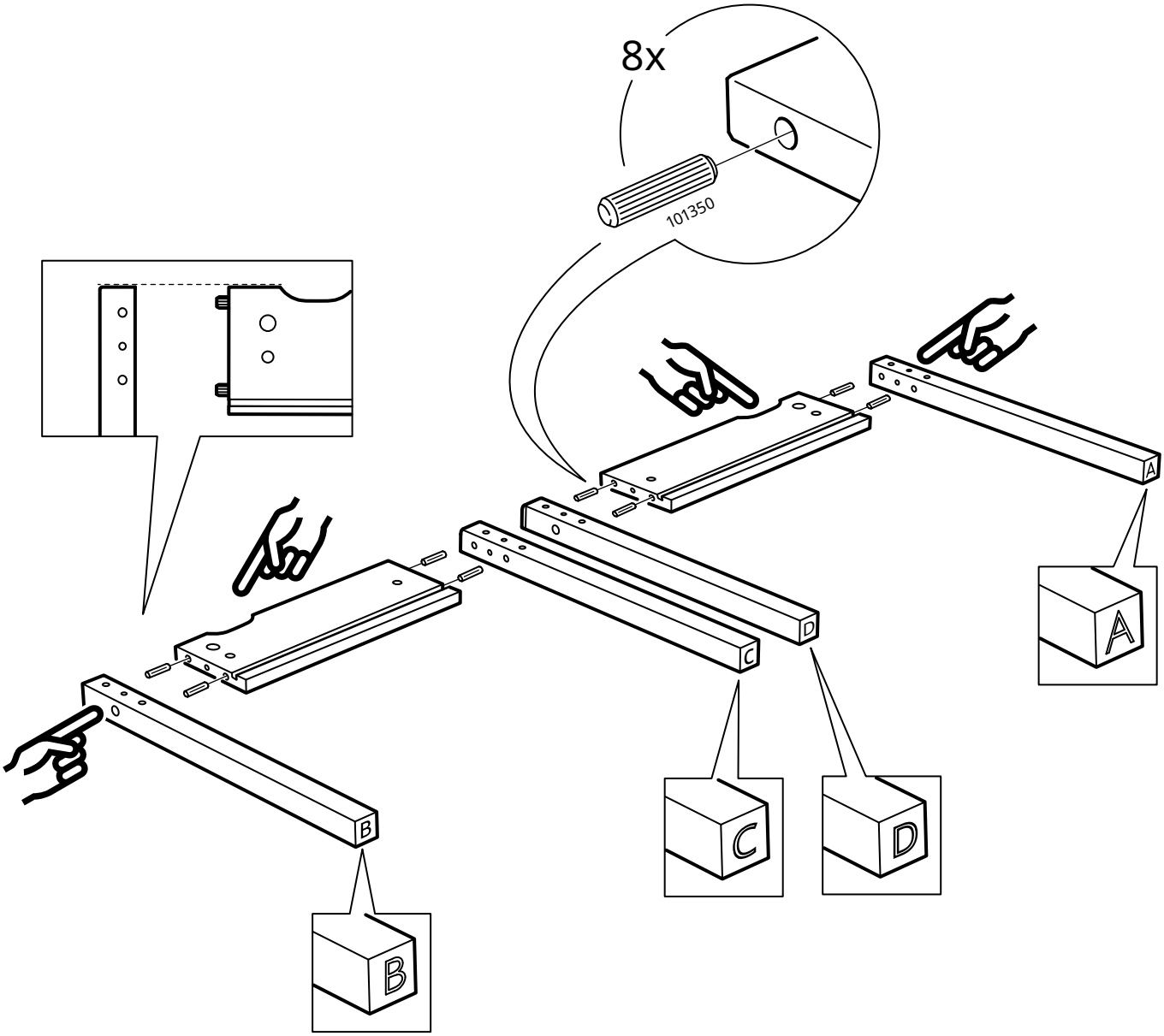

2

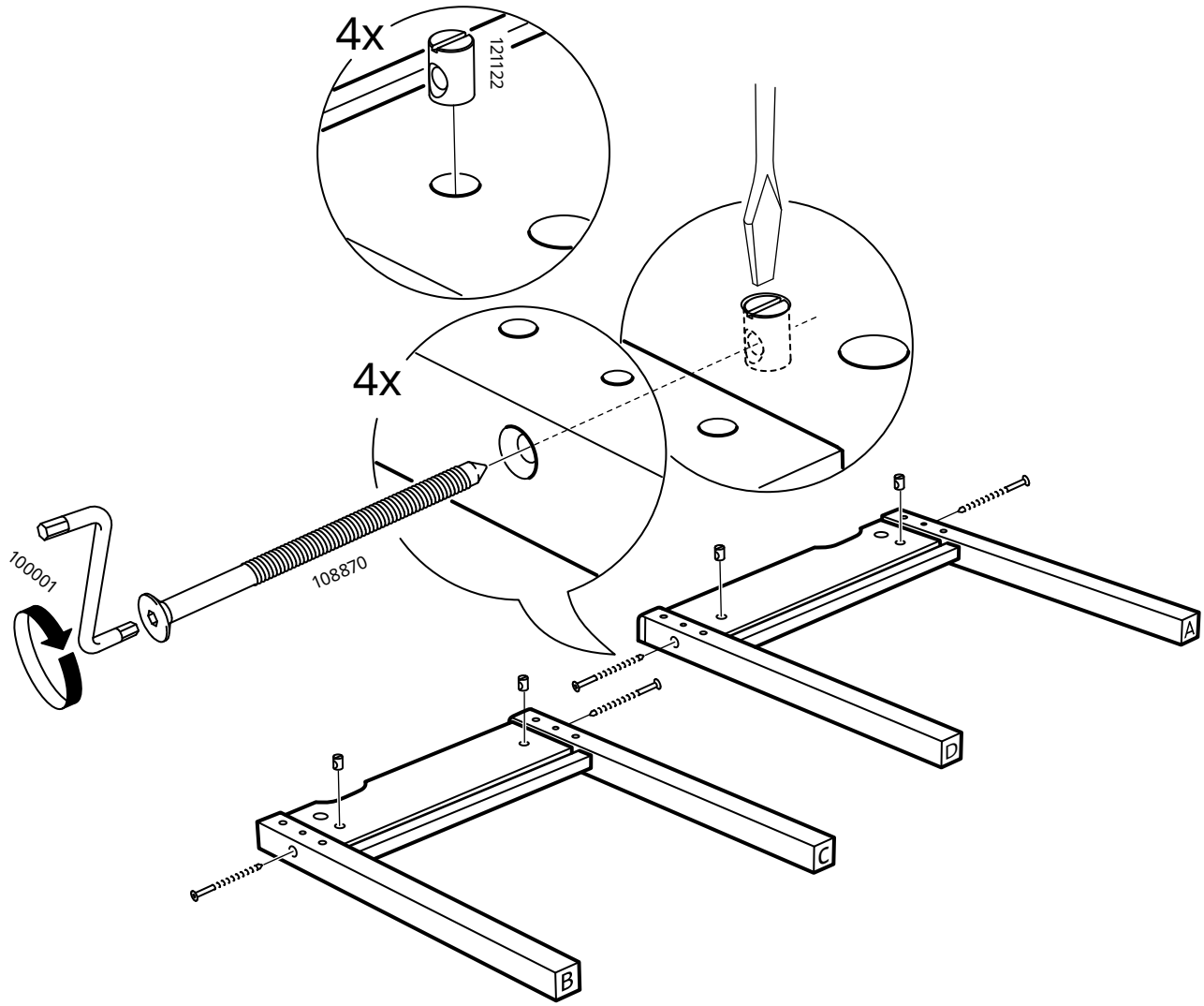

3

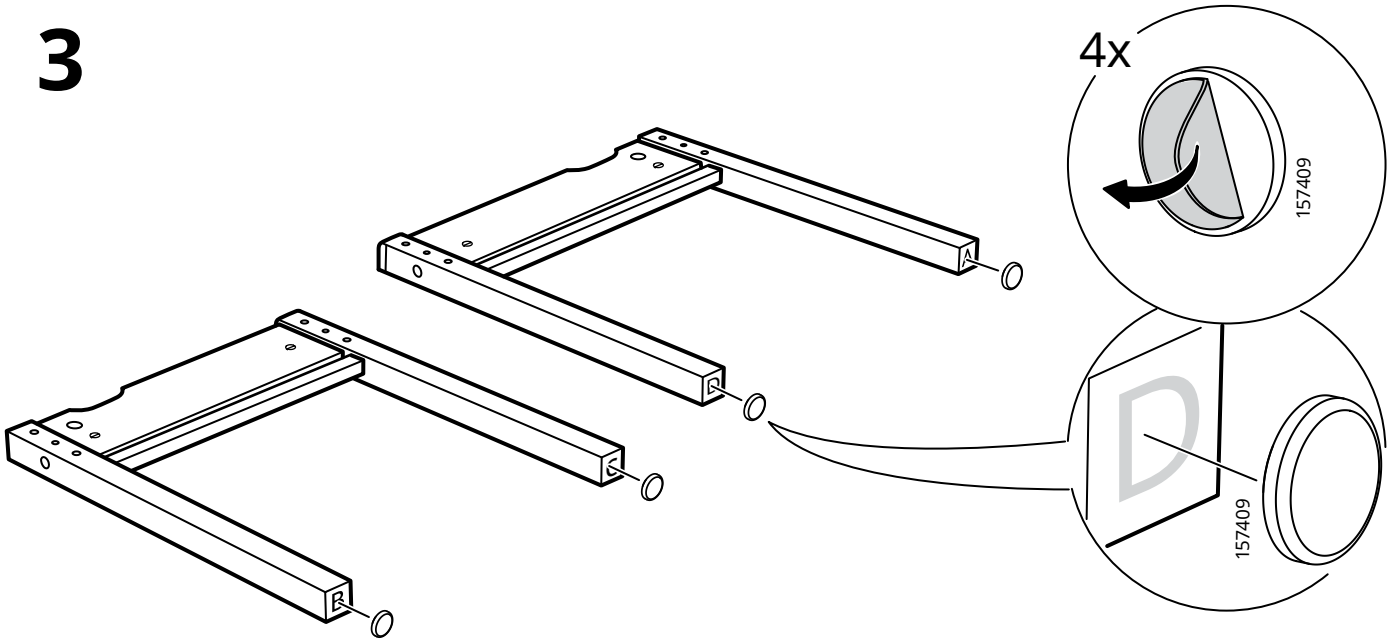

4

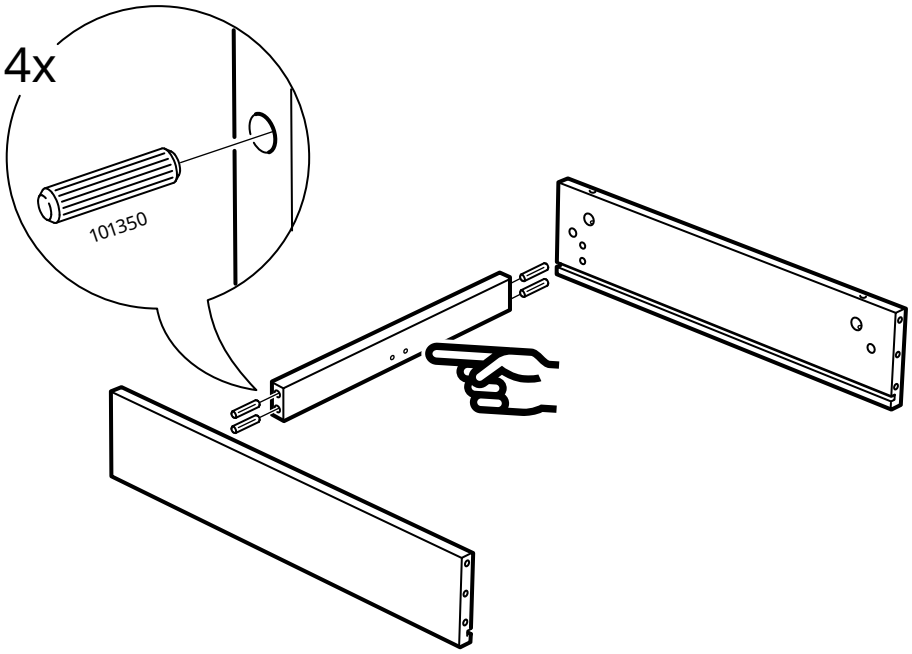

5

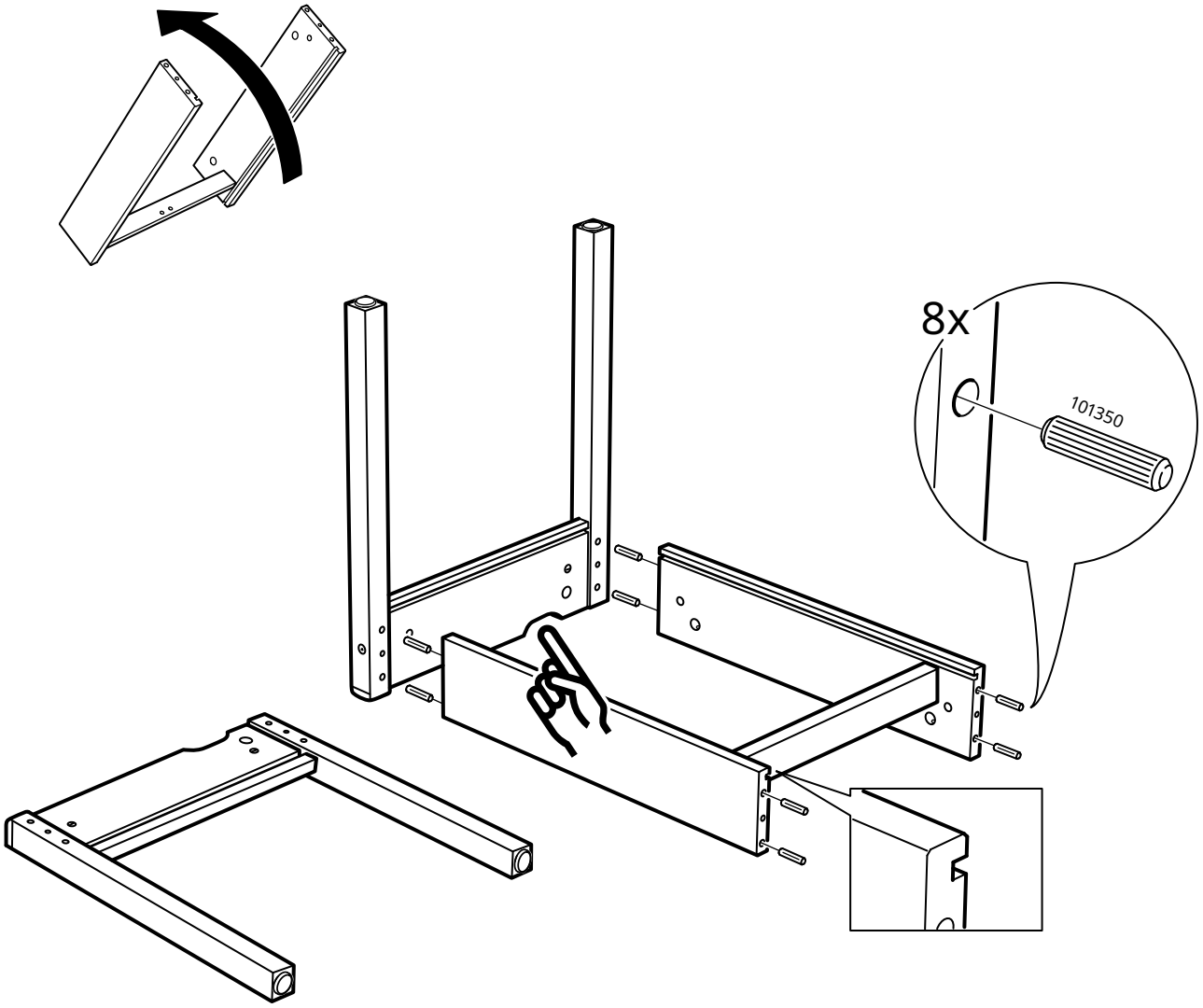

6

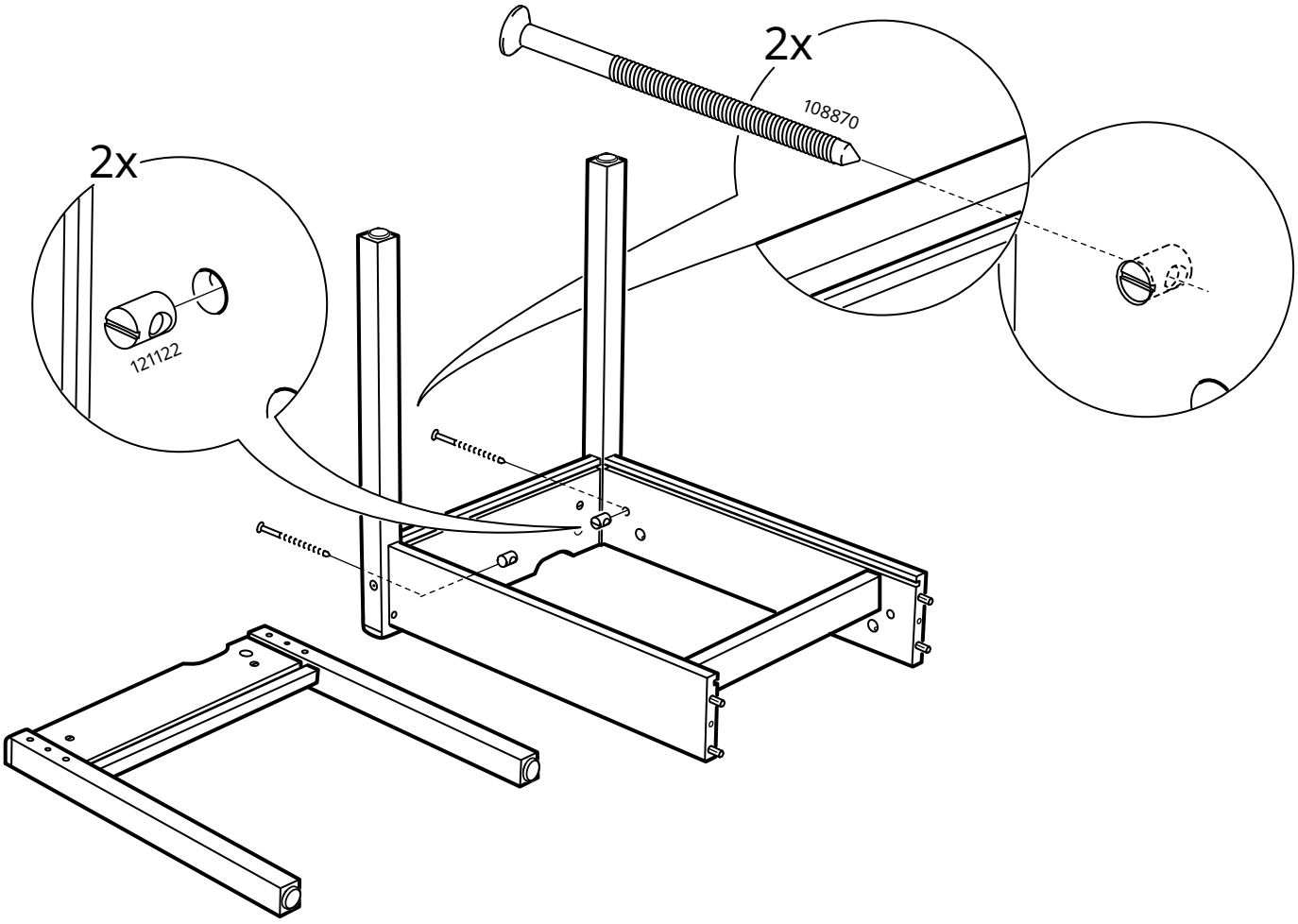

7

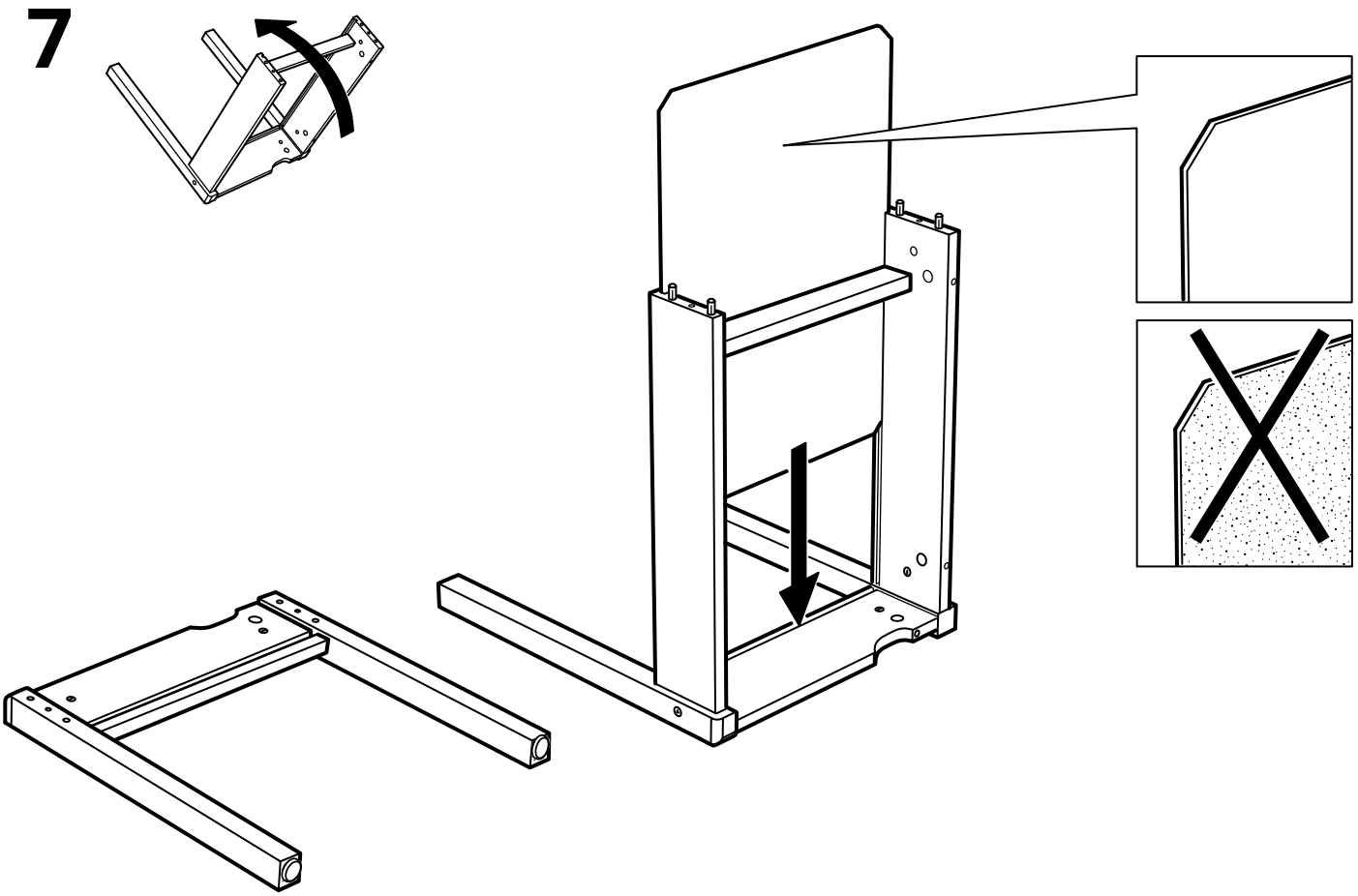

8

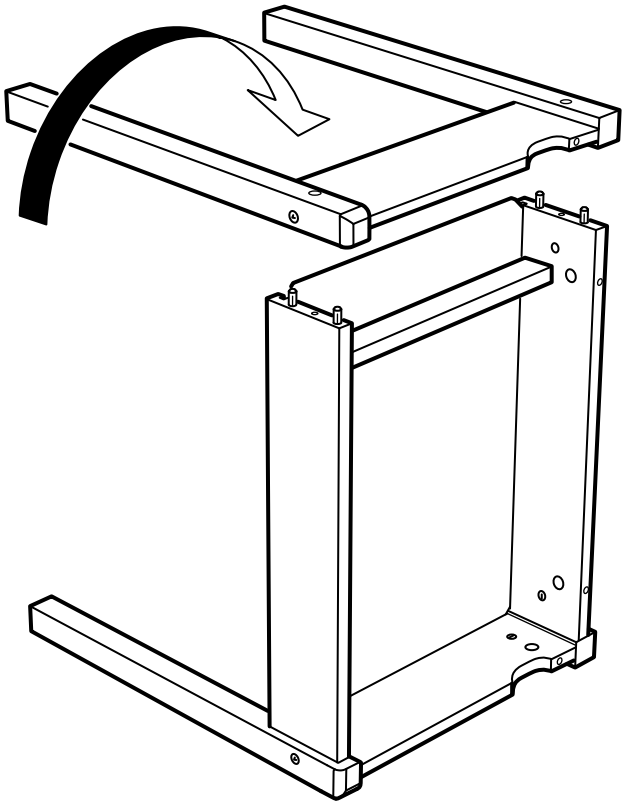

9

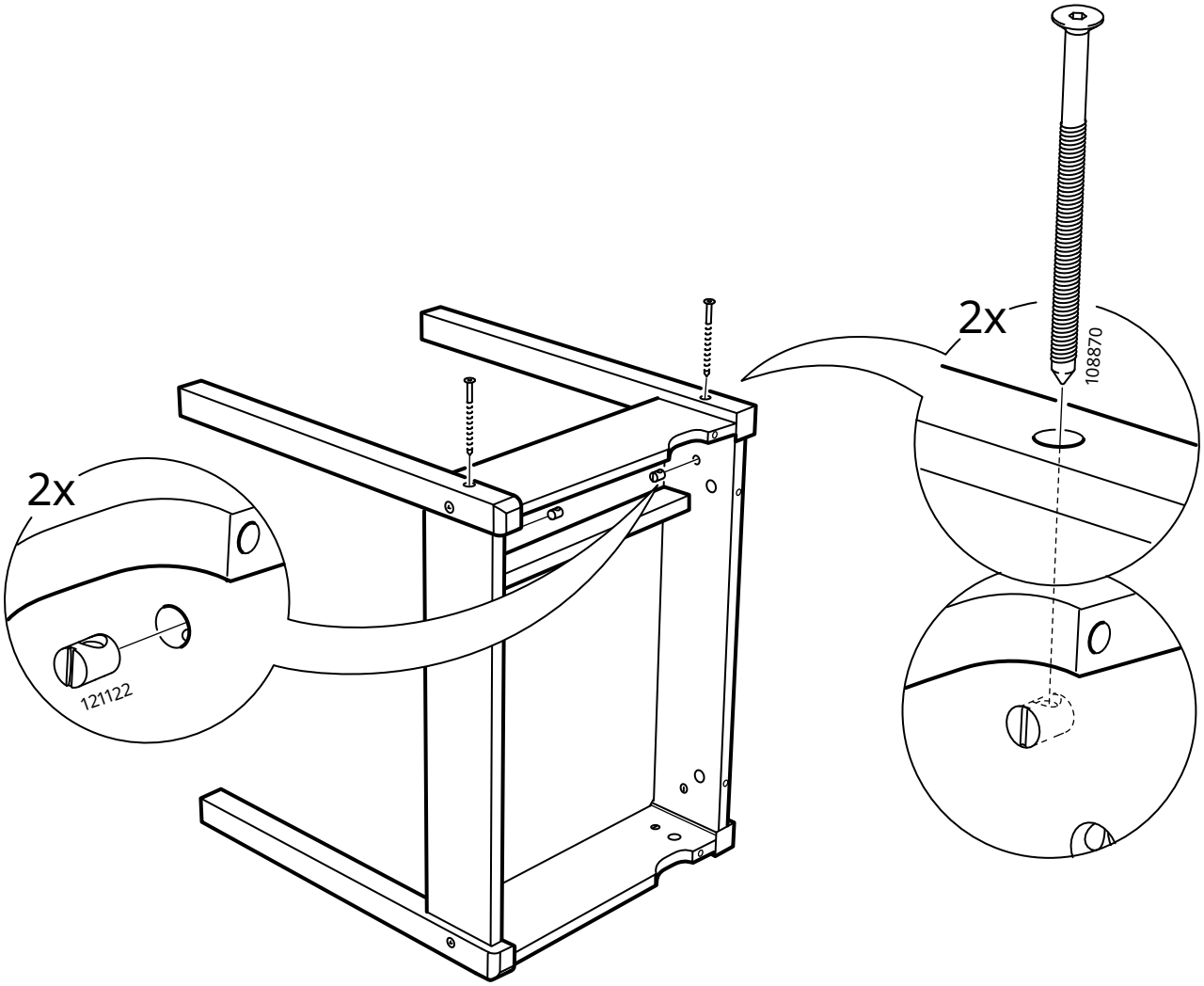

10

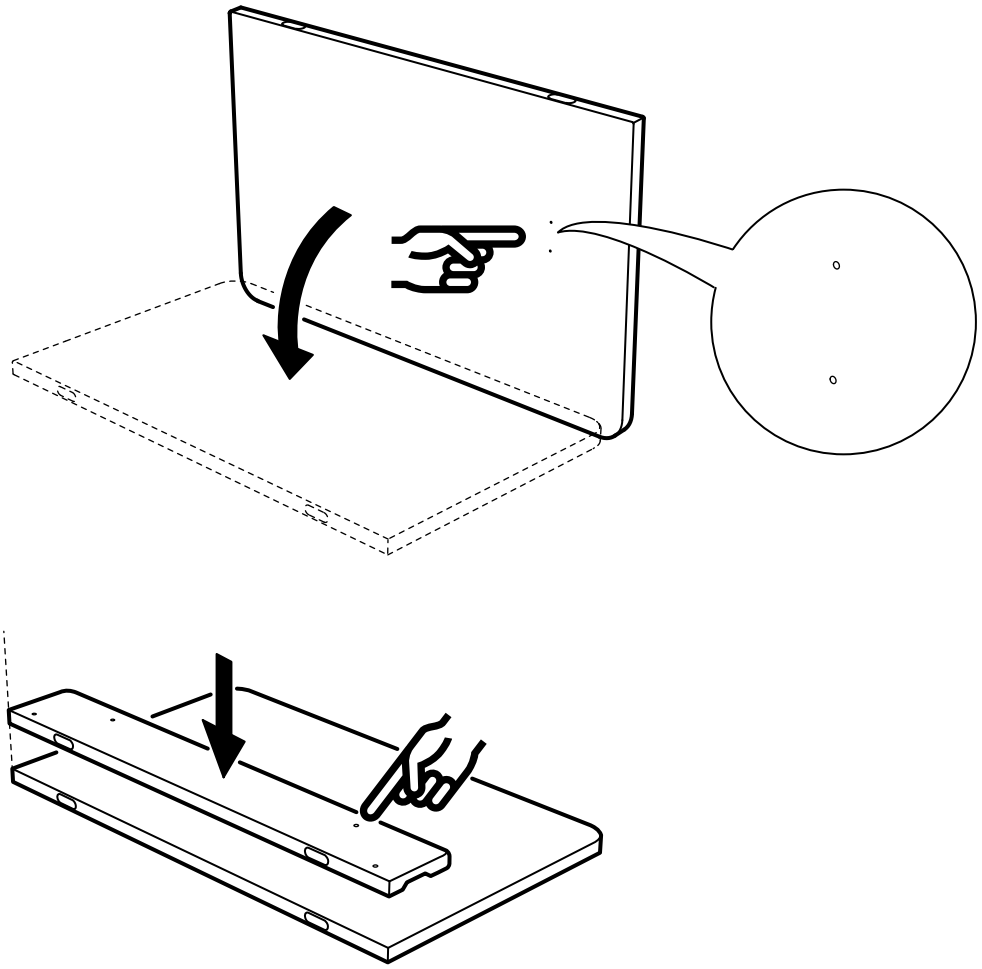

11

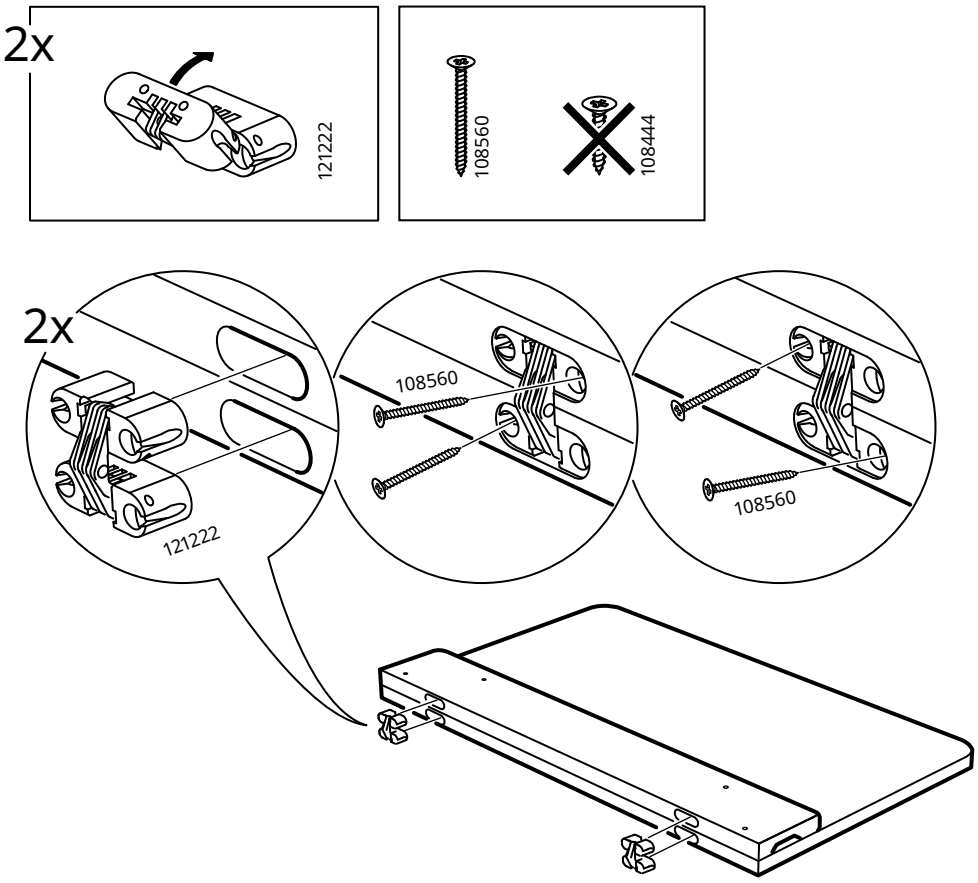

12

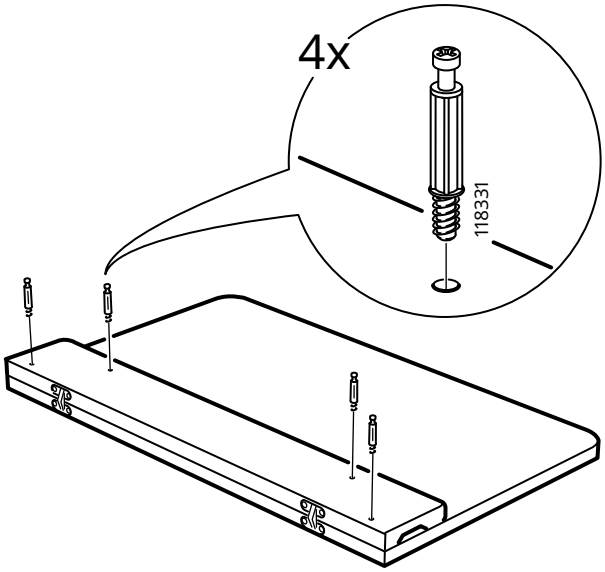

13

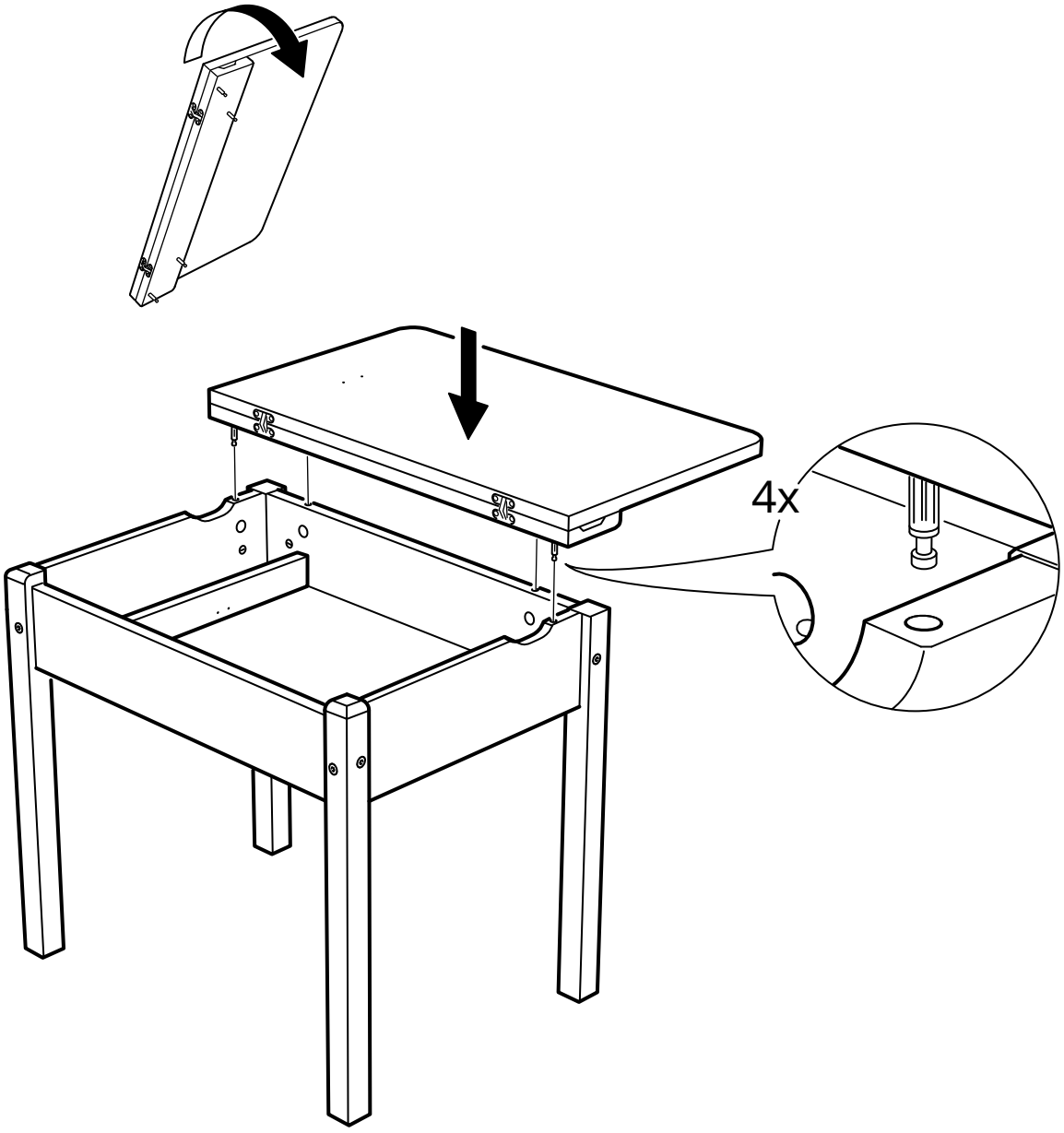

14

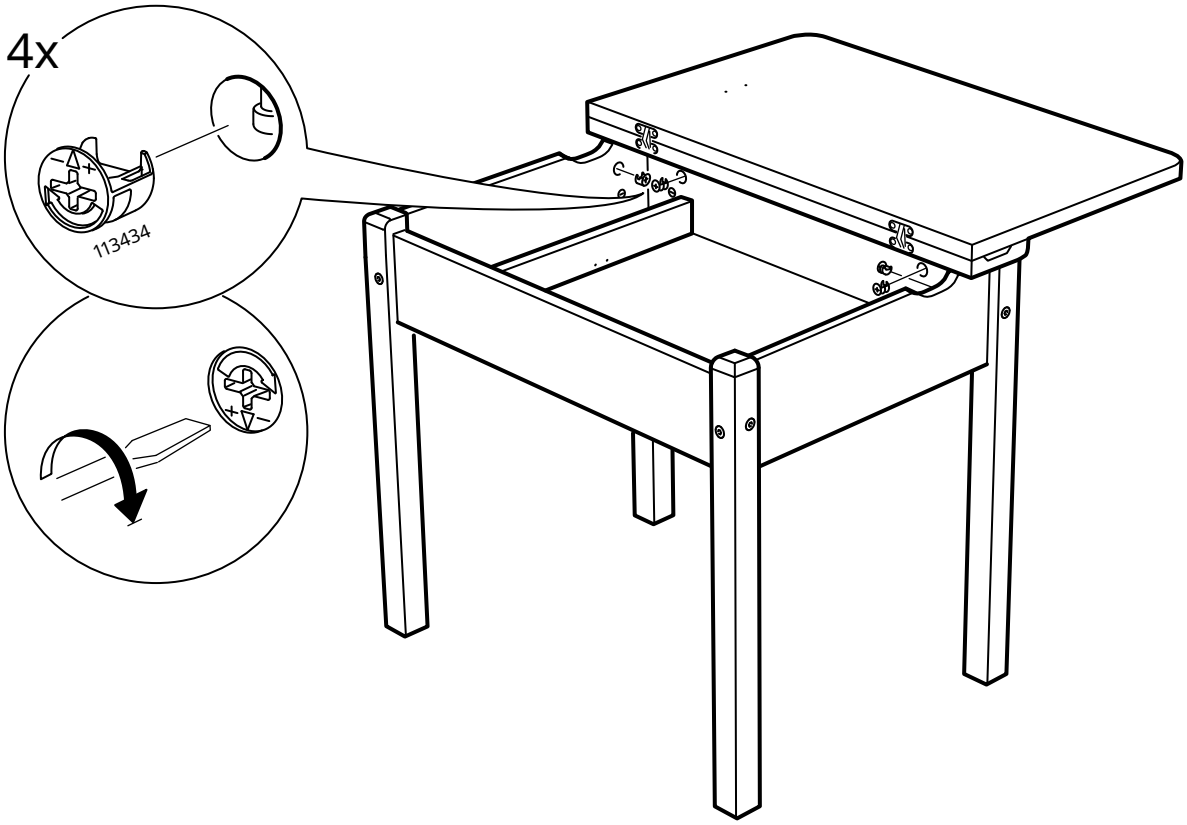

15

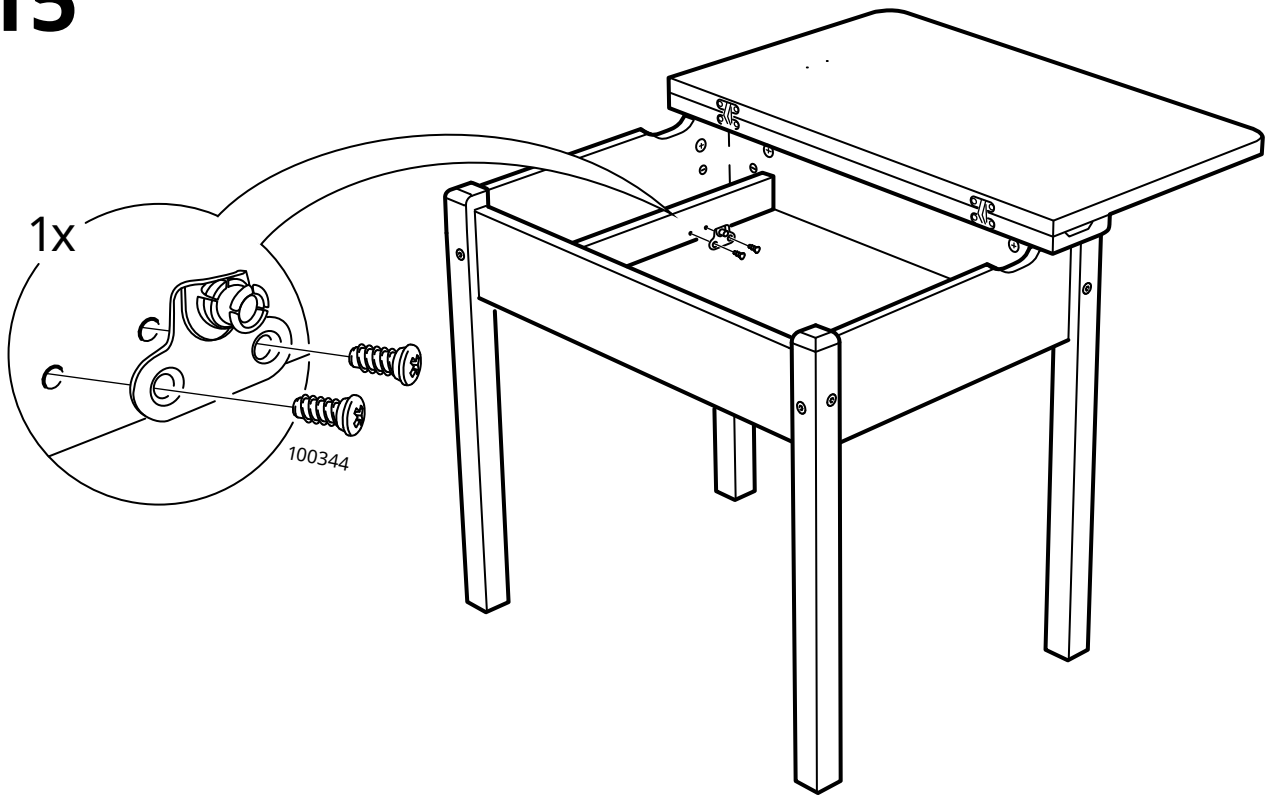

16

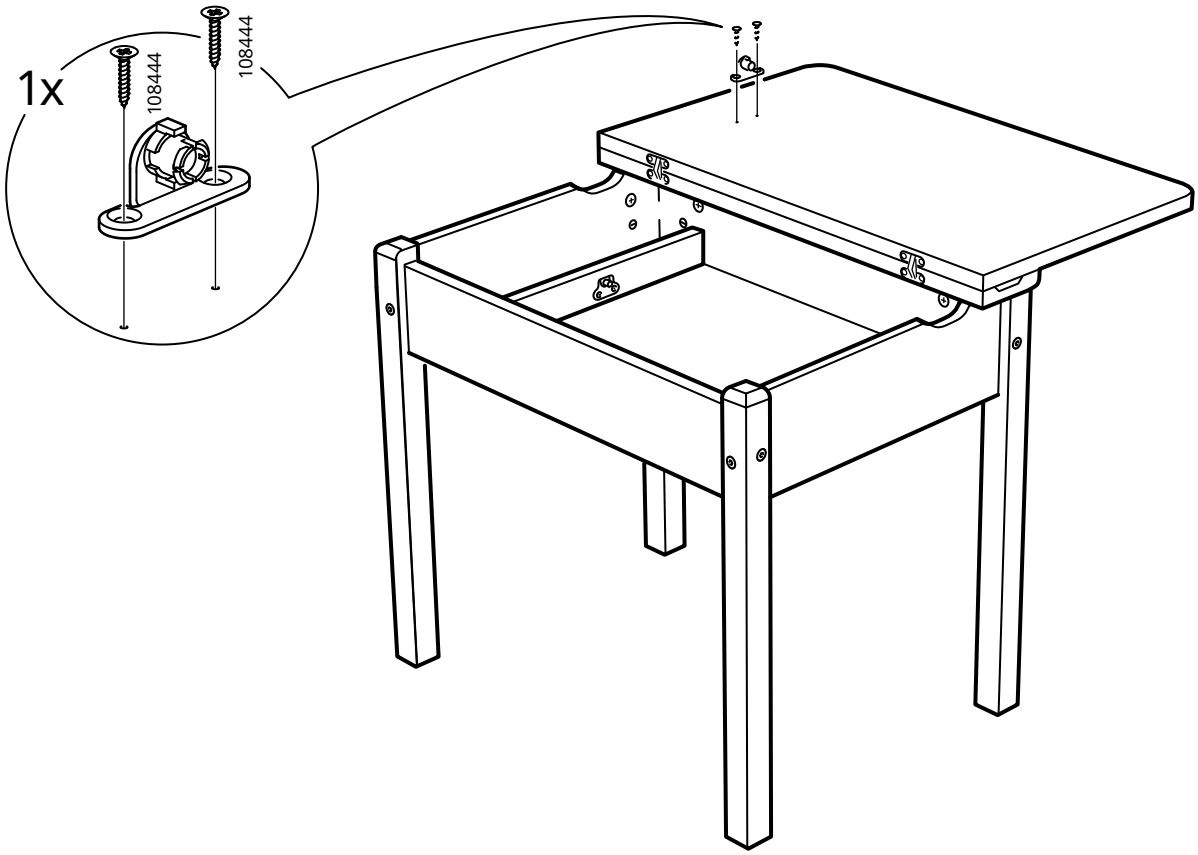

17

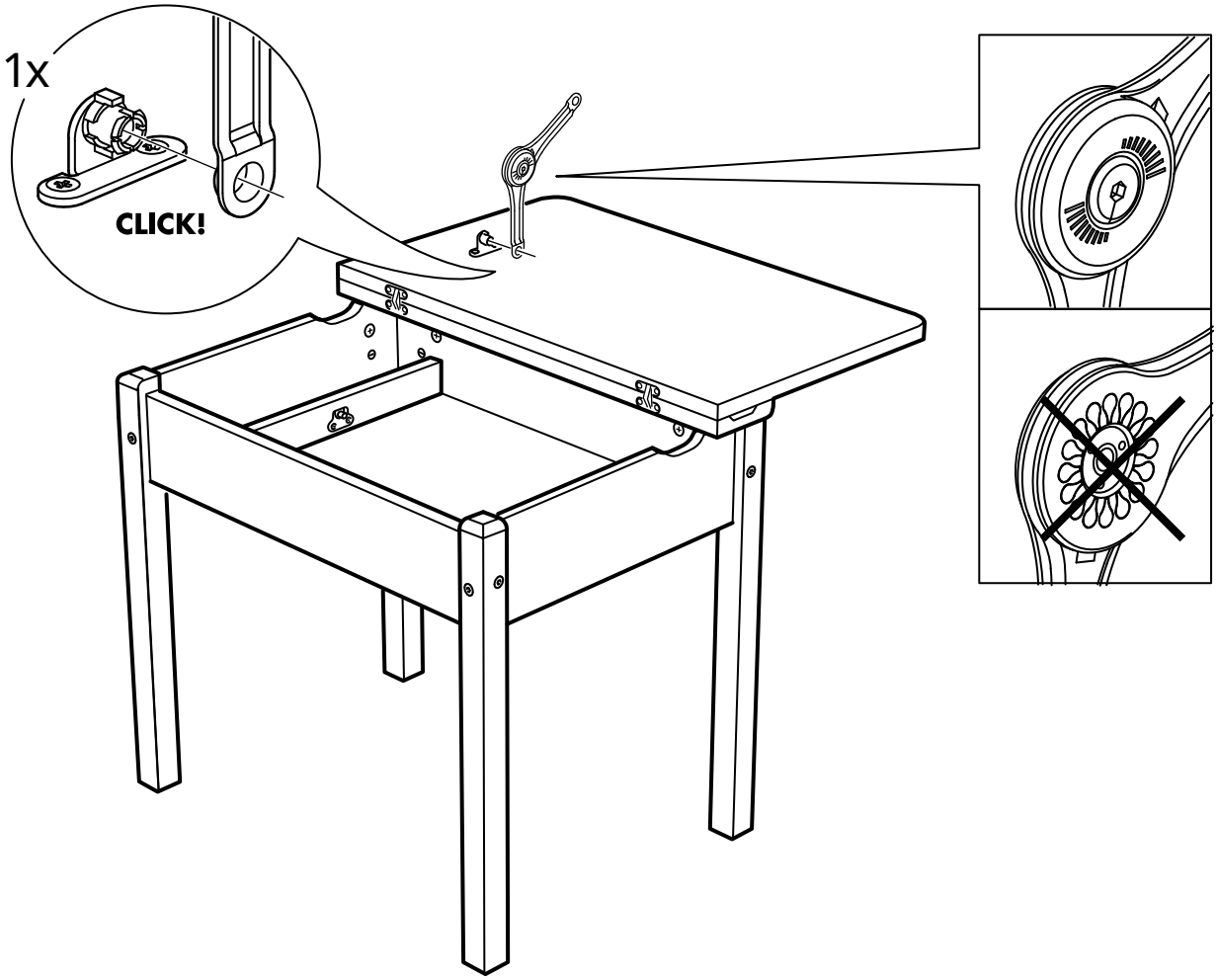

18

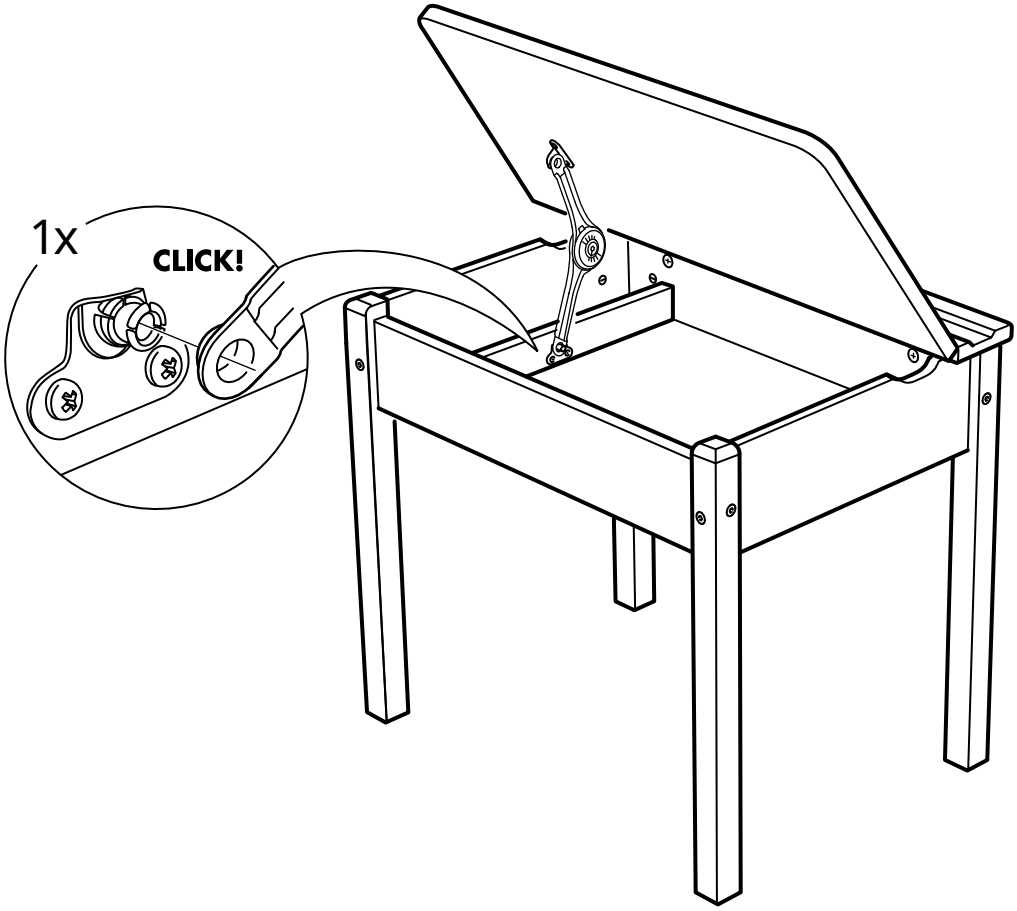

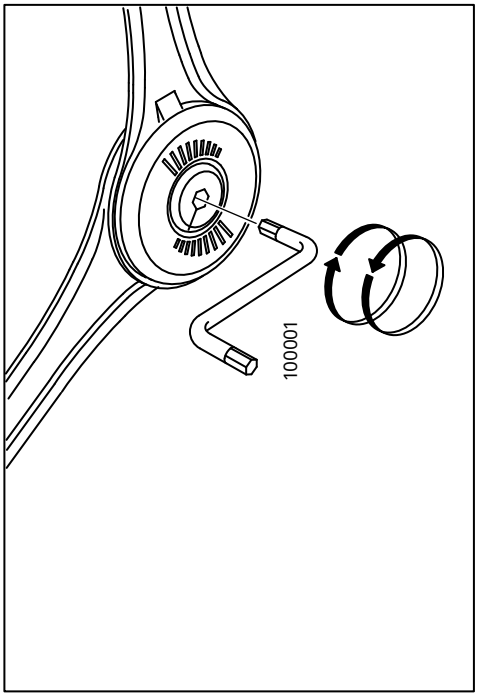

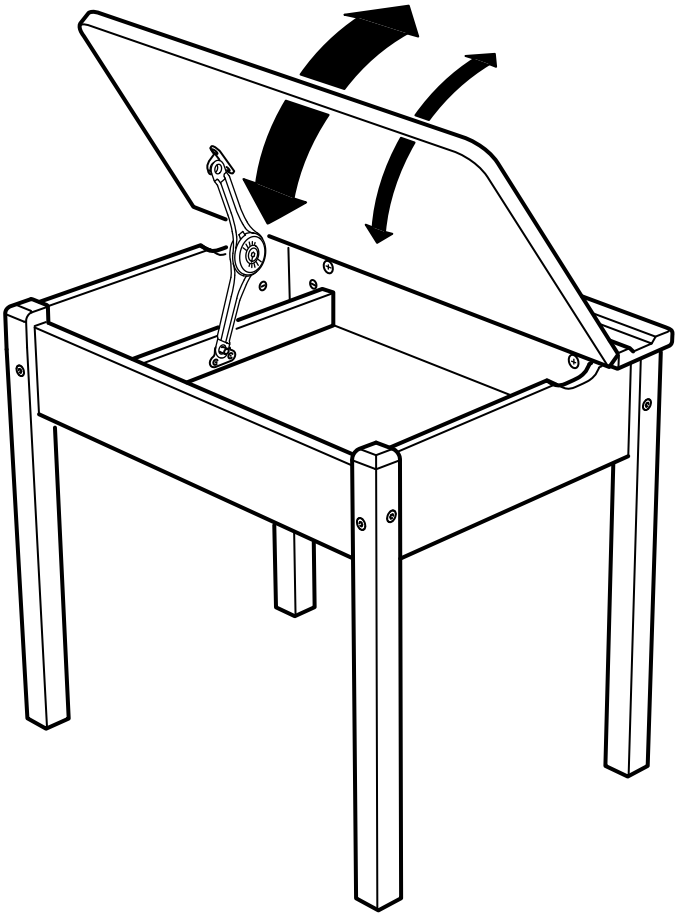

© Inter IKEA Systems B.V. 2016