HAVSTA

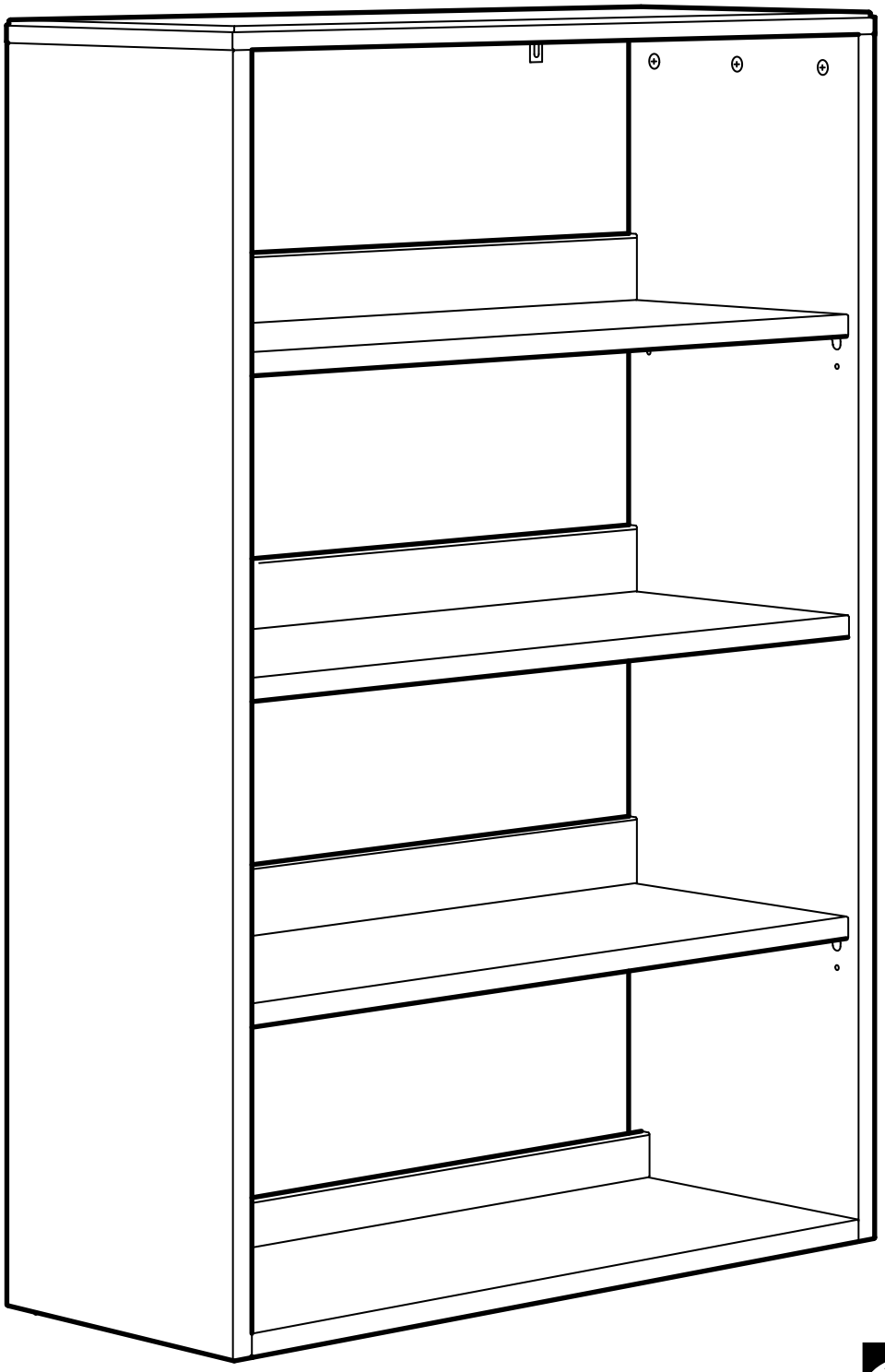

Design and Quality
IKEA of Sweden

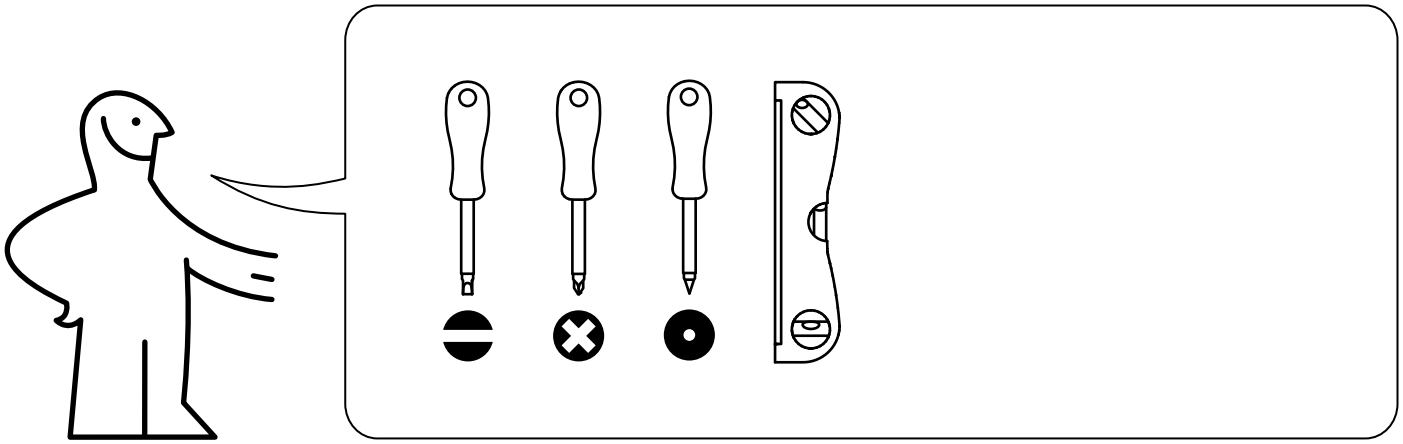

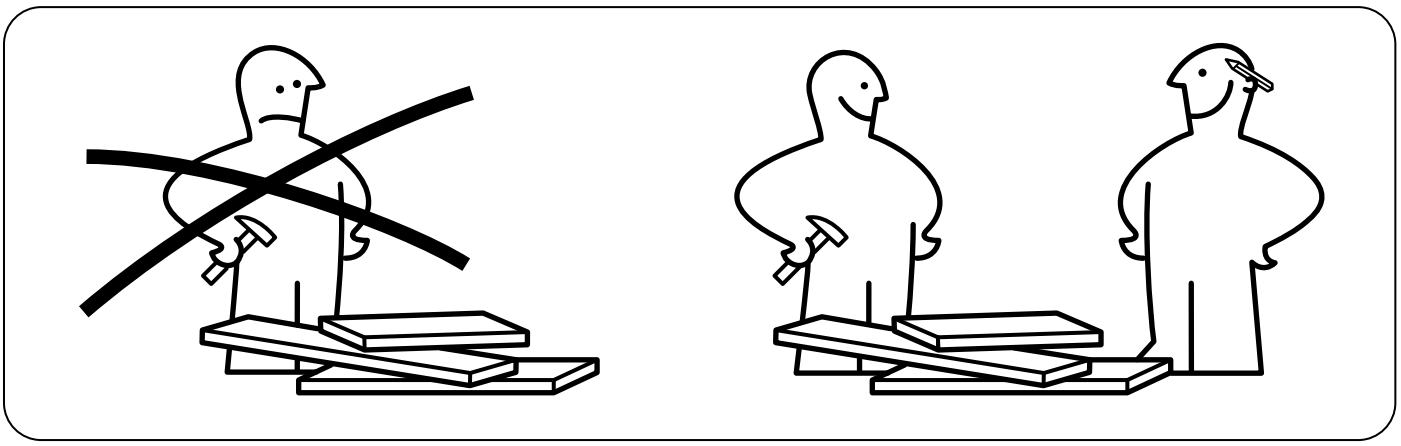

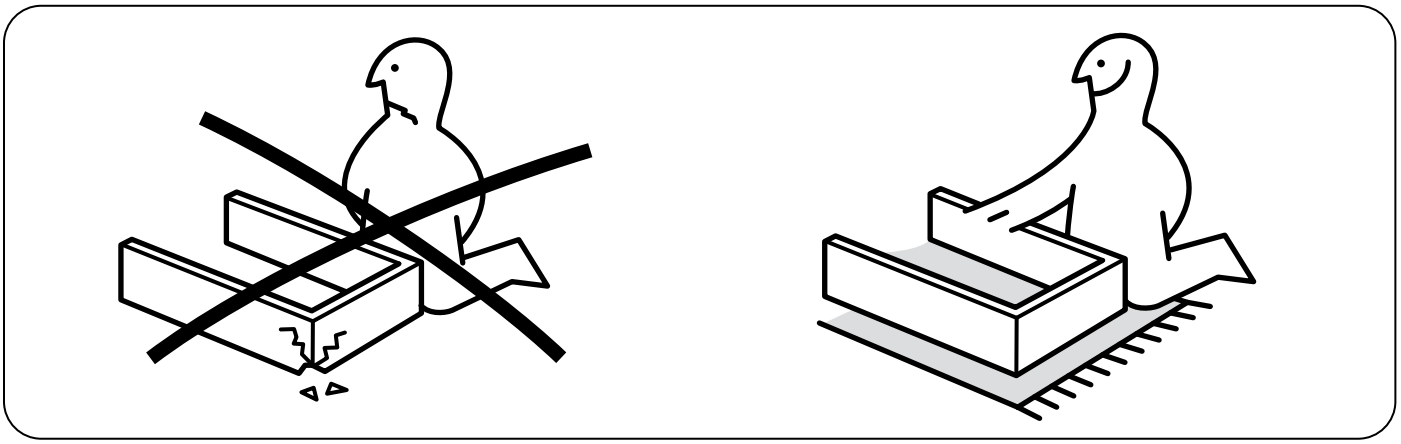

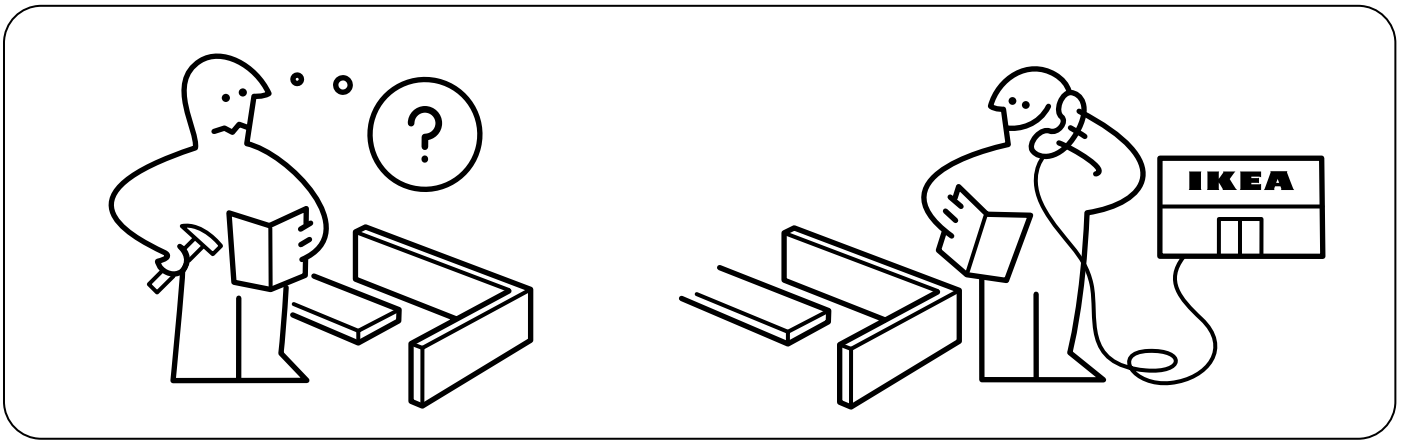
?
IKEA

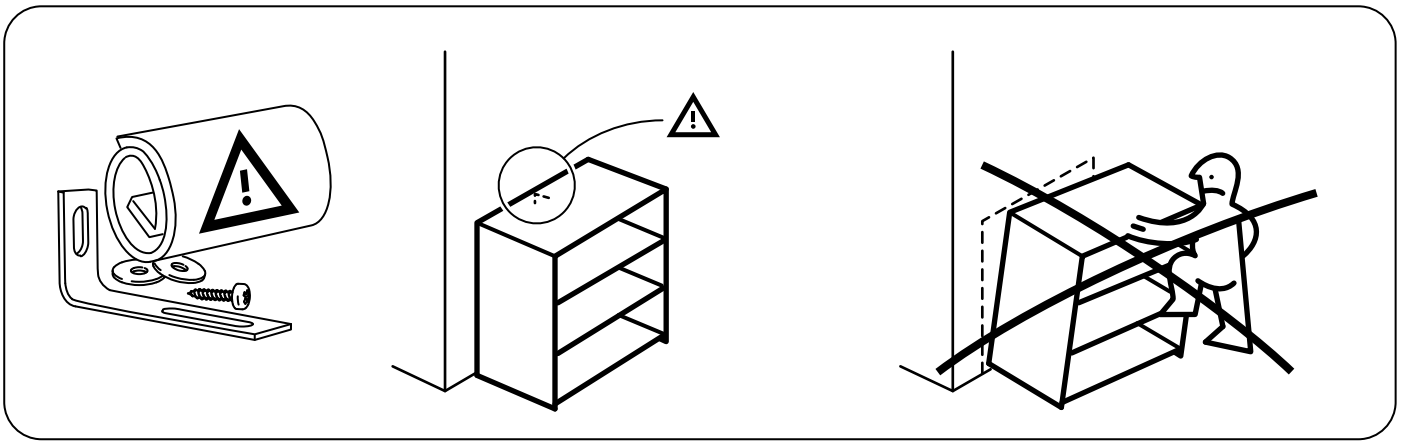

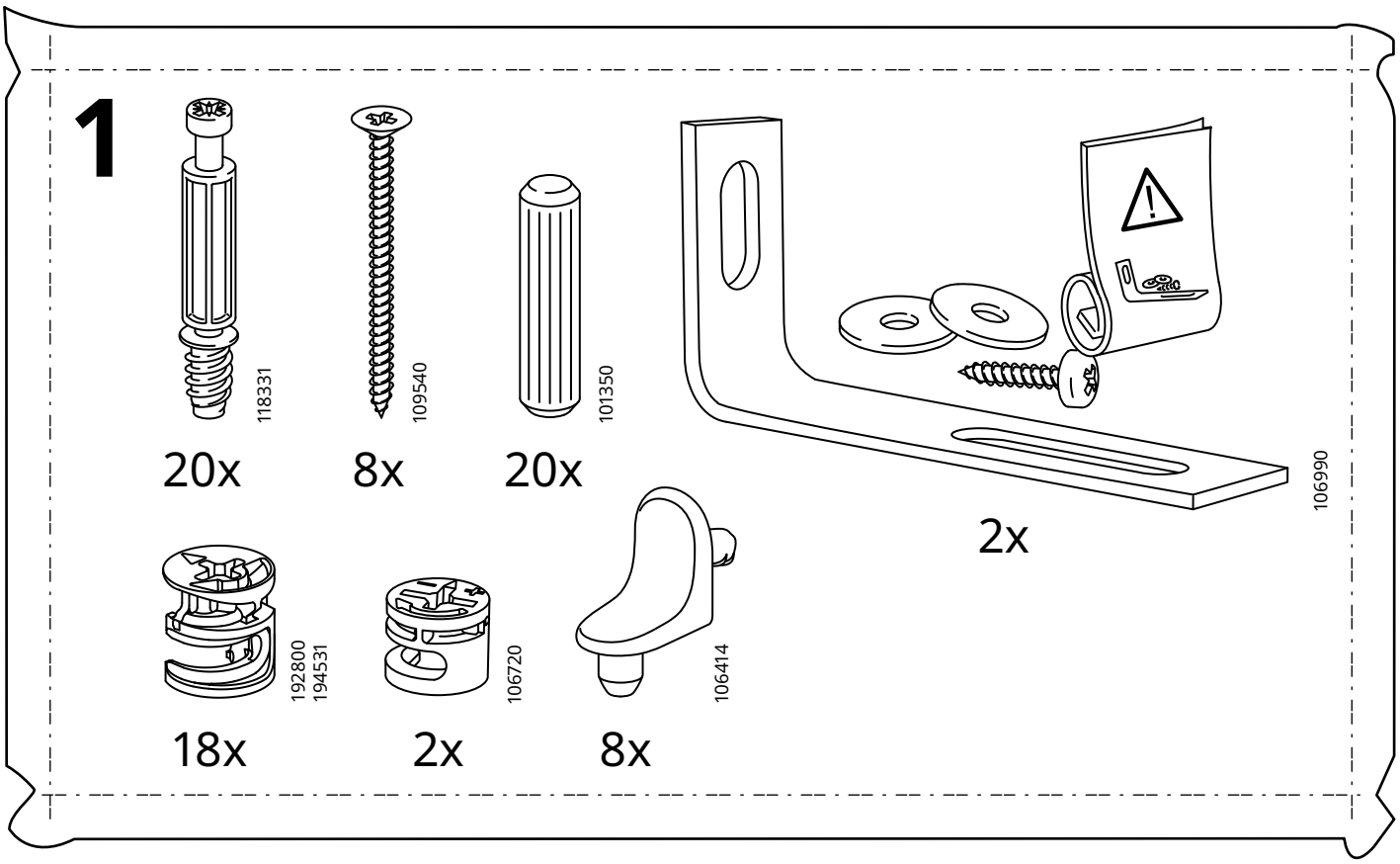
1
118331
20x
109540
8x
101350
20x
106990
2x
192800
194531
18x
106720
2x
106414
8x

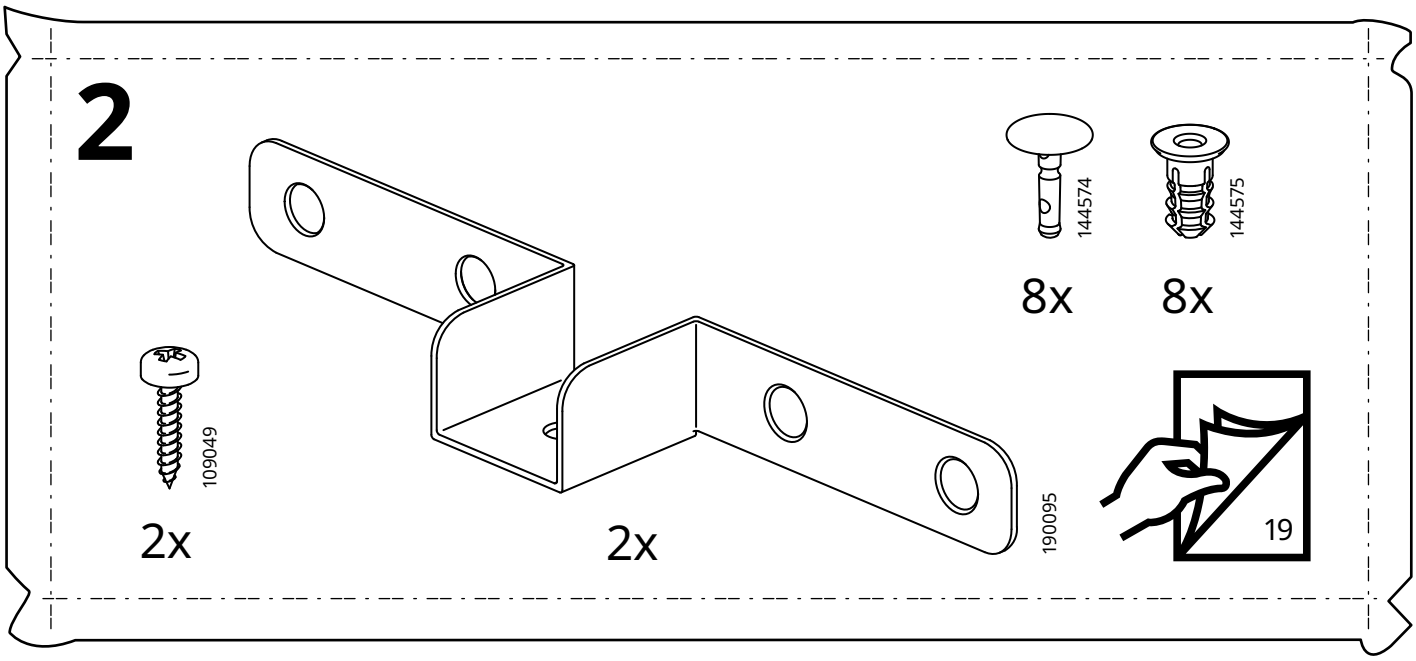
2
144574
8x
144575
8x
109049
2x
190095
2x
19

1

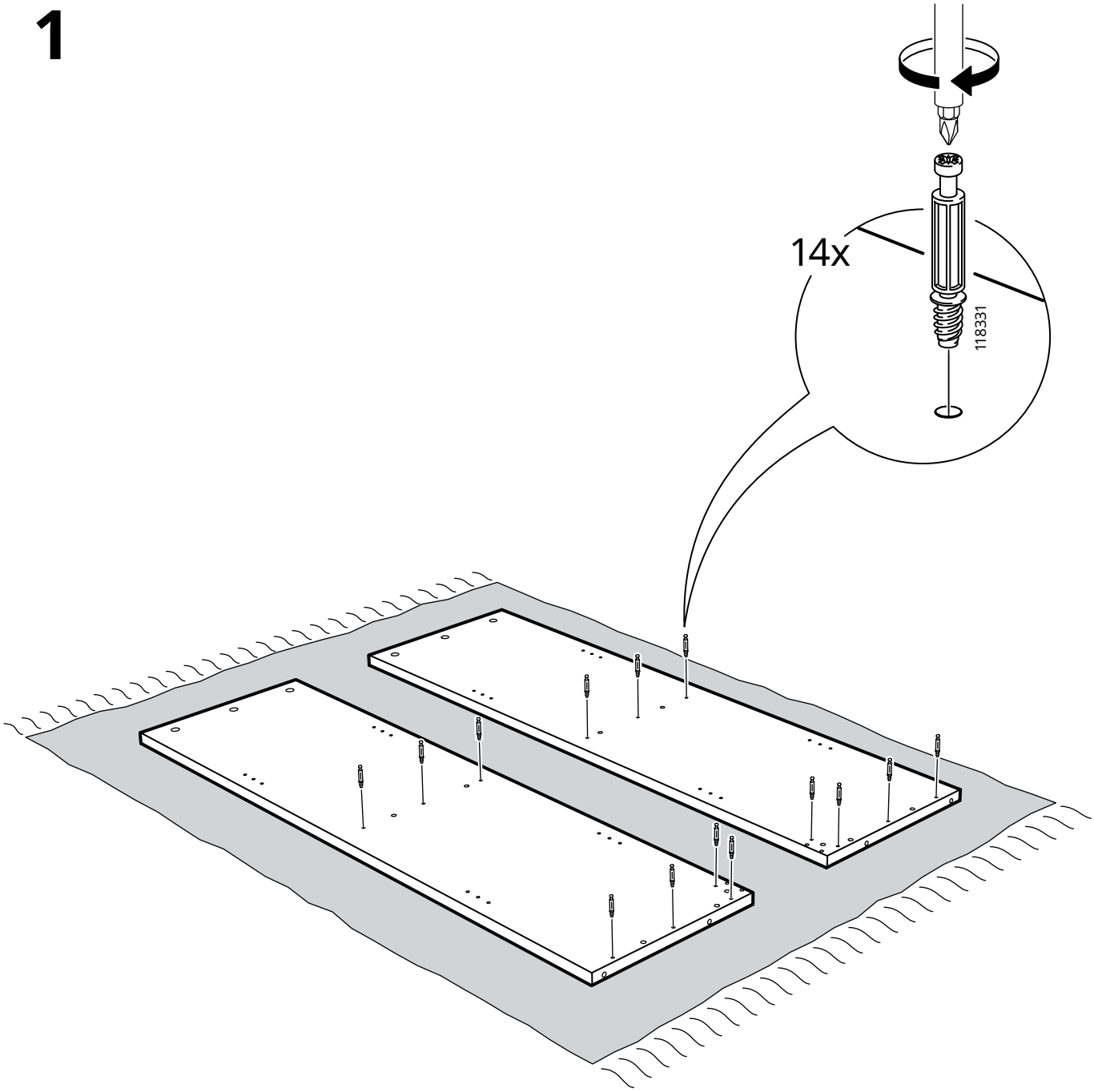

2

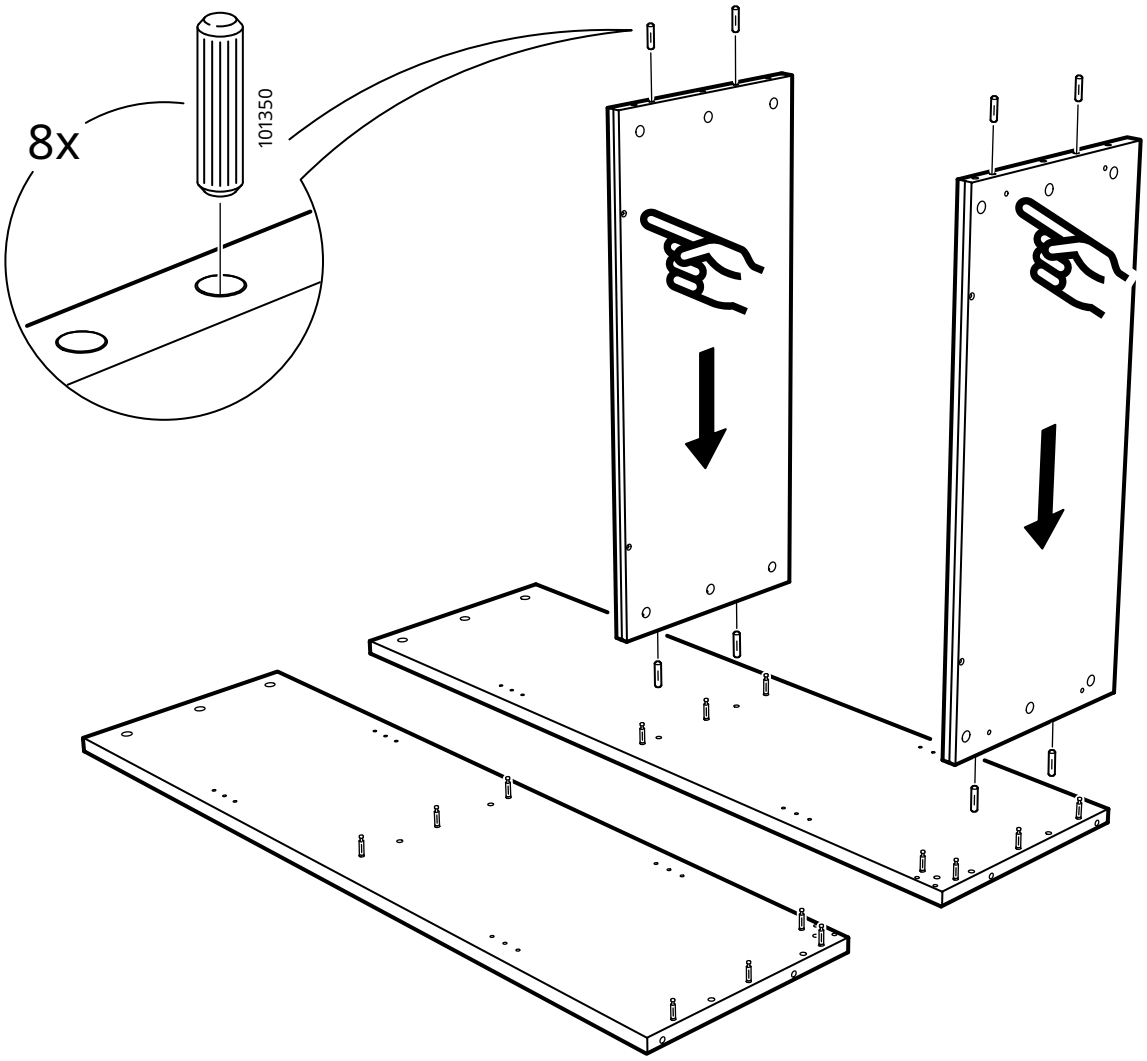

3

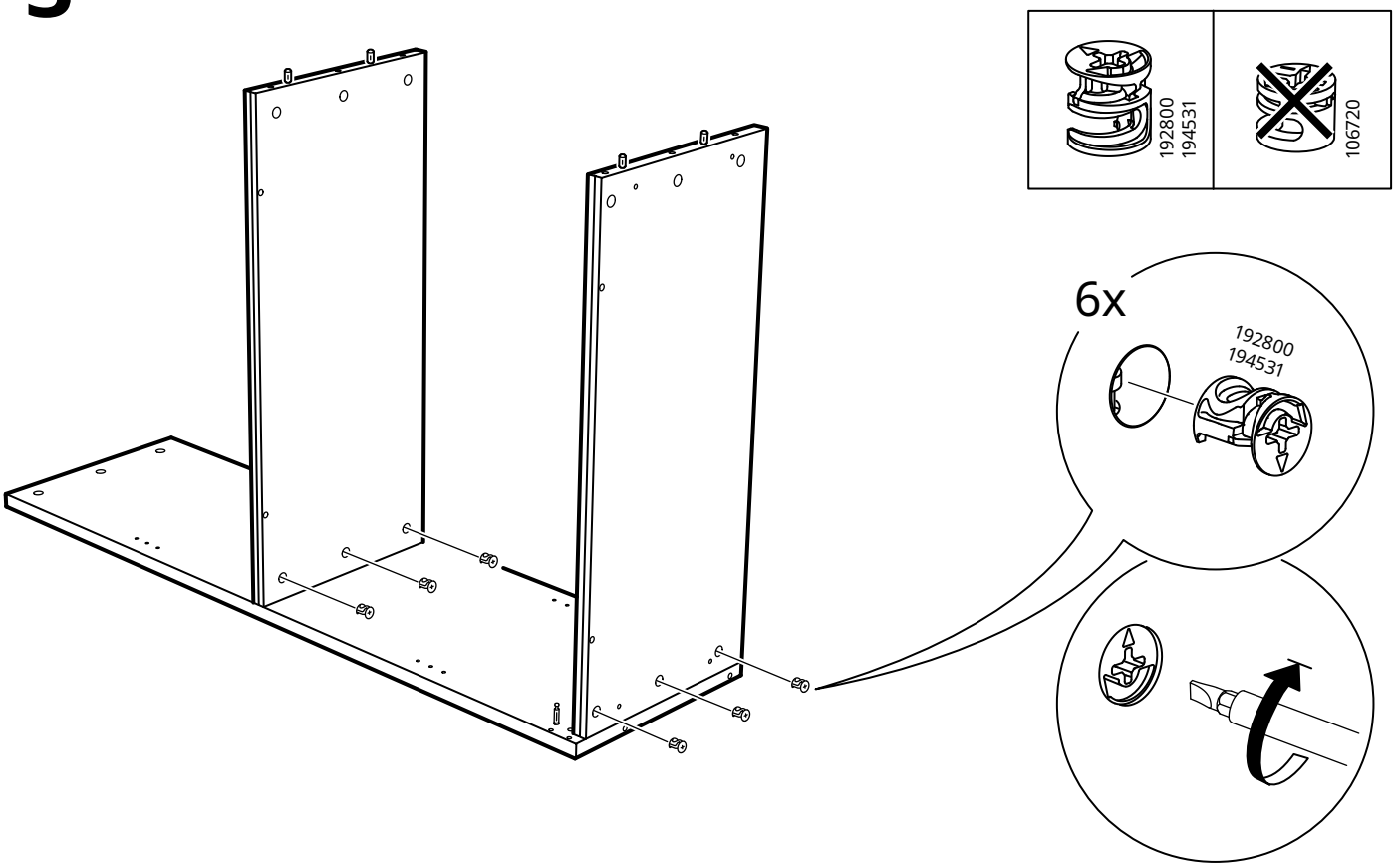

4

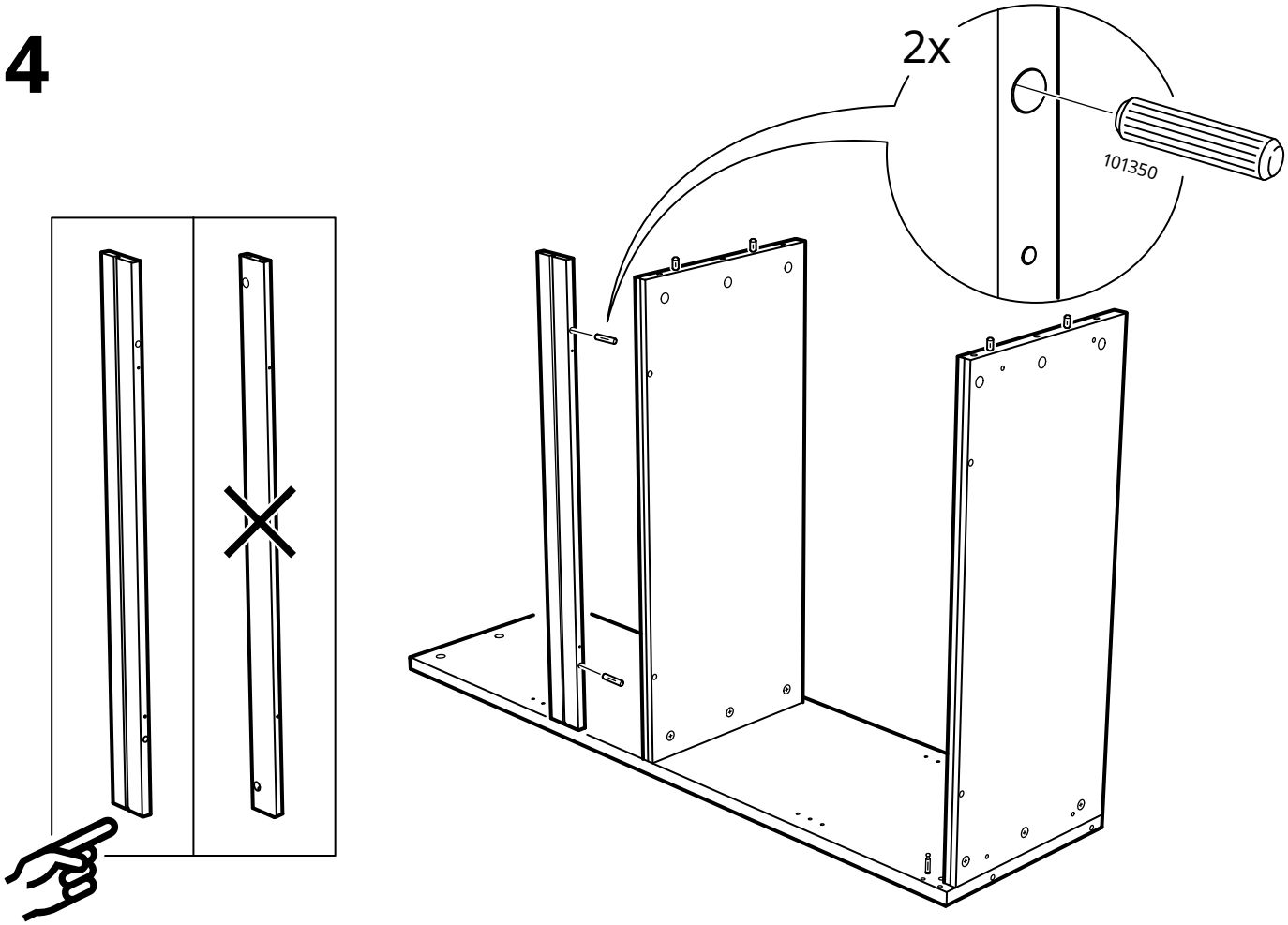

5

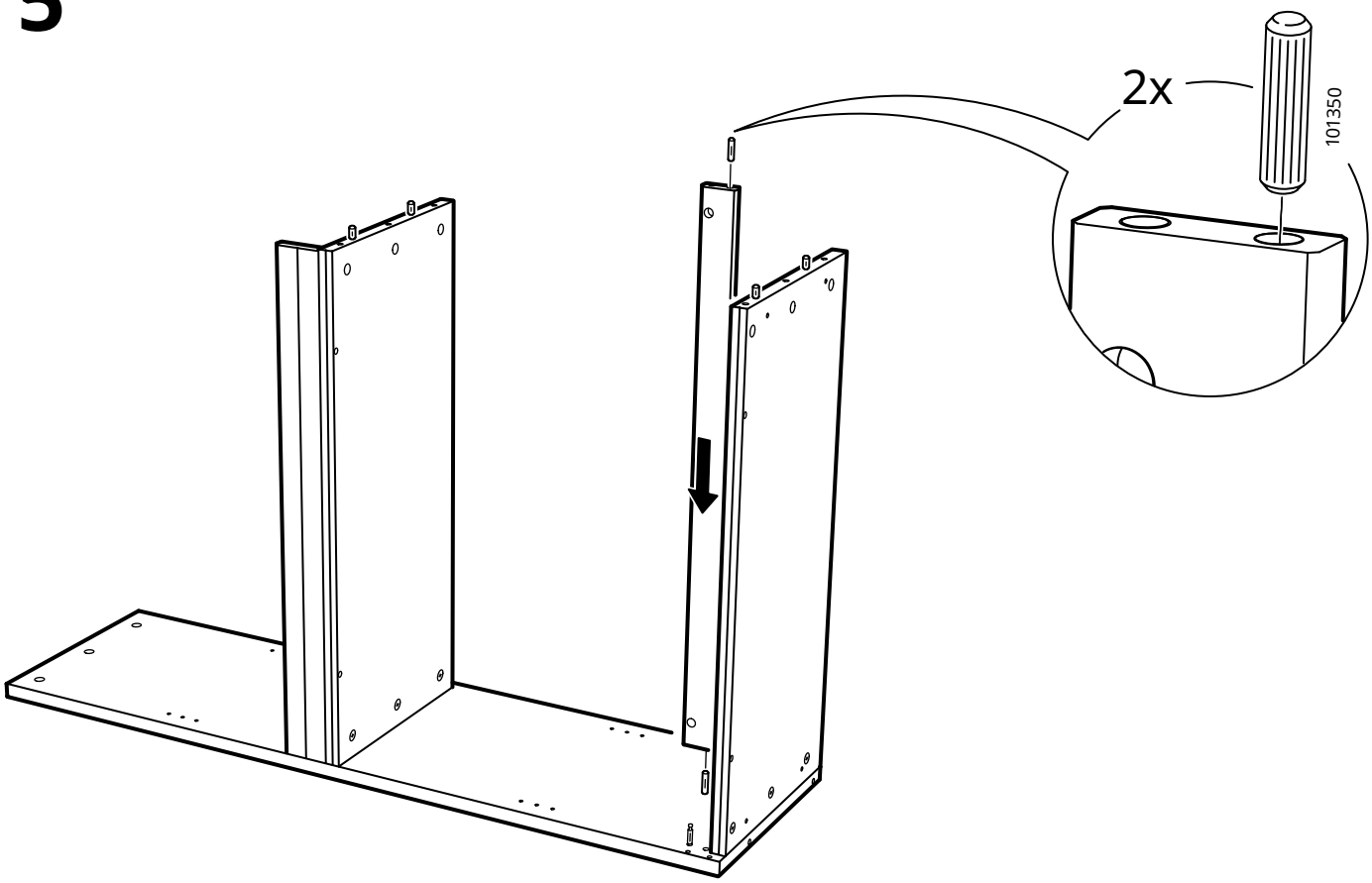

6

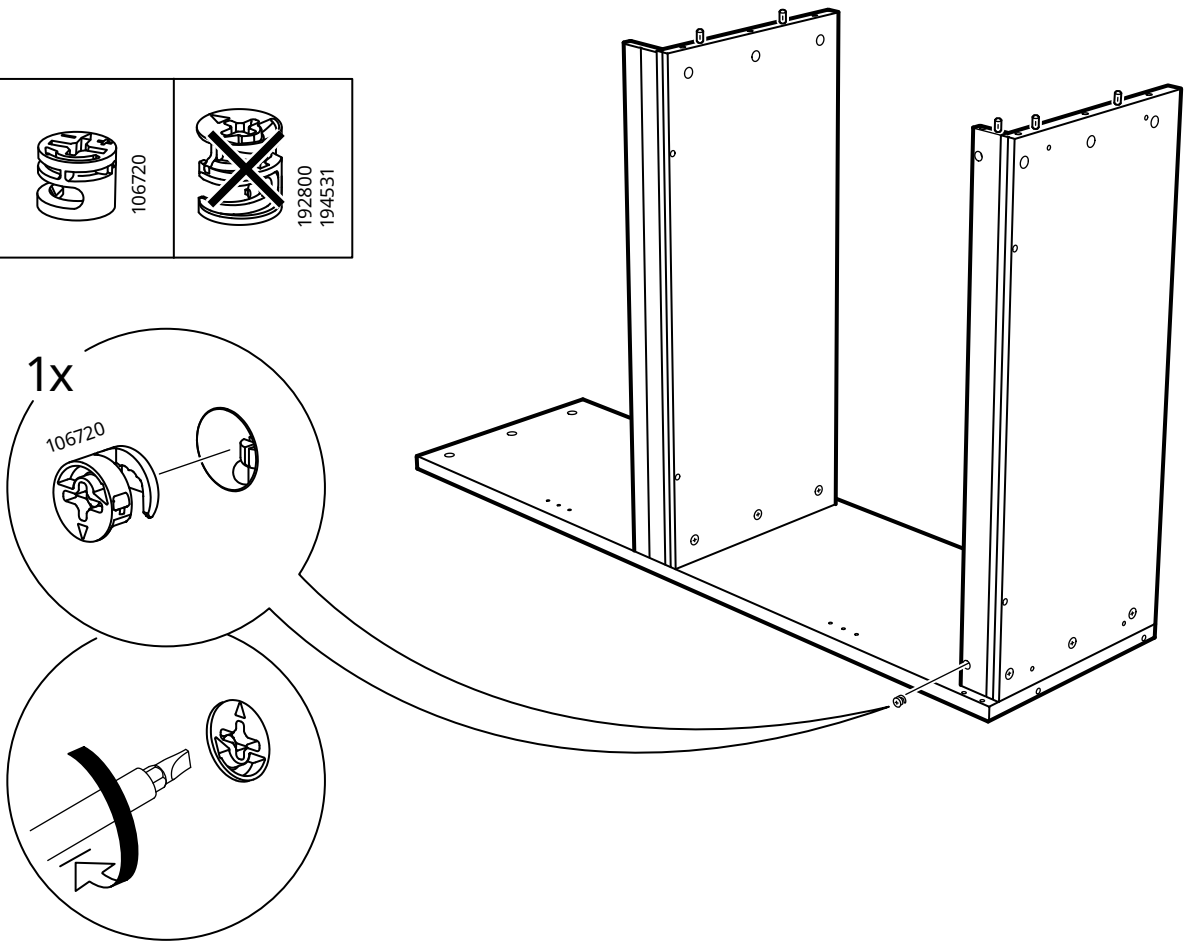

7

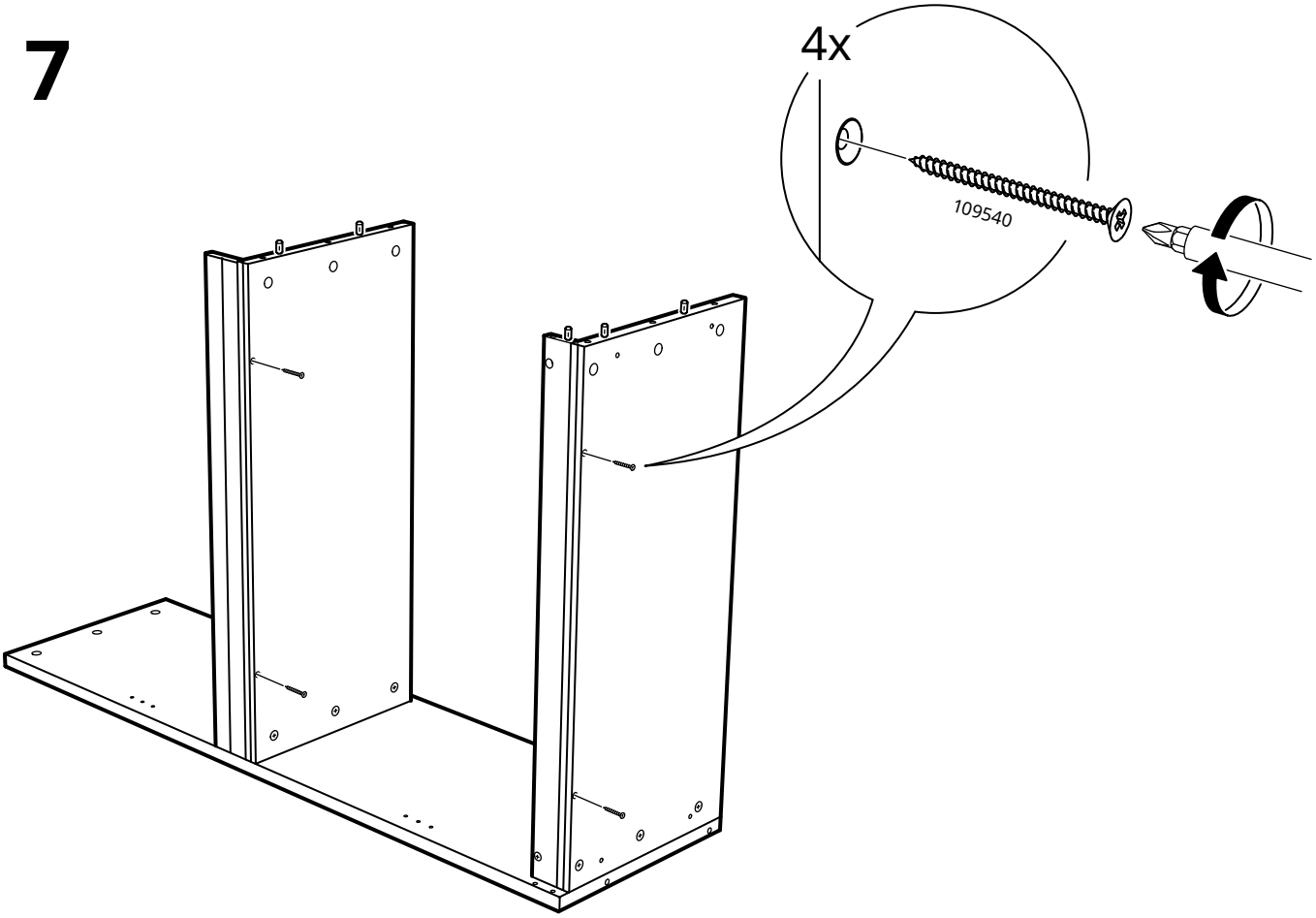

8

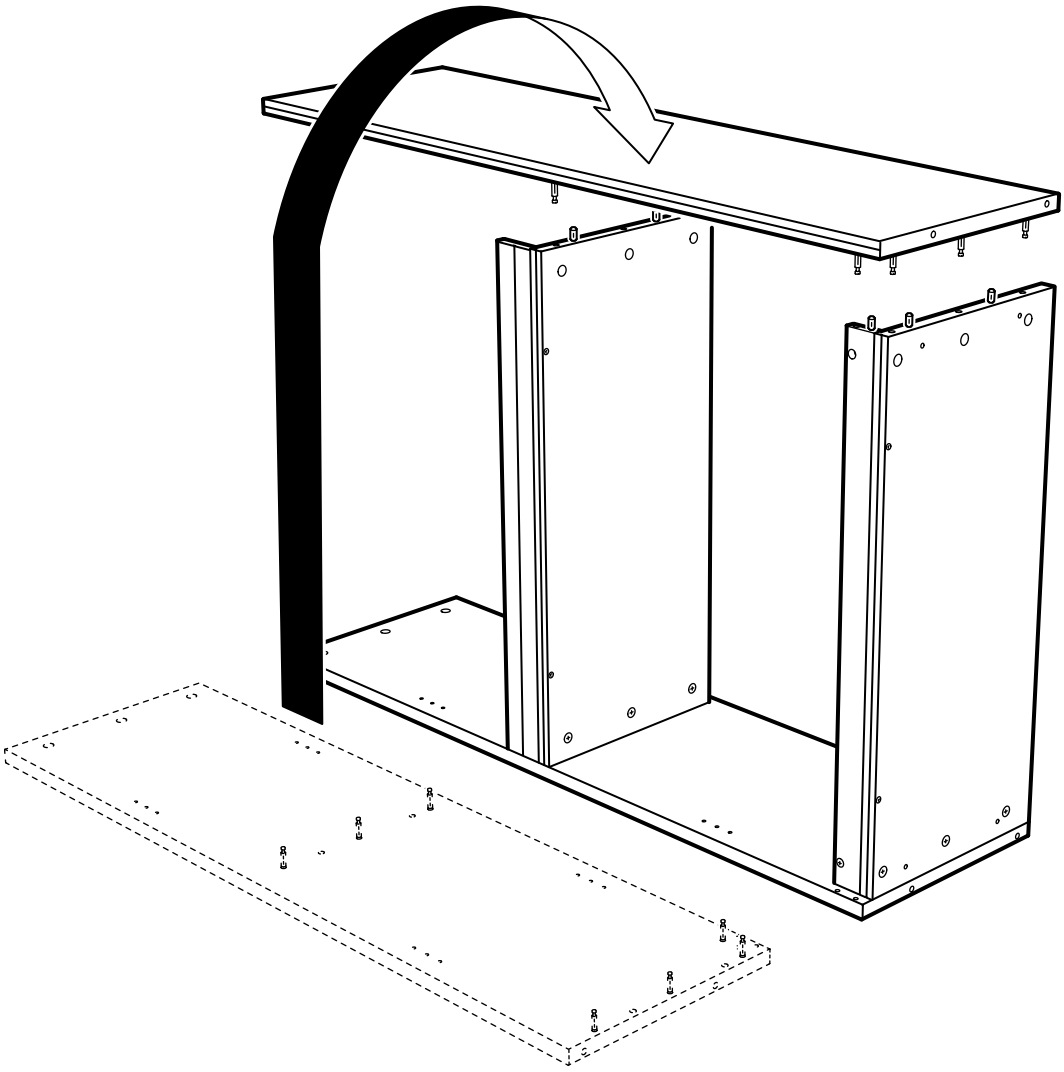

9

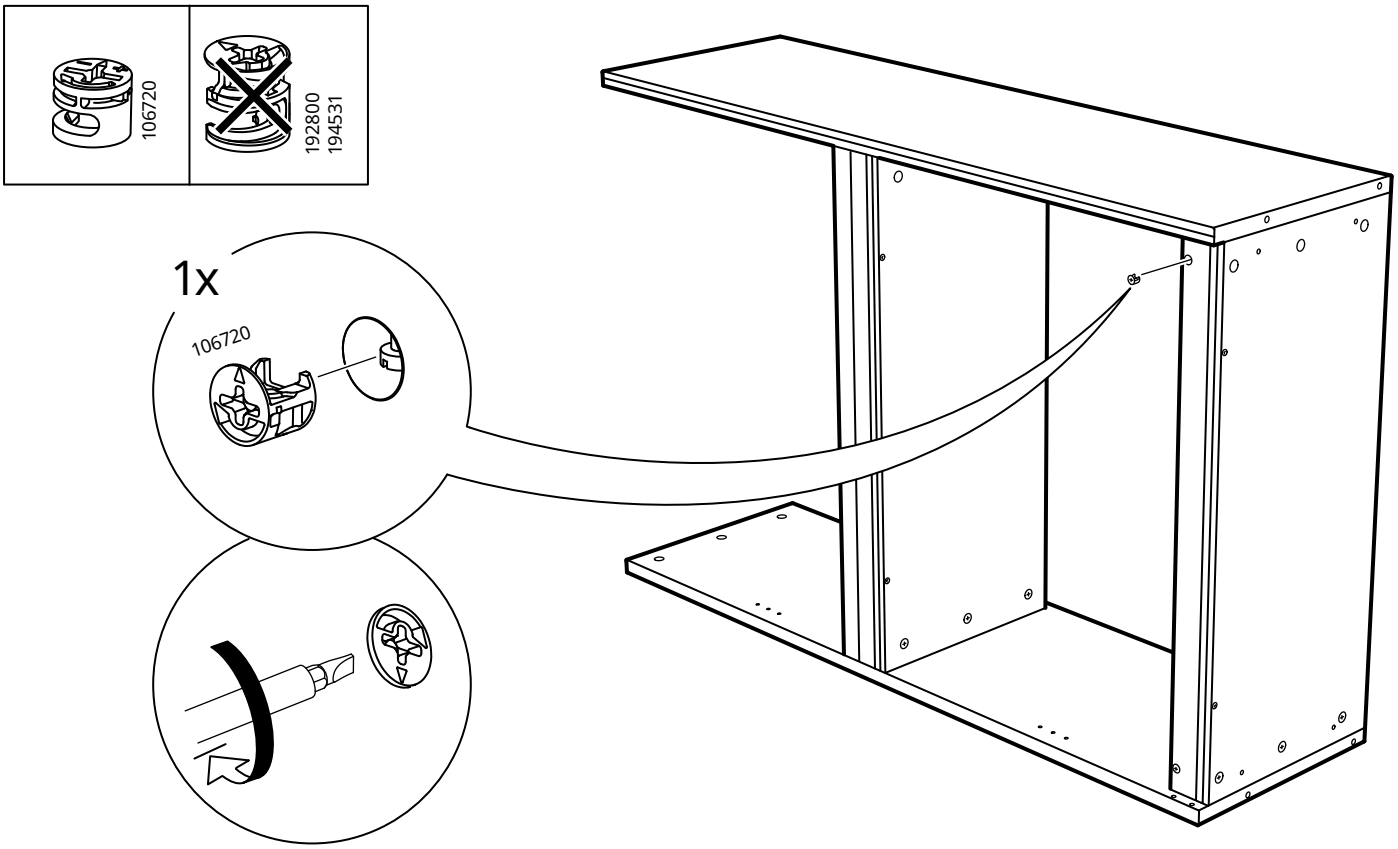

10

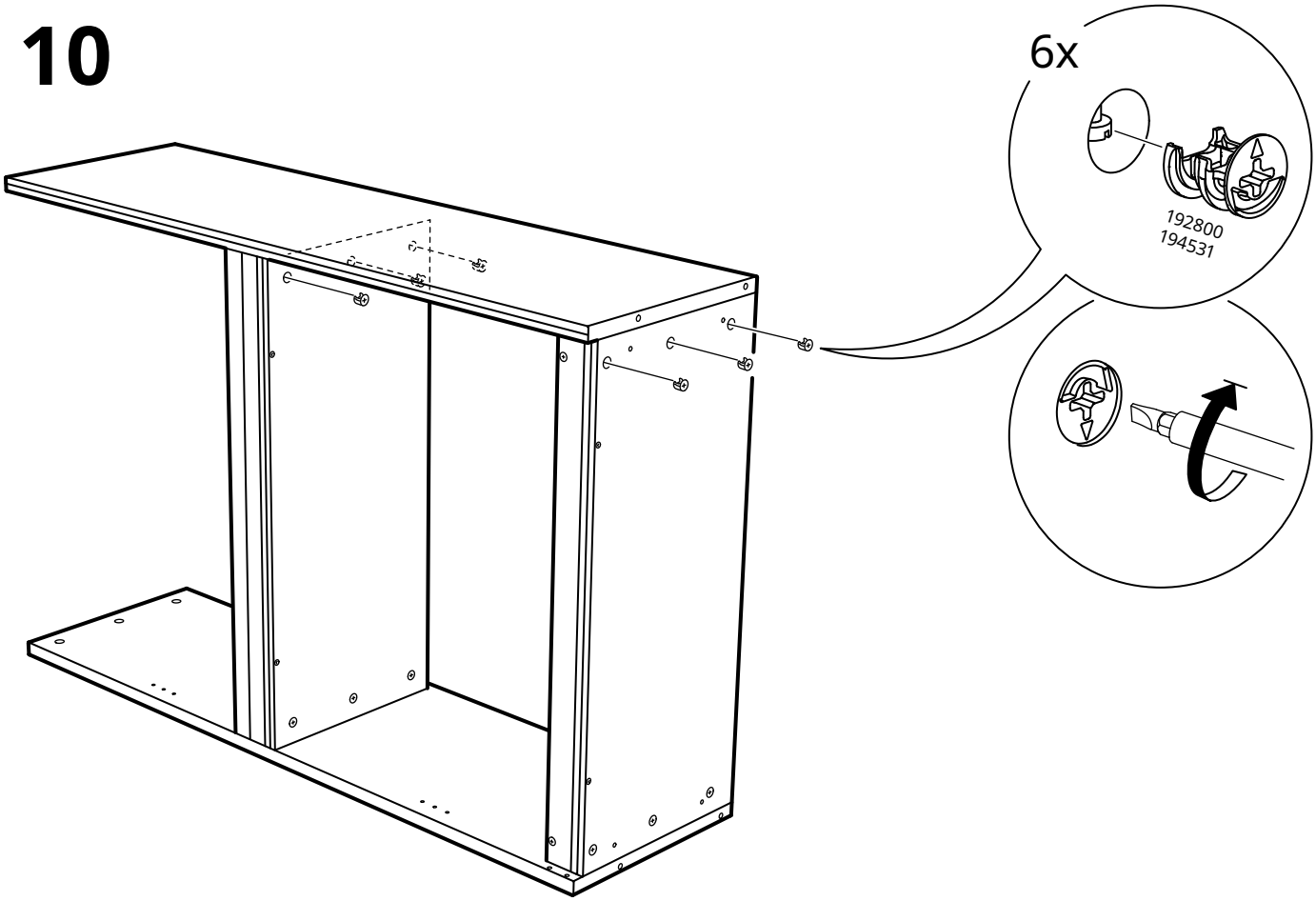

11

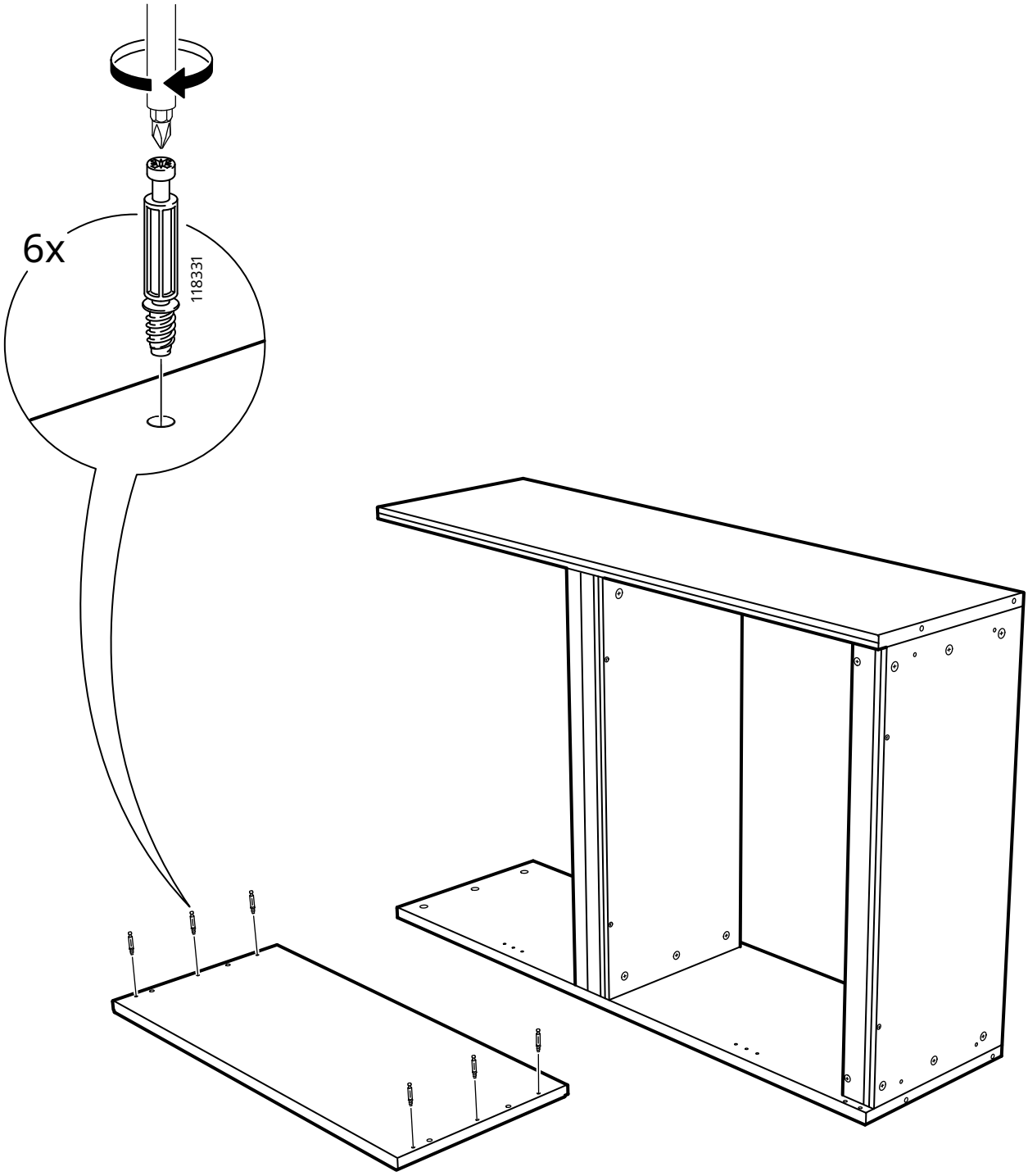

12

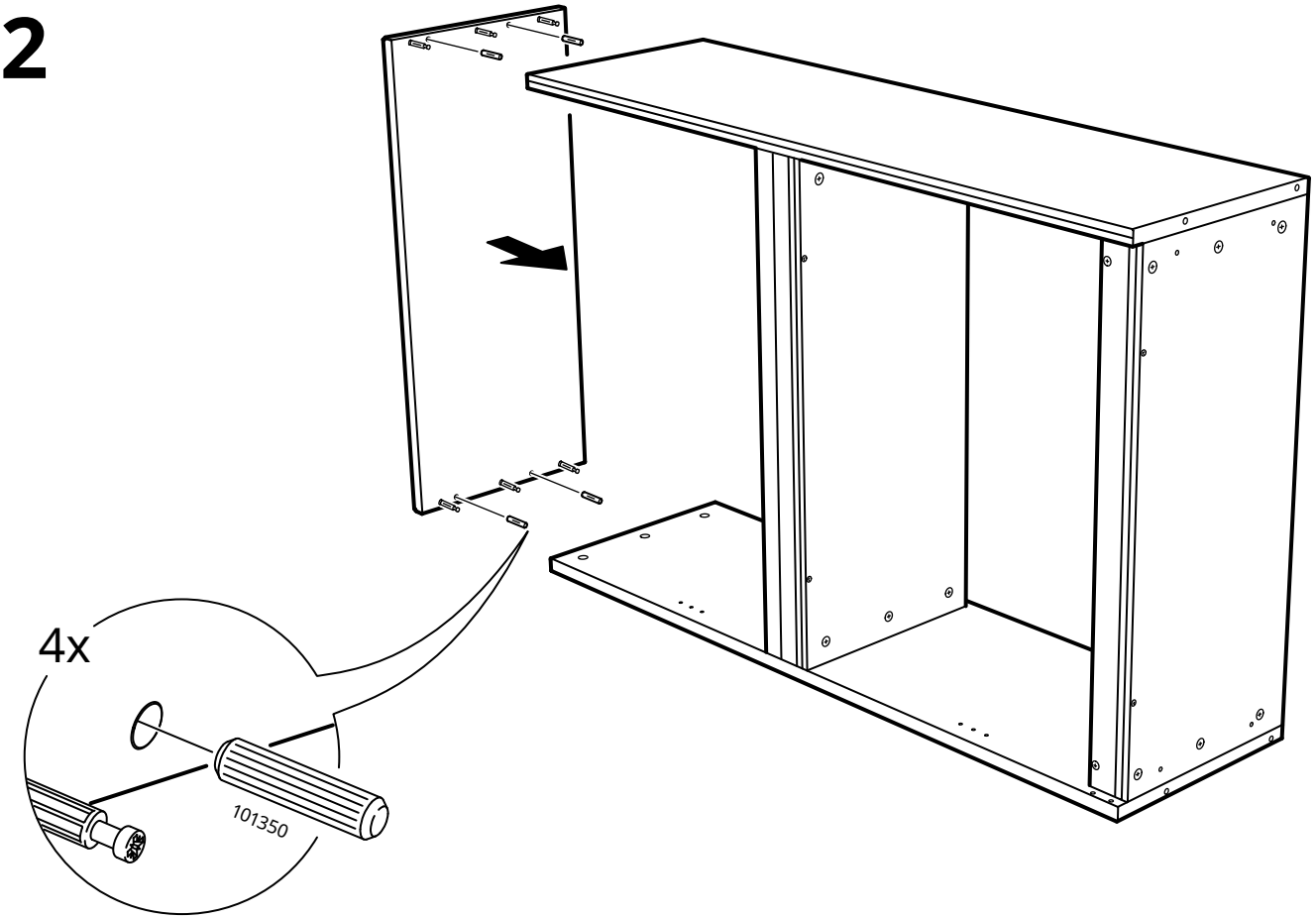

13

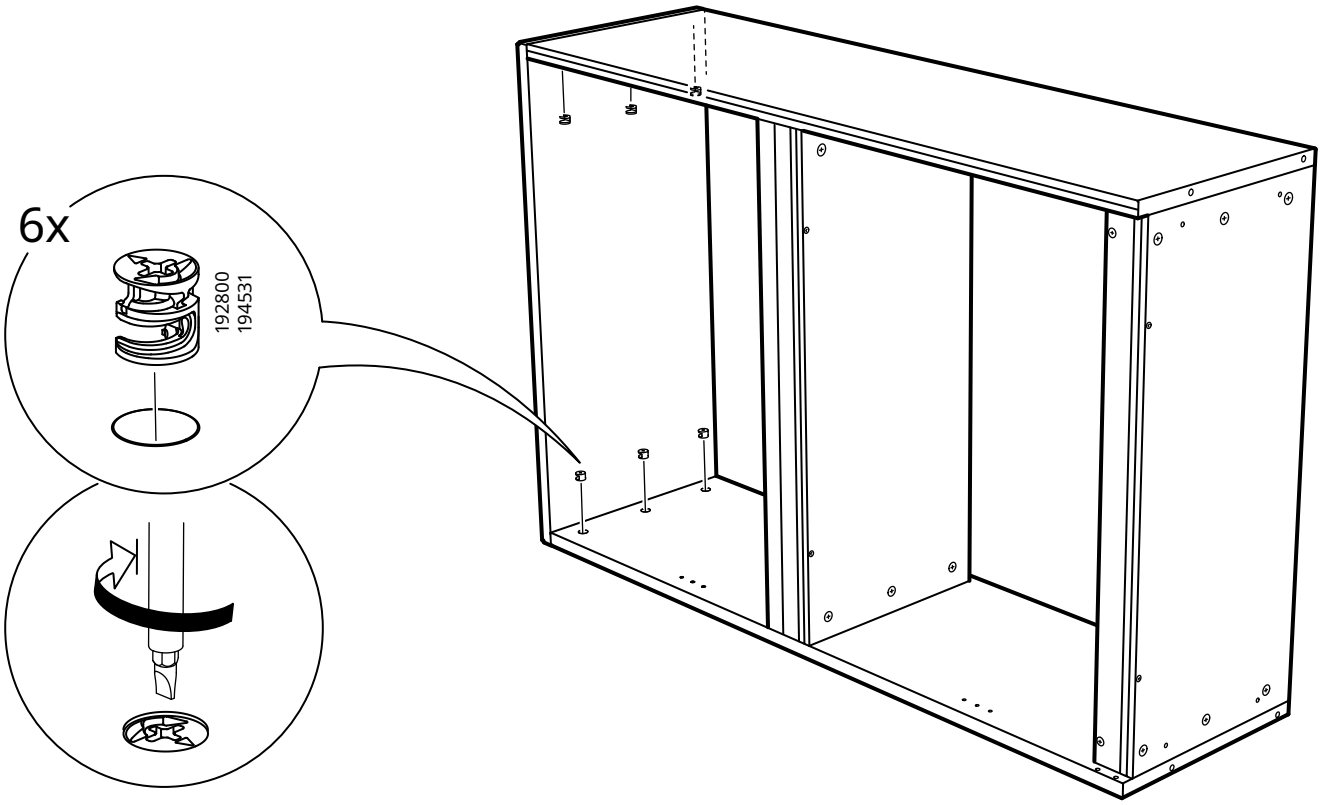

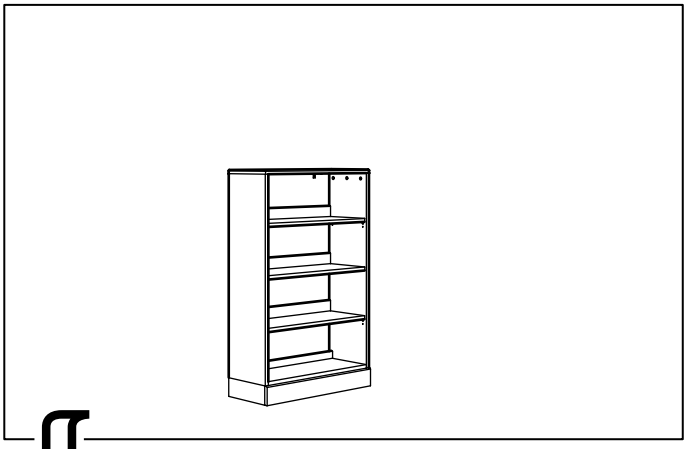

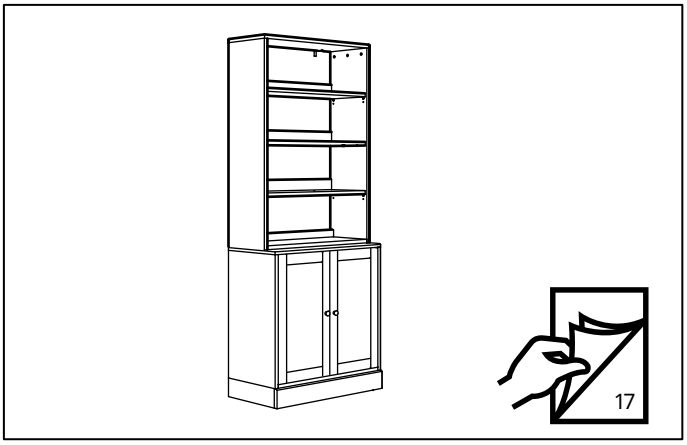

14

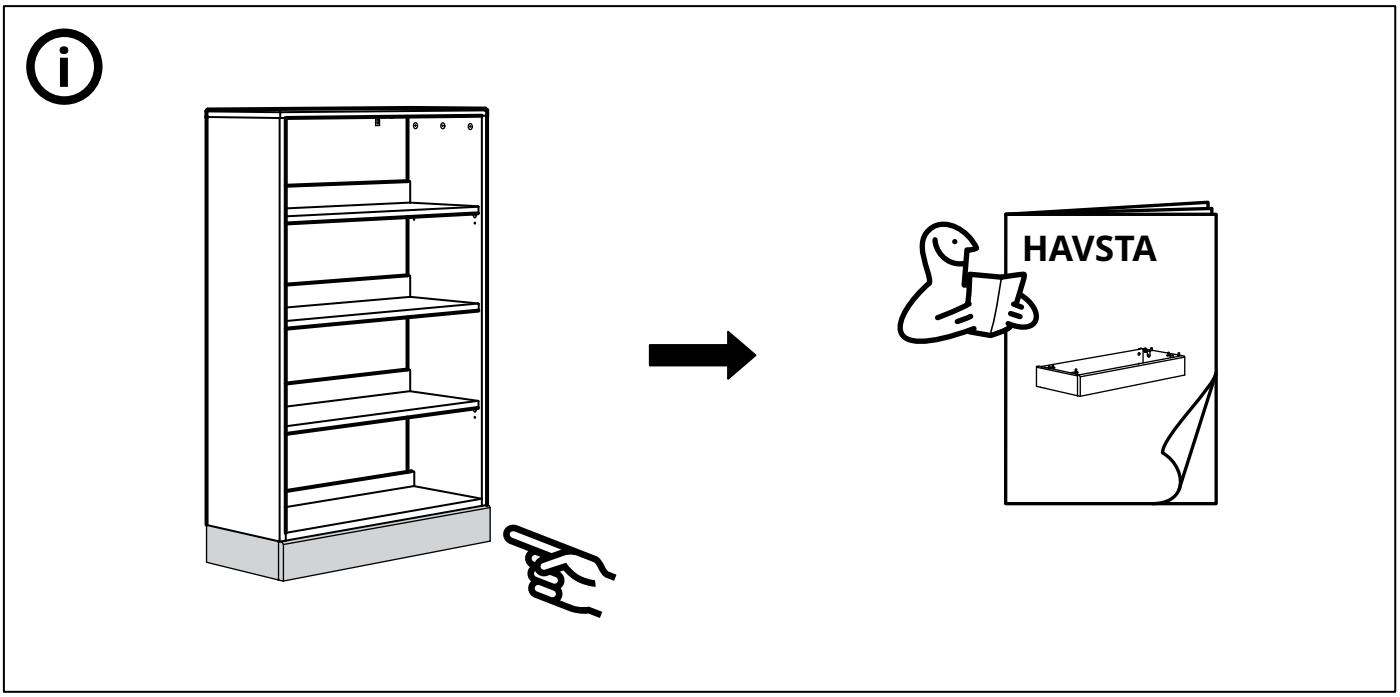

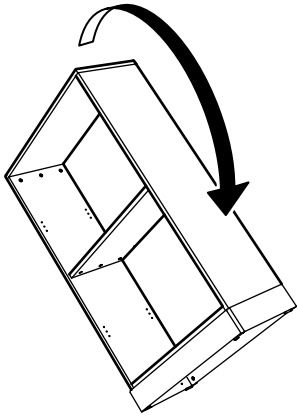

15

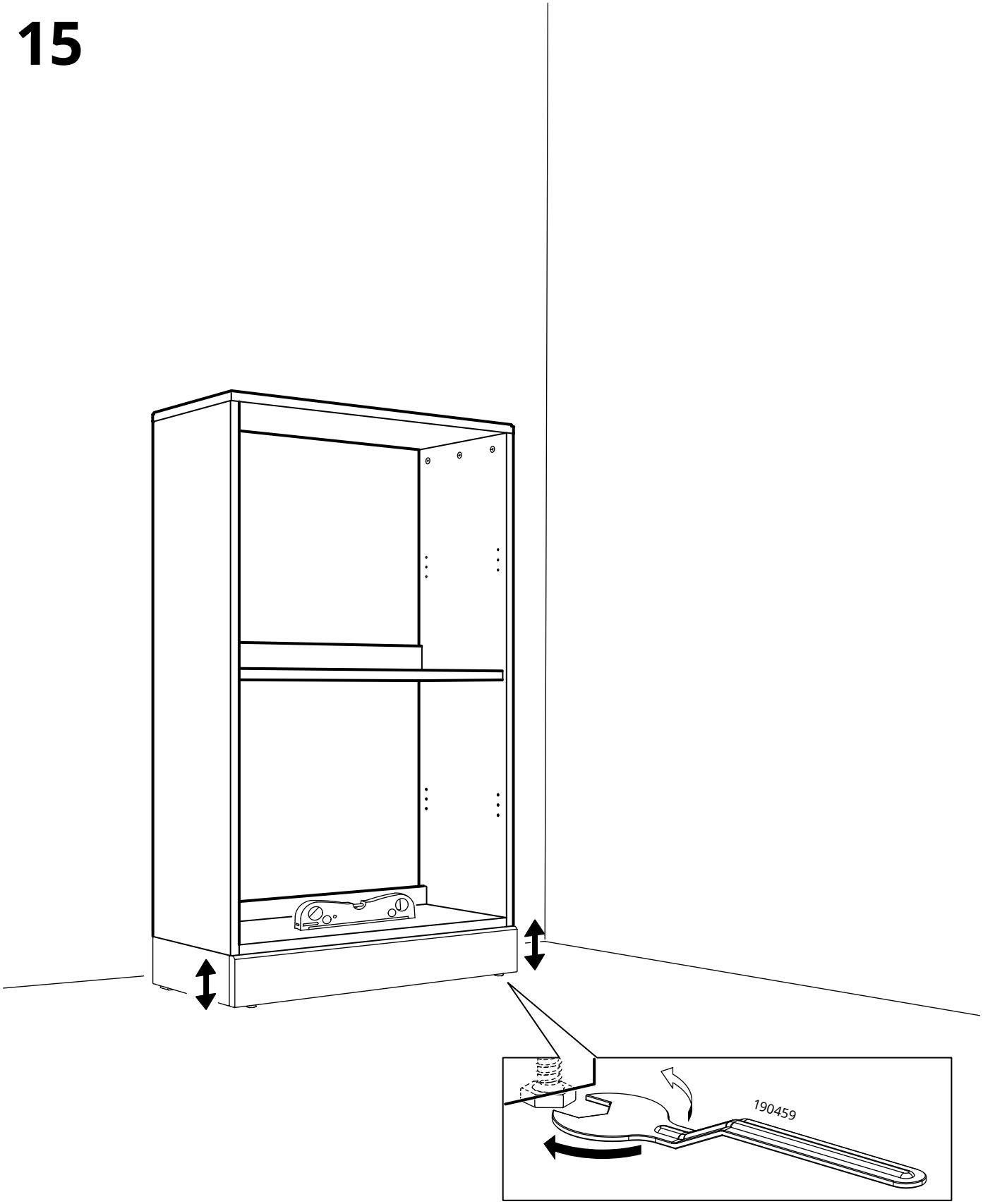

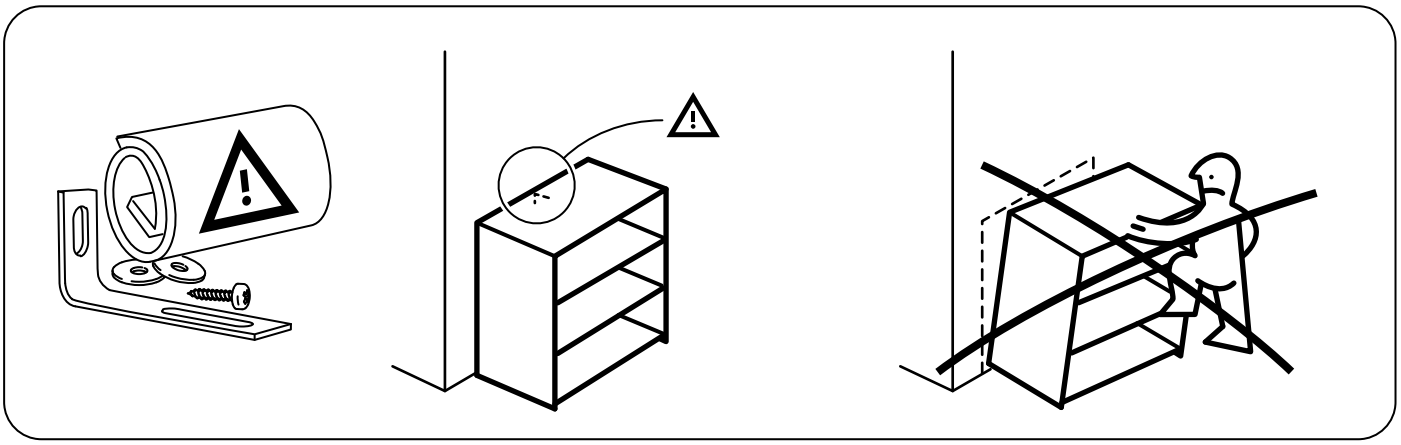

16

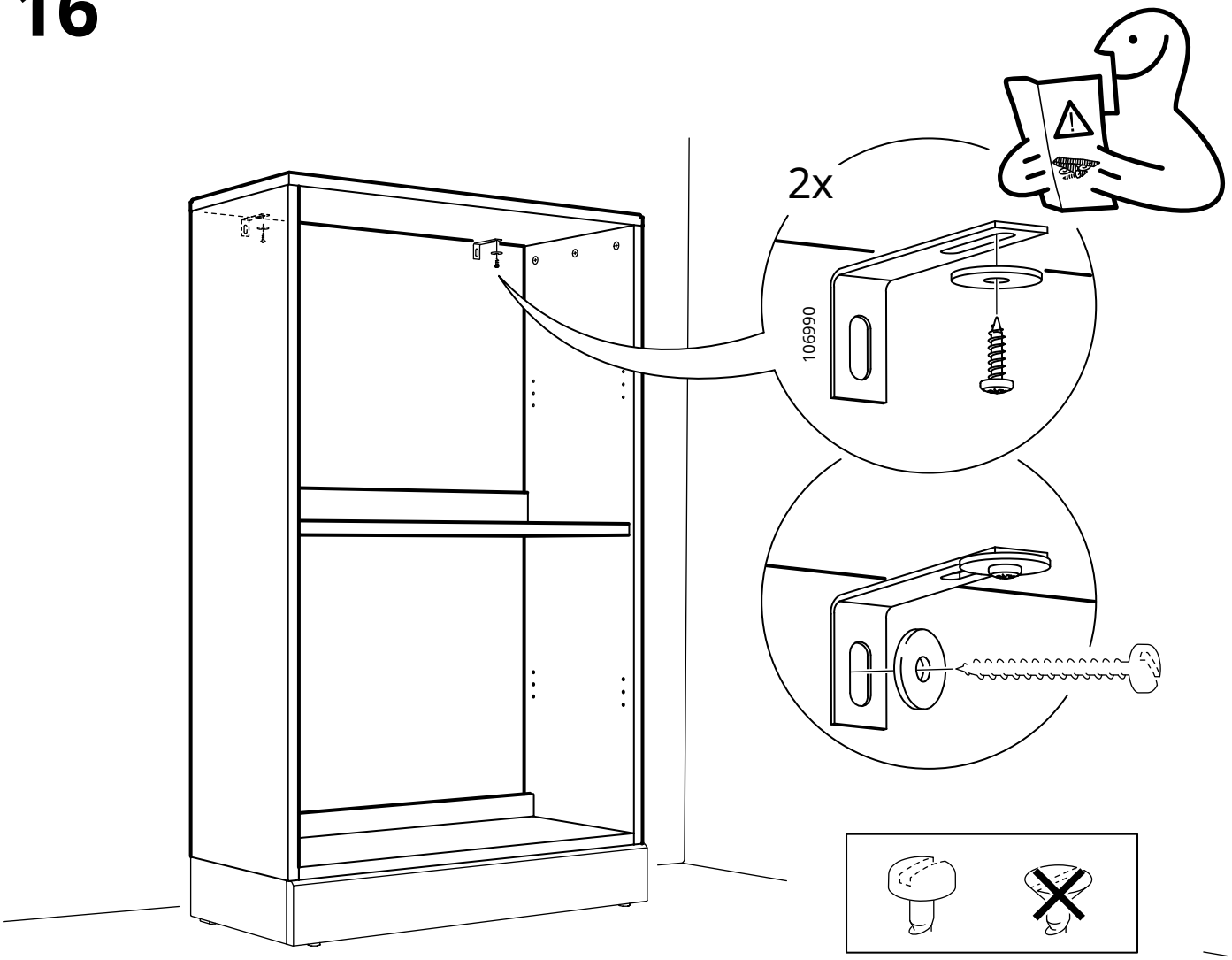

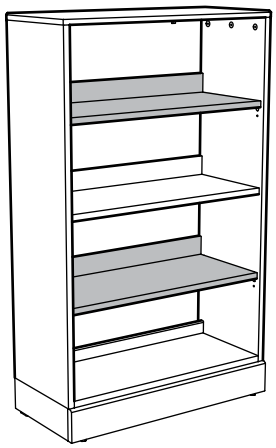

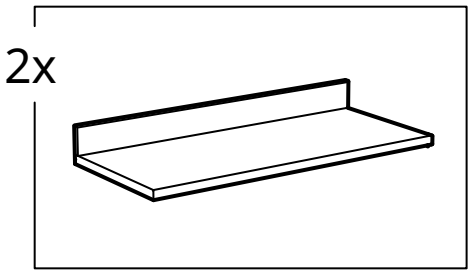

17

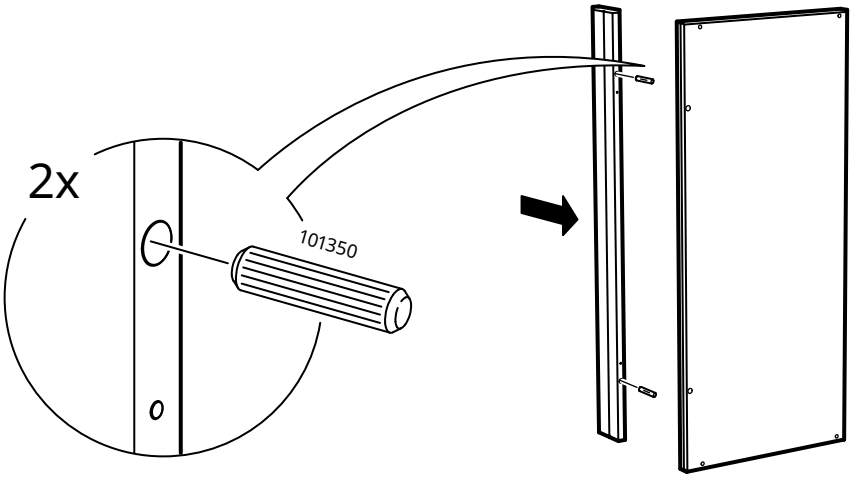

18

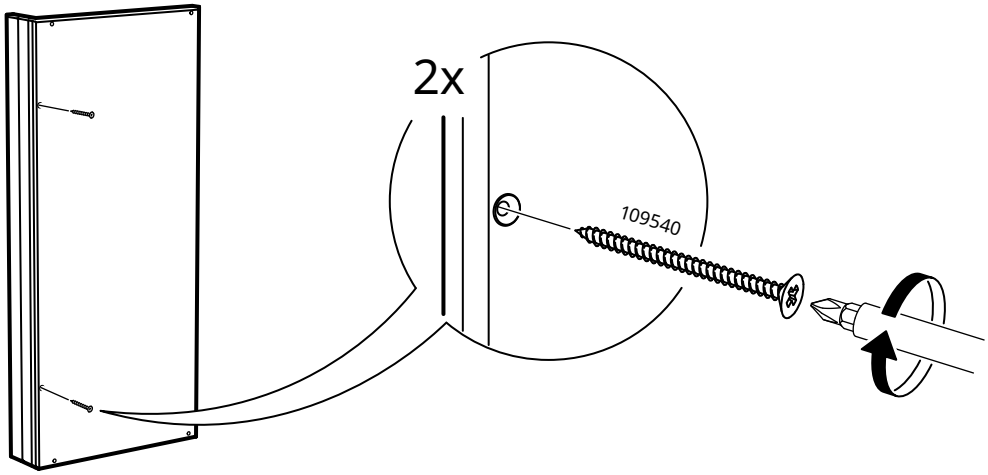

19

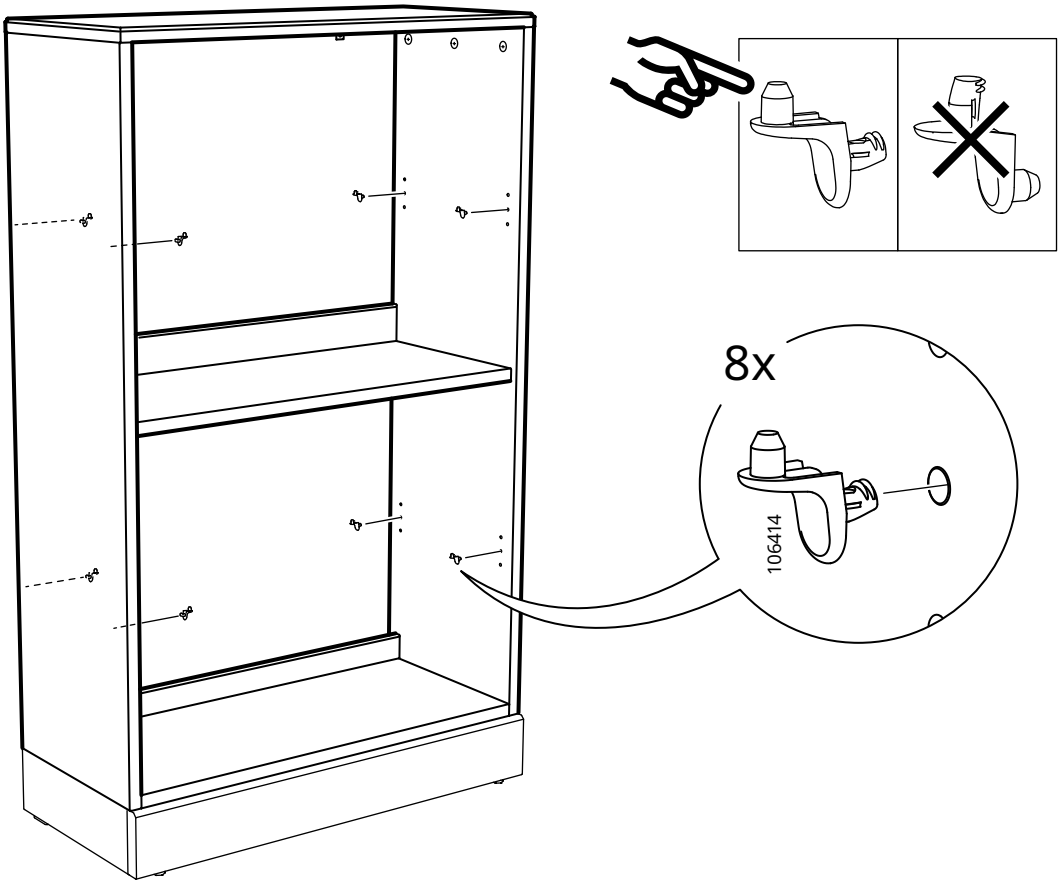

20

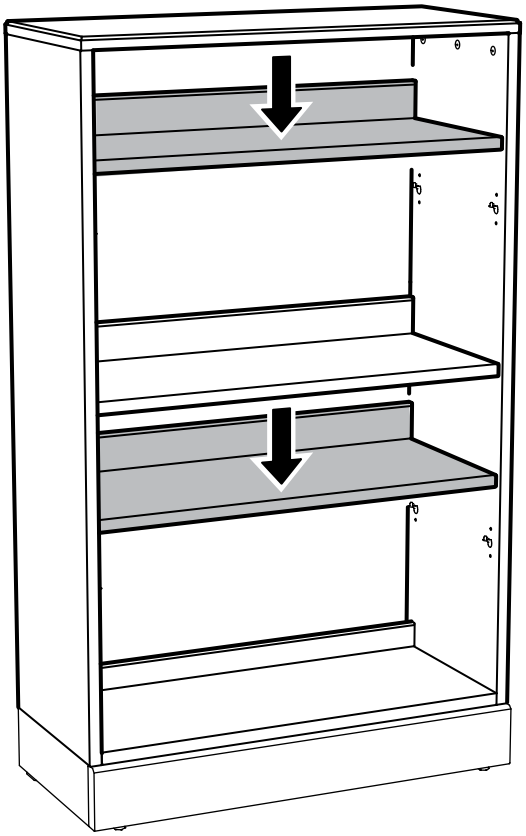

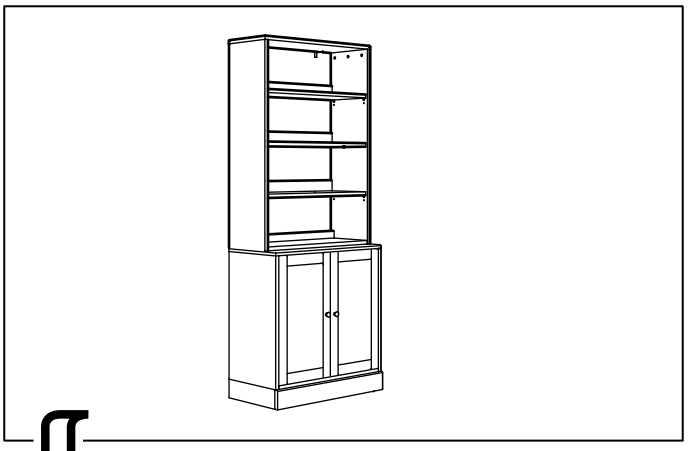

14

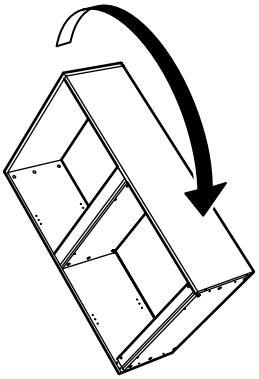

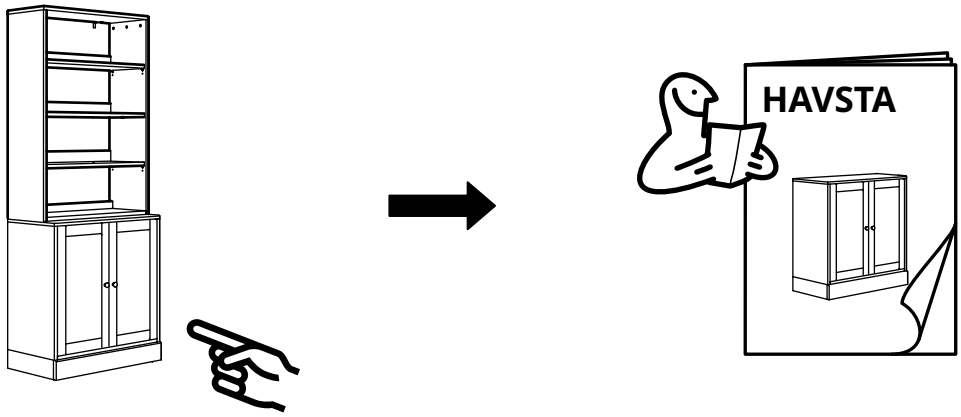

15

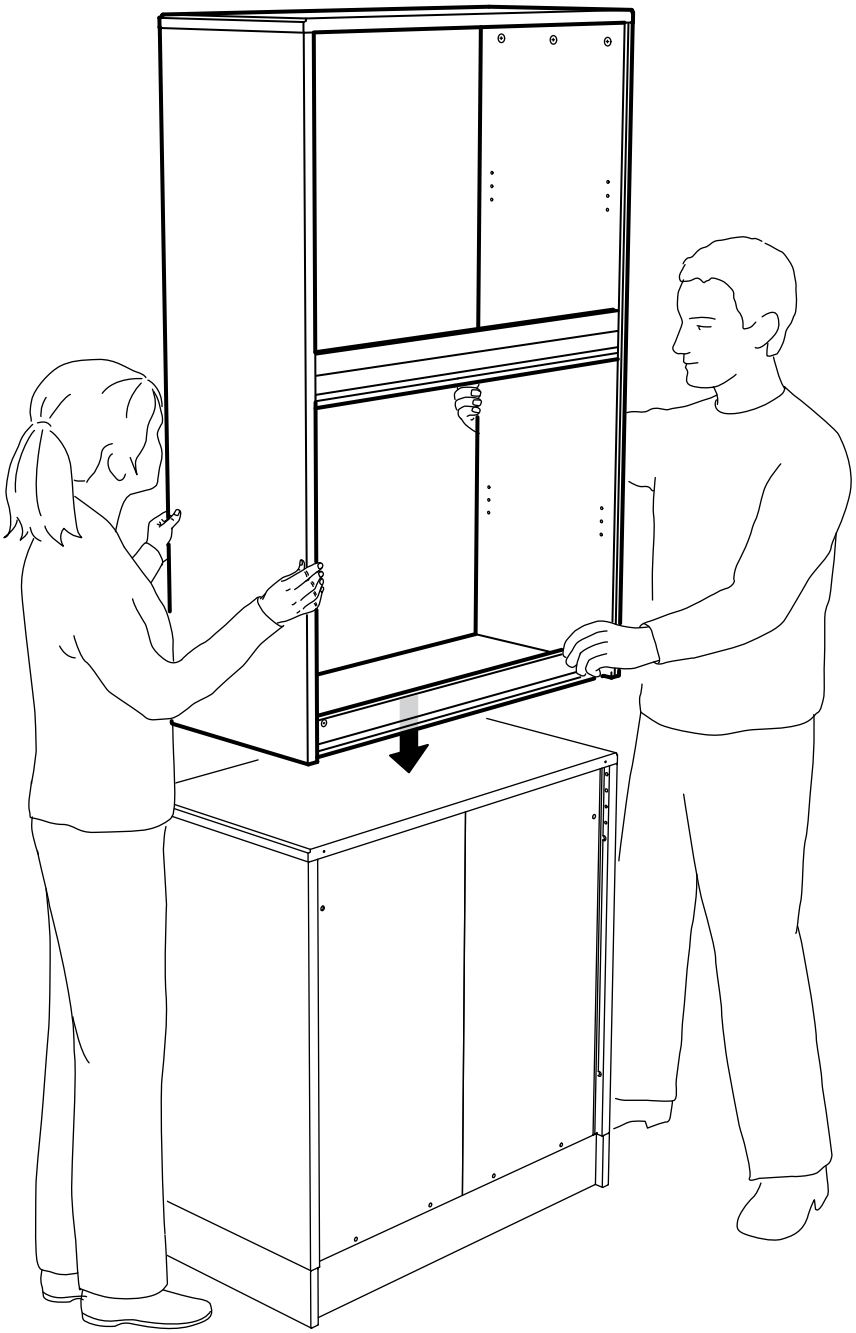

16

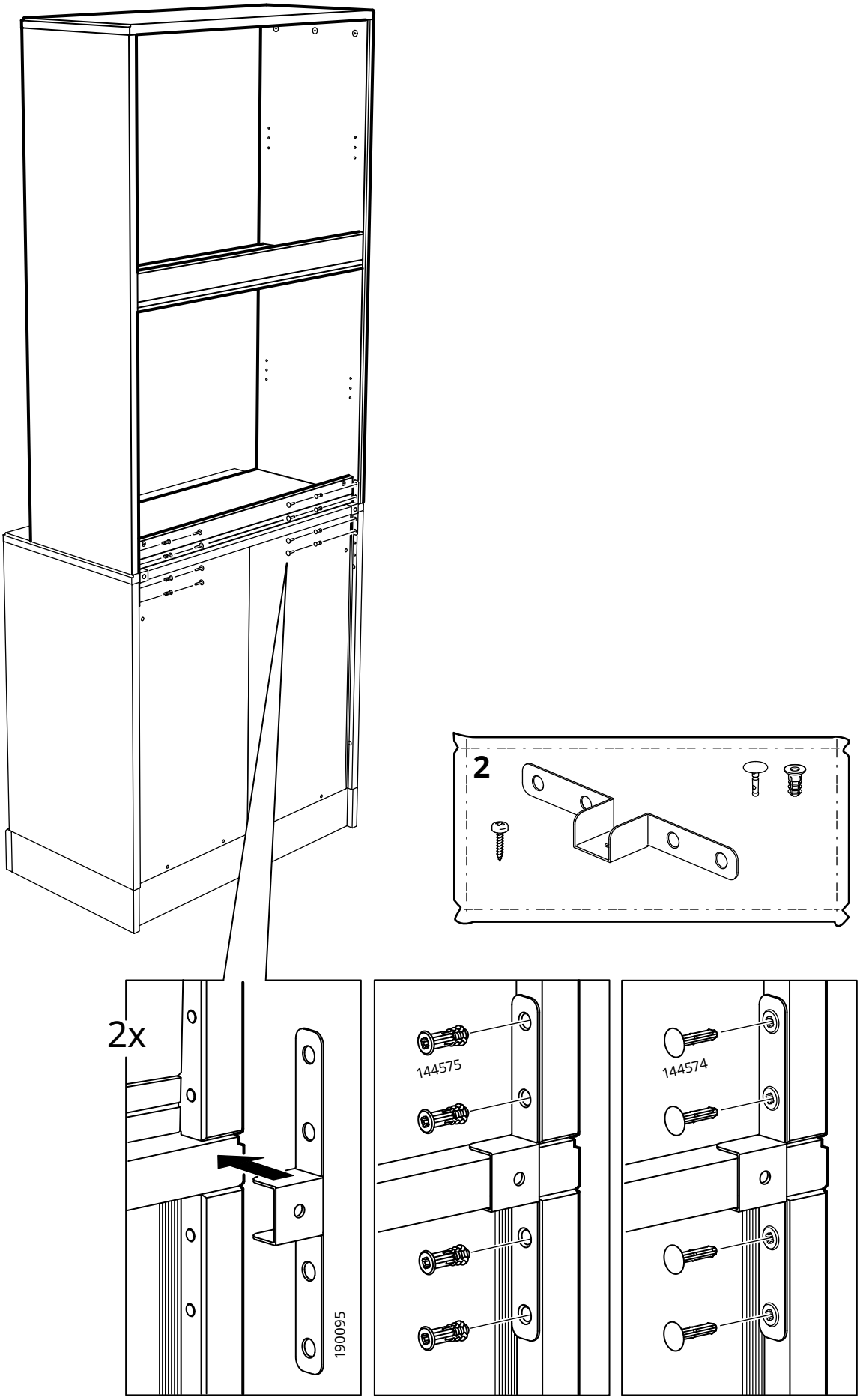

17

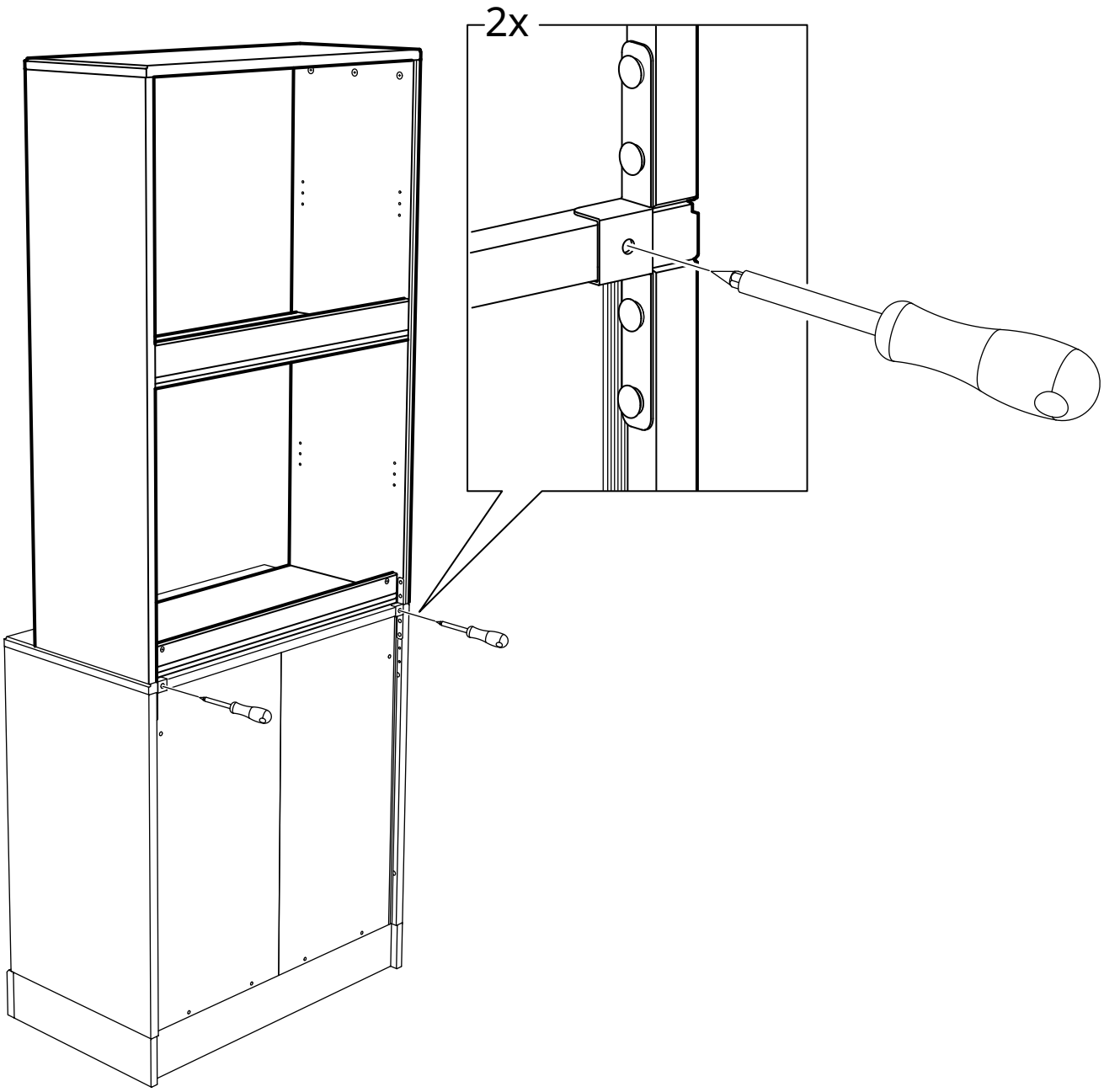

18

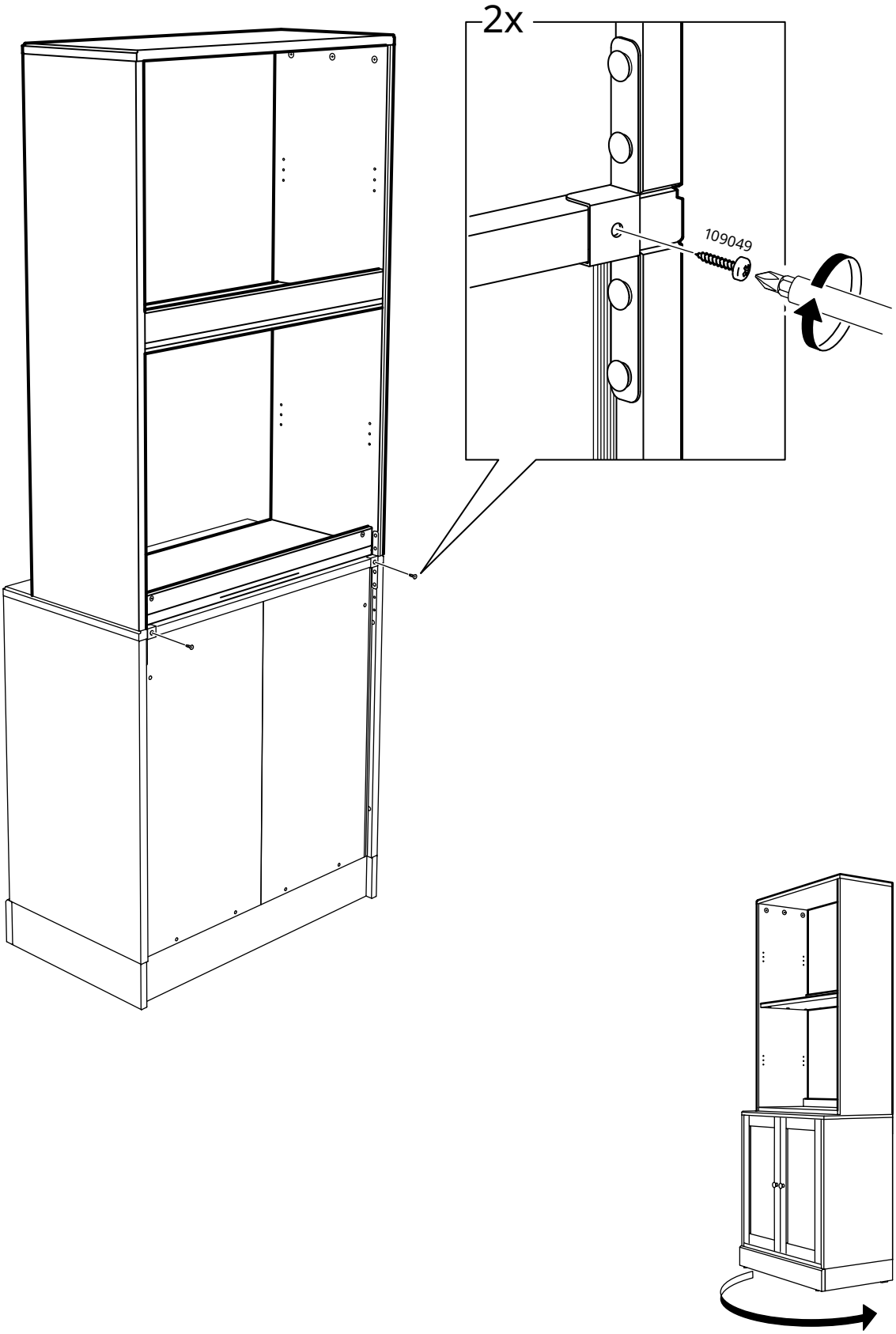

19

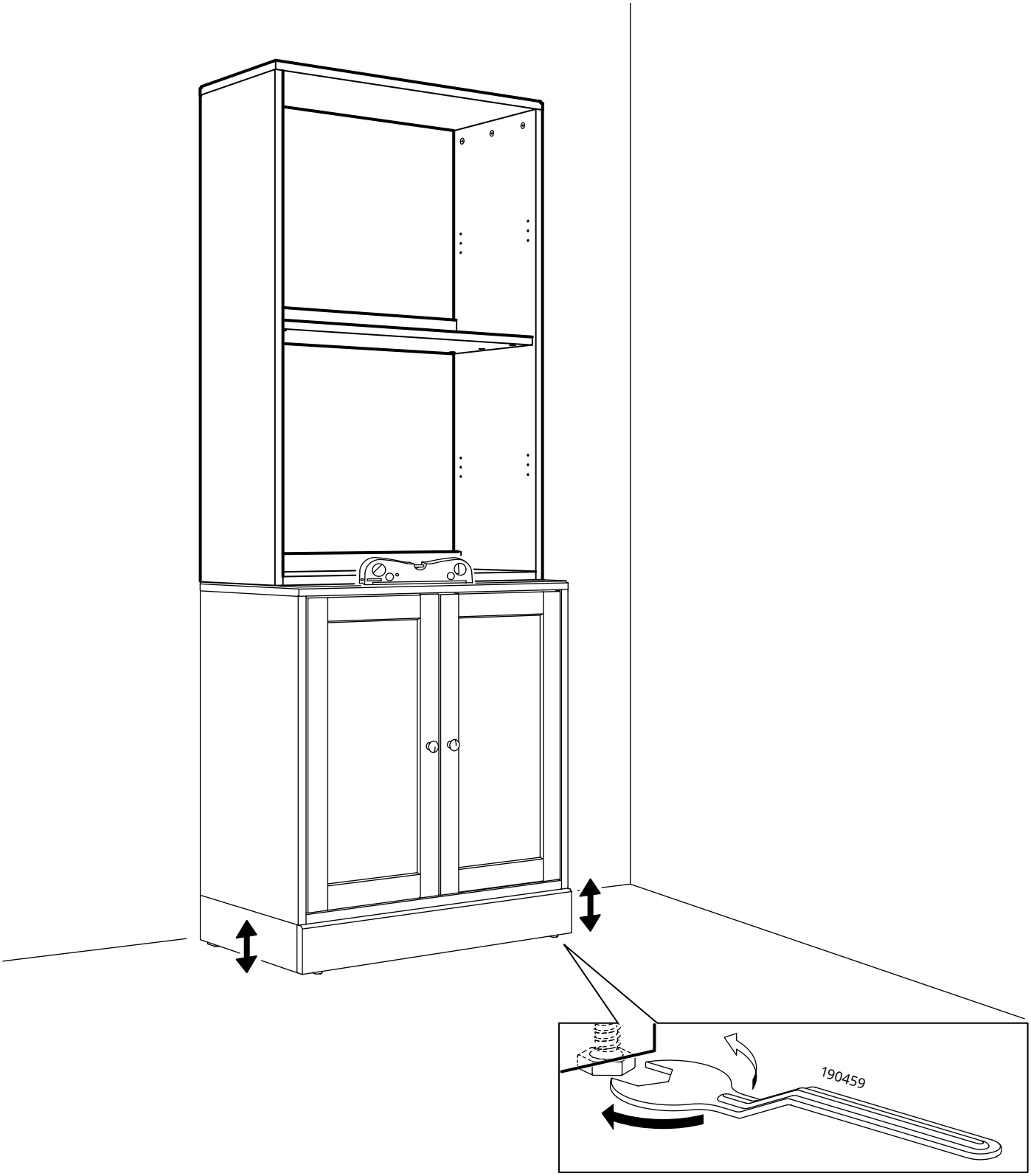

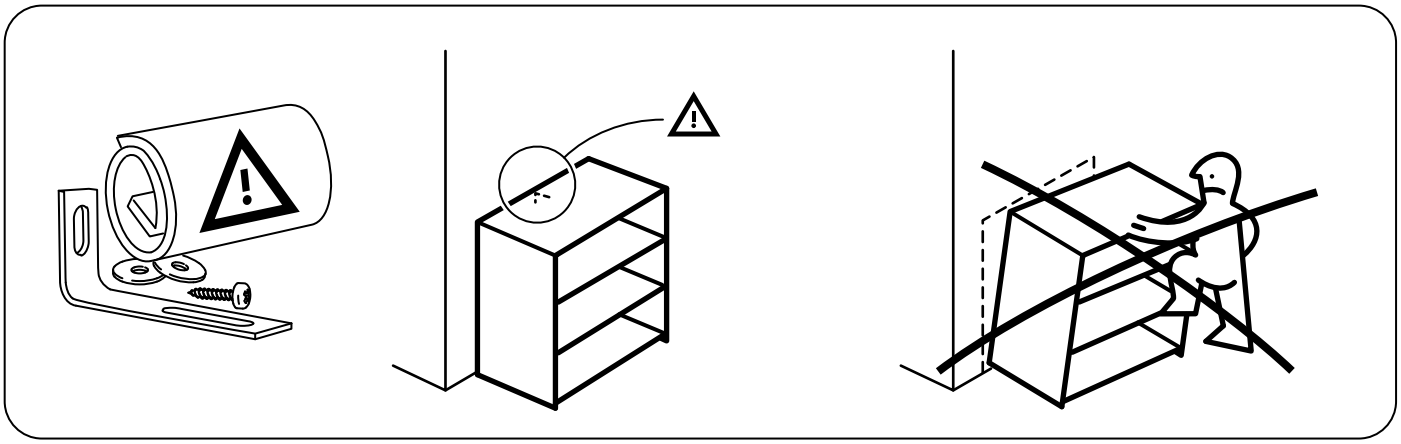

20

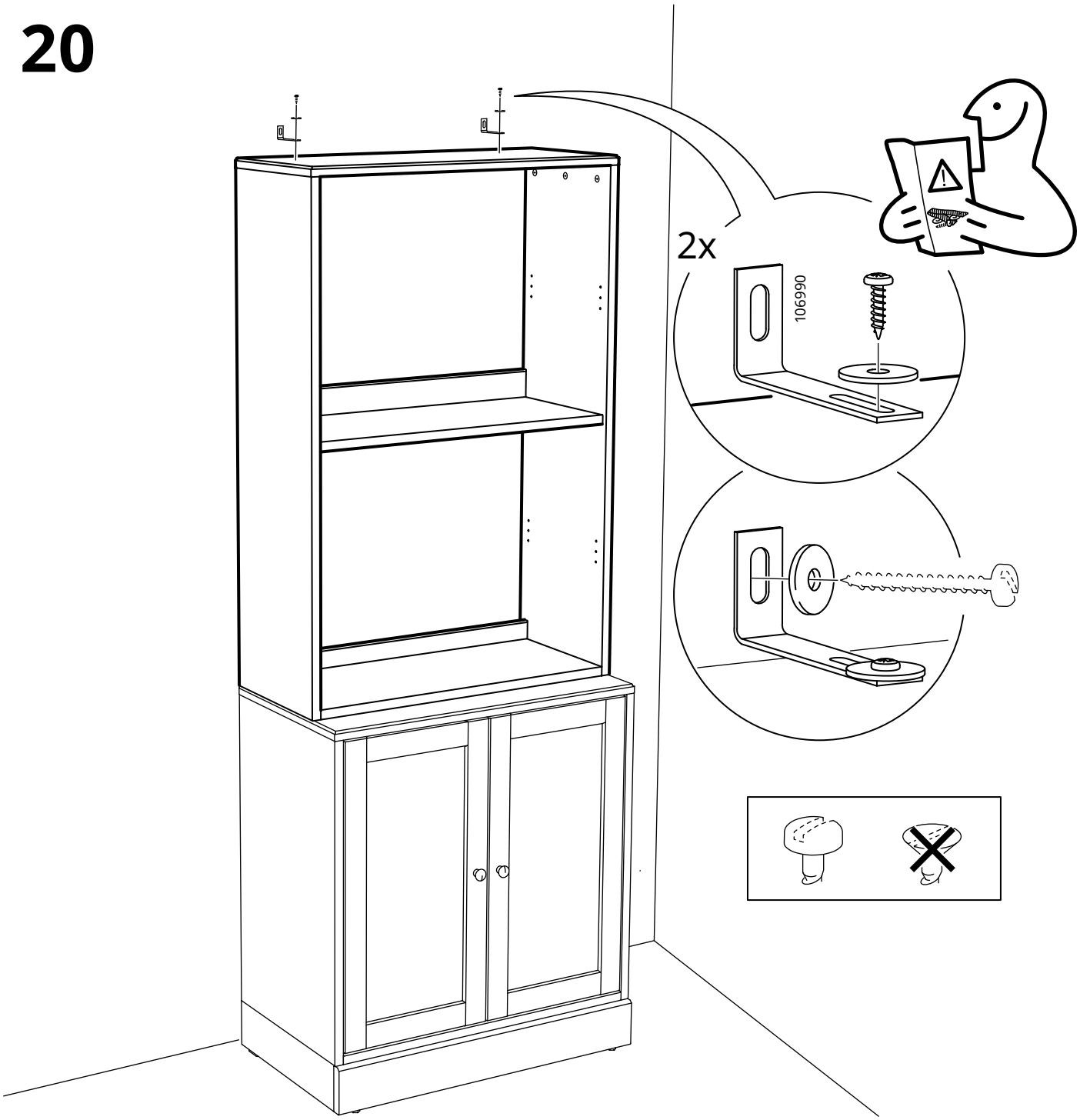

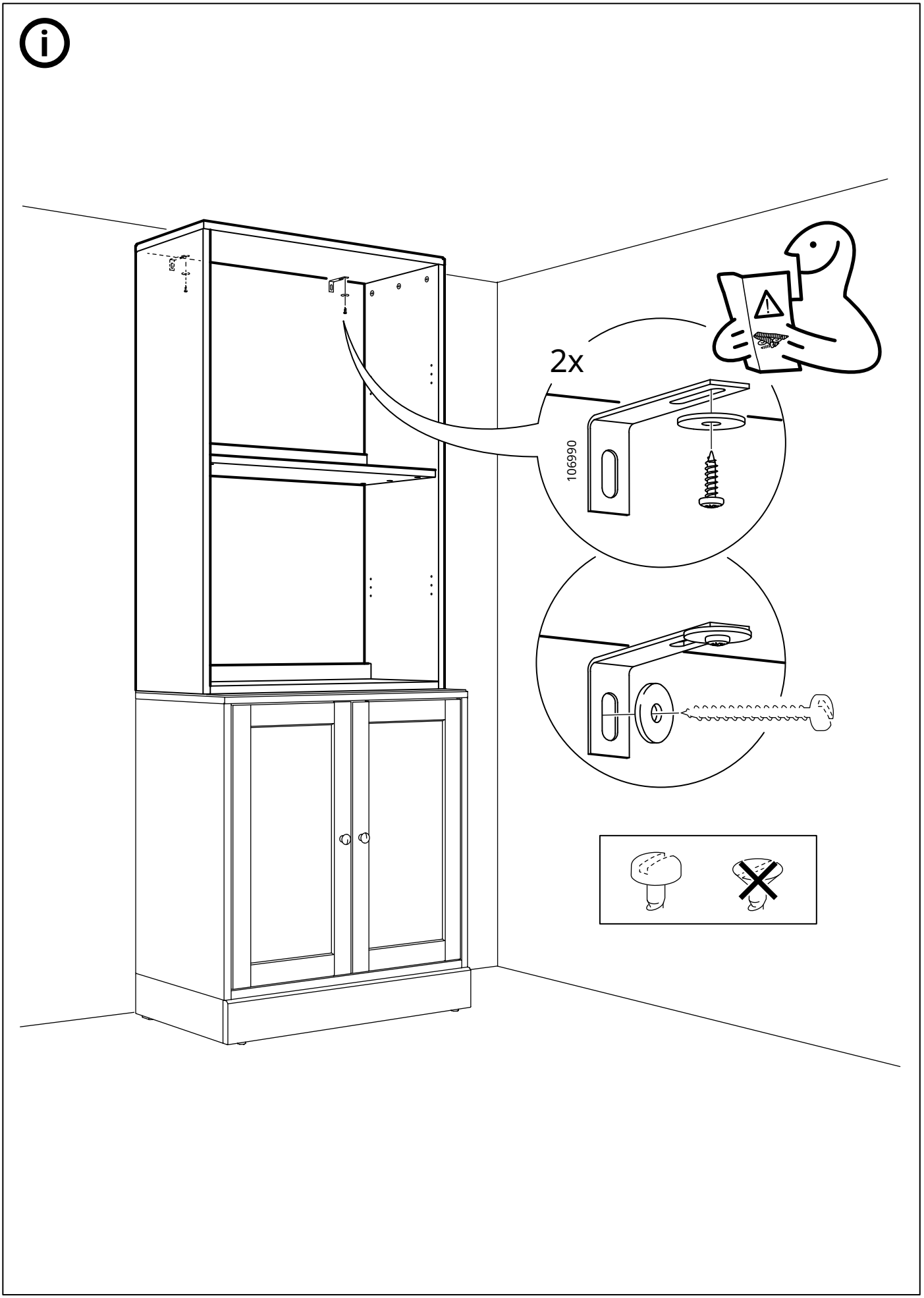
2x
106990

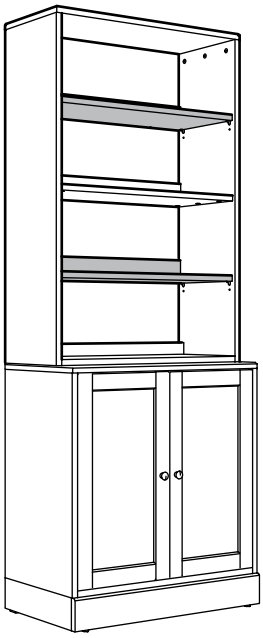

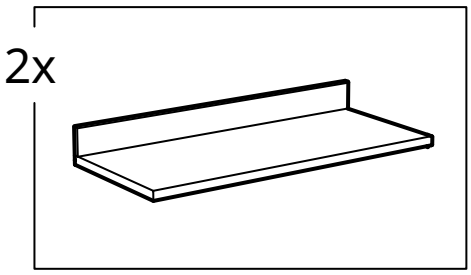

21

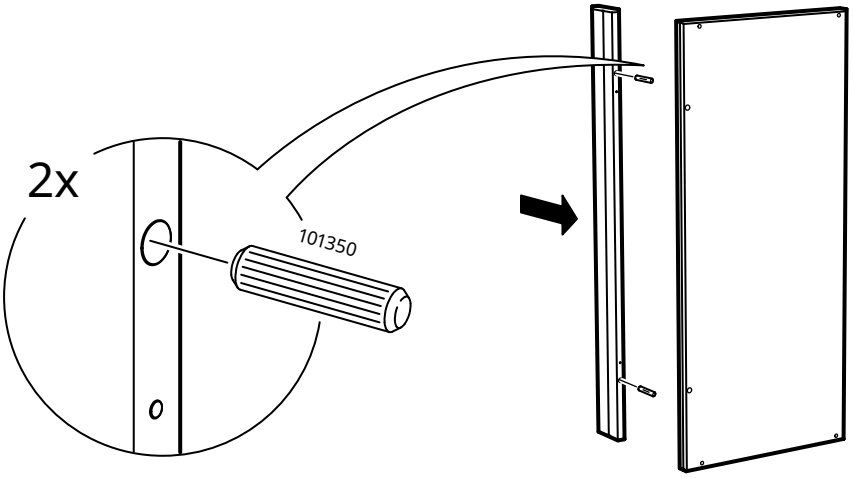

22

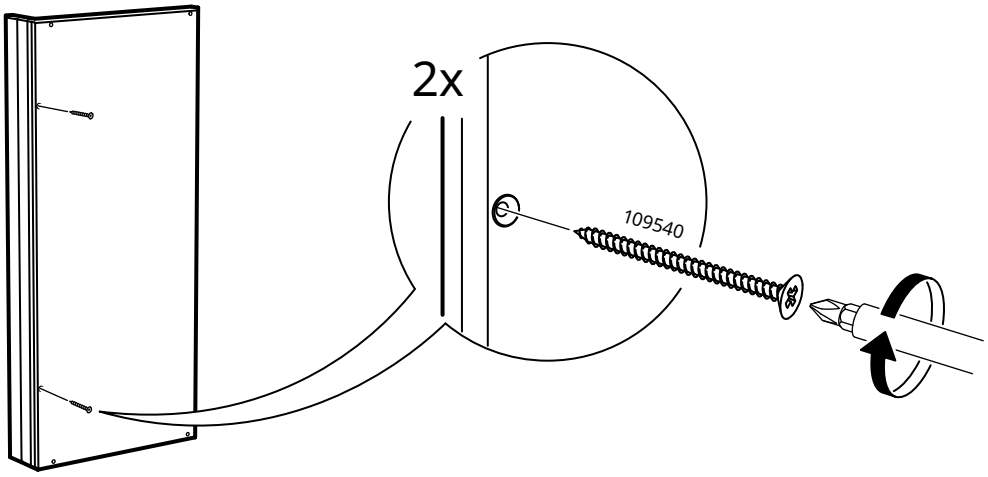

23

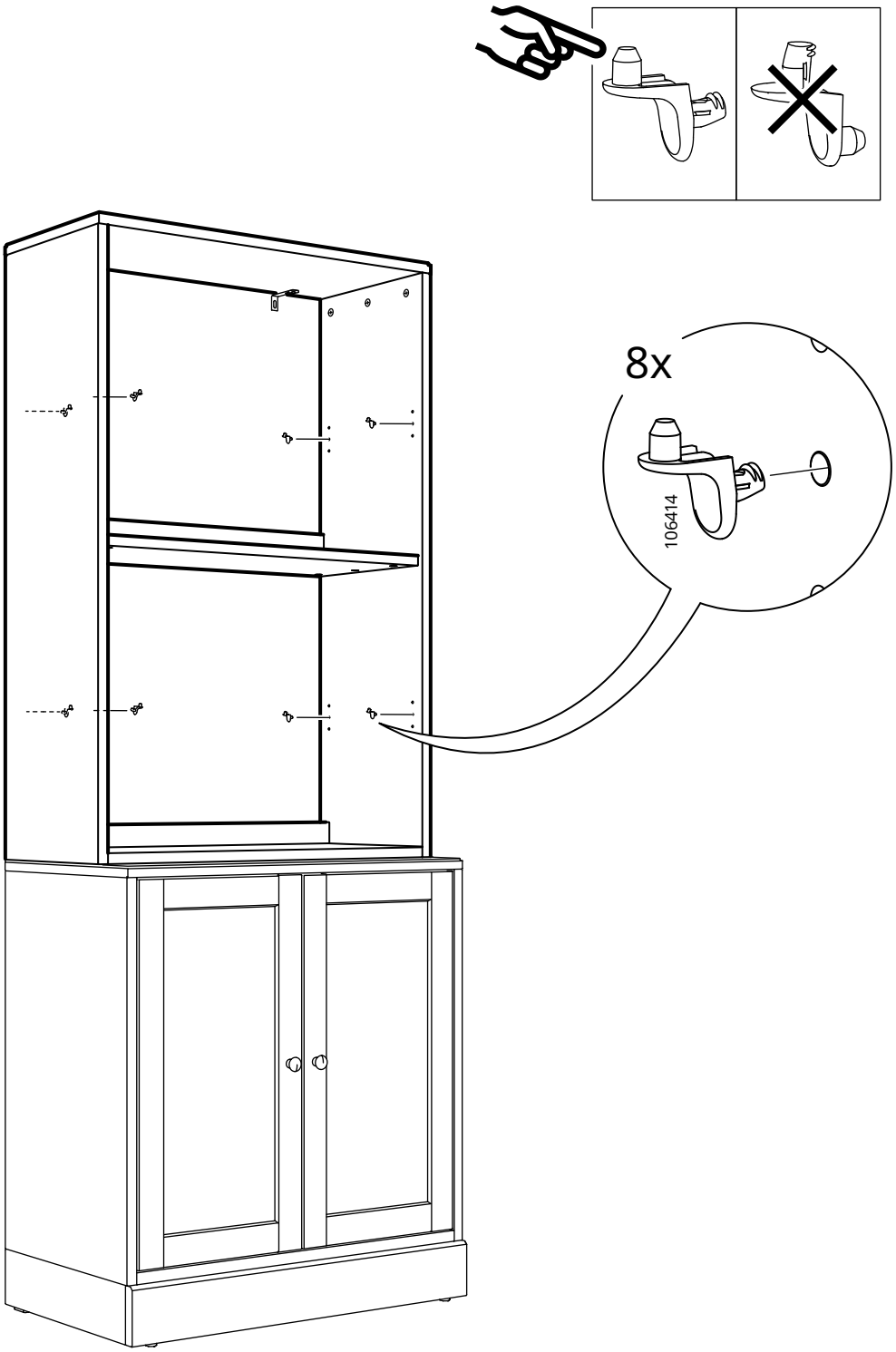
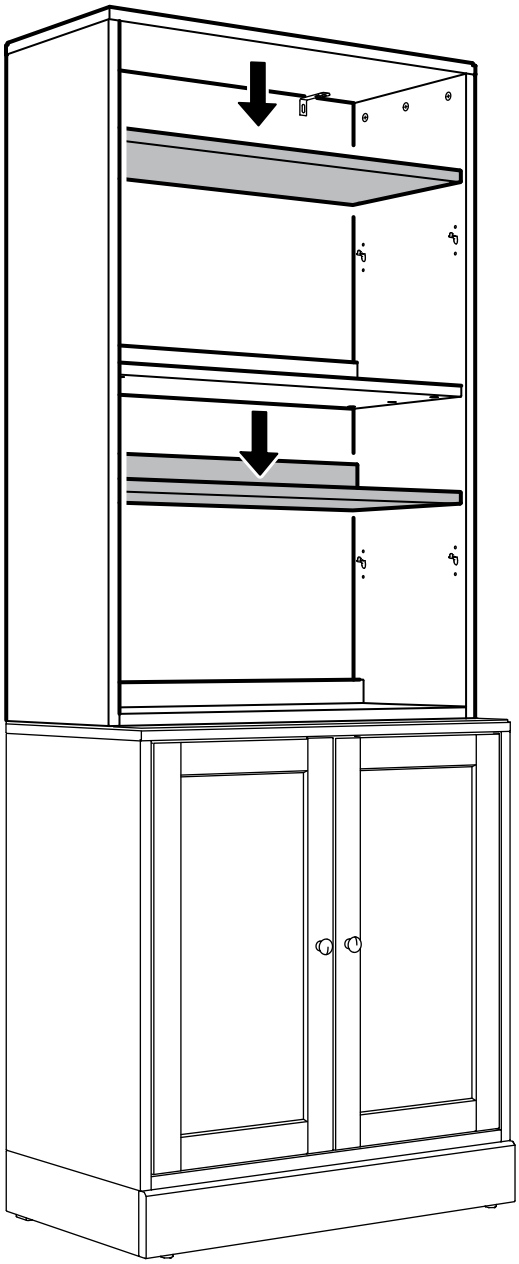
24