LISABO

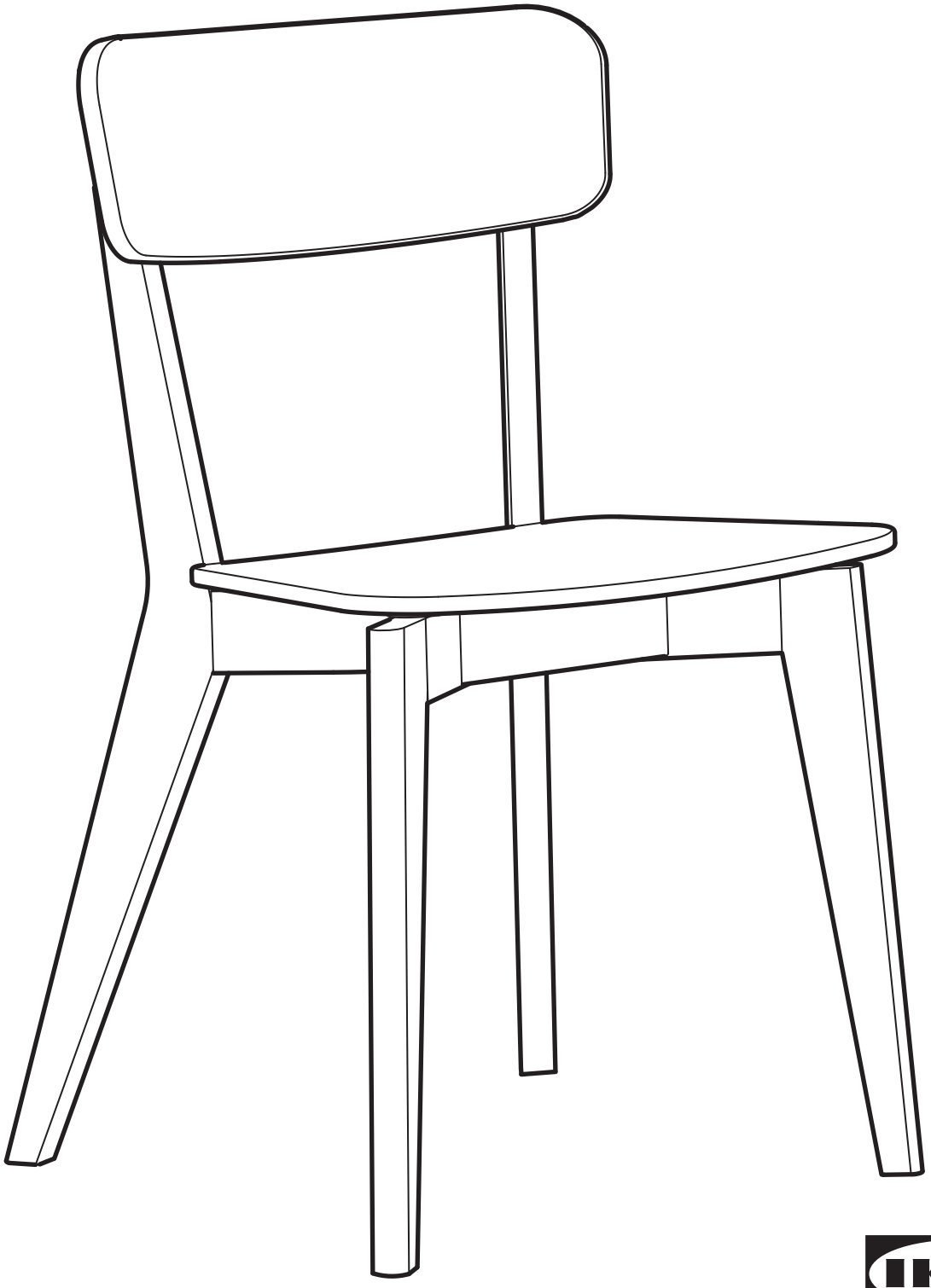

Design and Quality
IKEA of Sweden

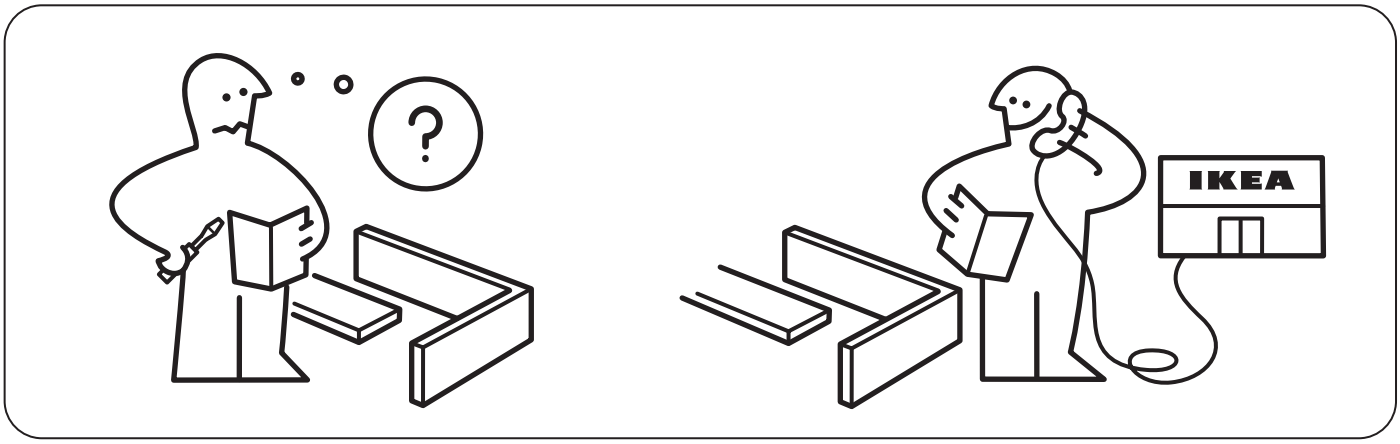

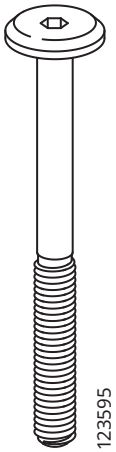
123595

6x

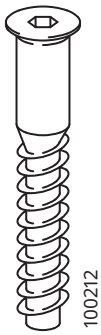
100212
100211

4x

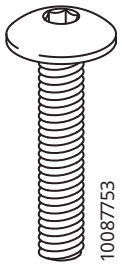
10087753
10087754

4x

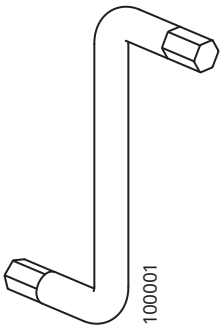
100001

1x

1

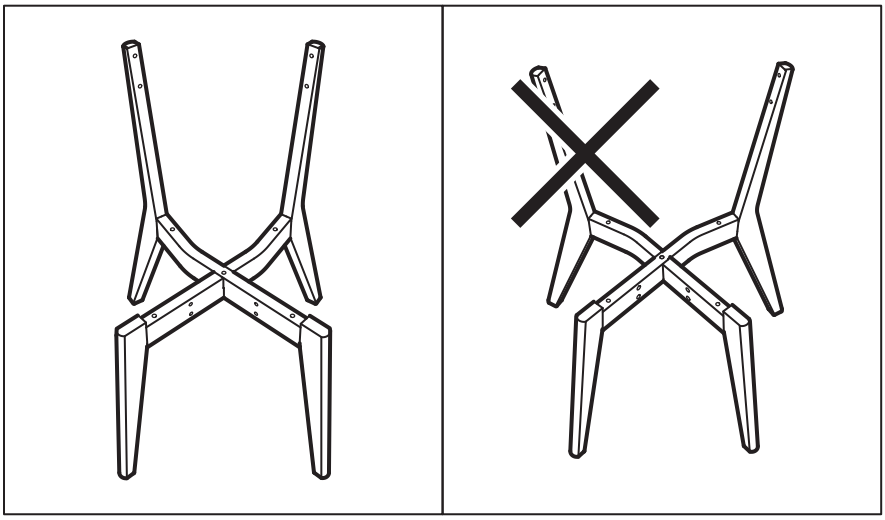

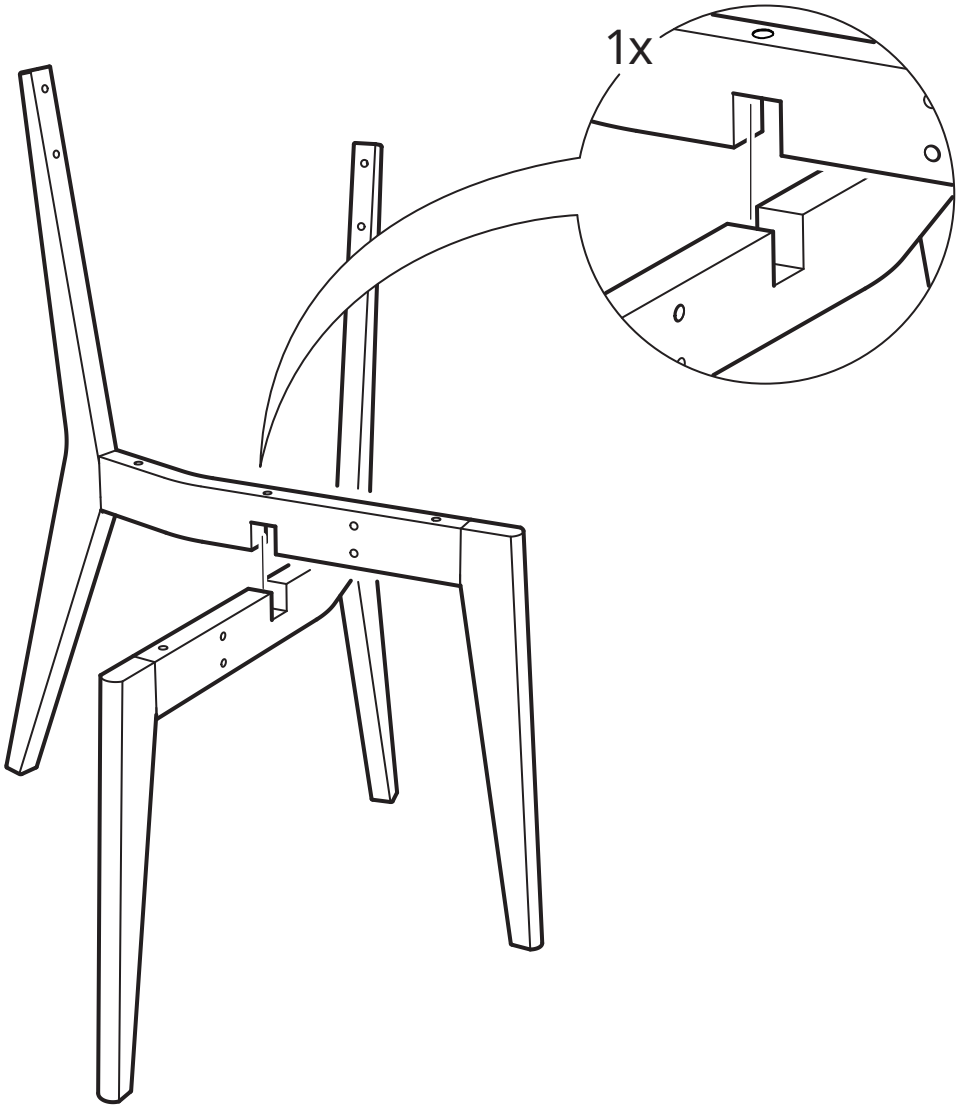

2

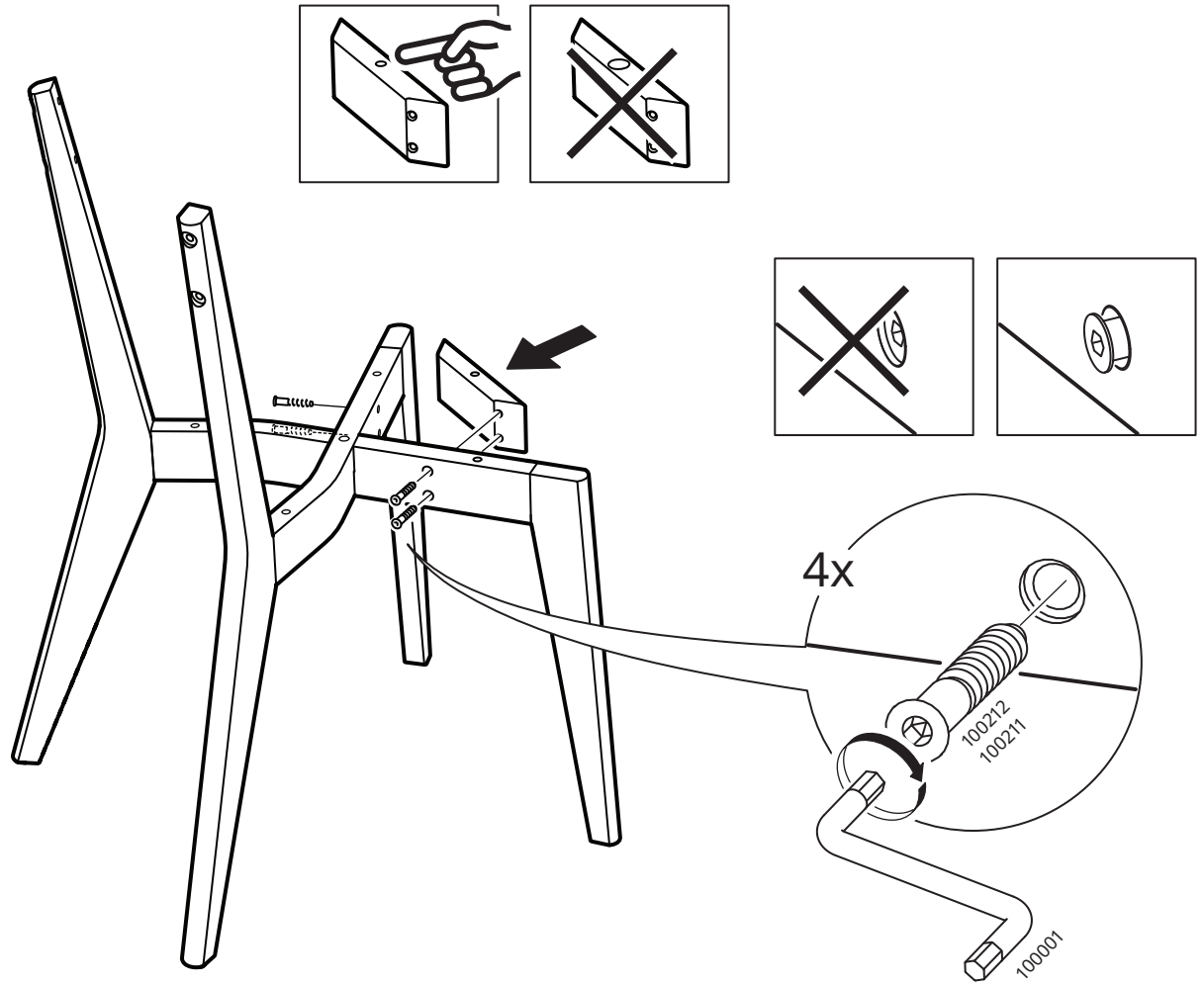

3

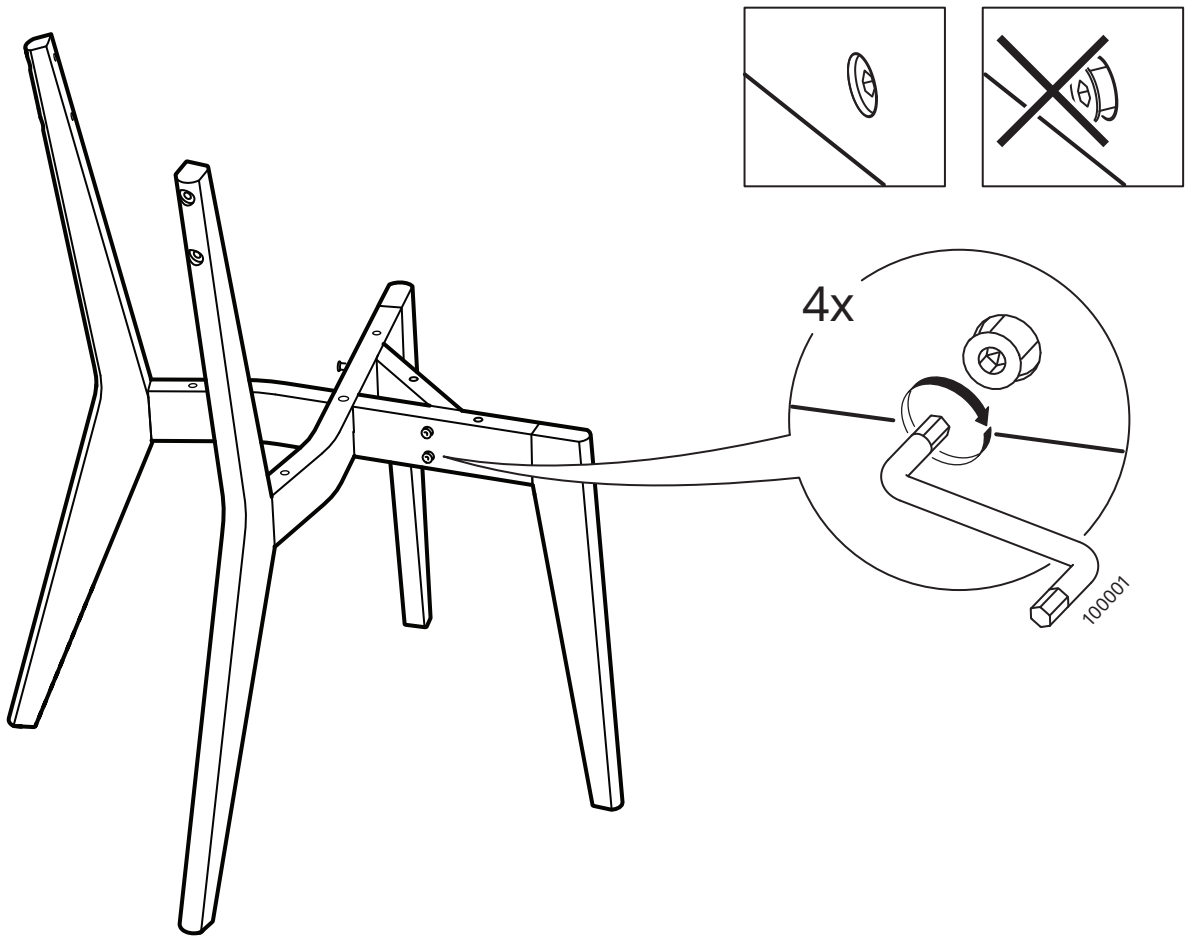

4

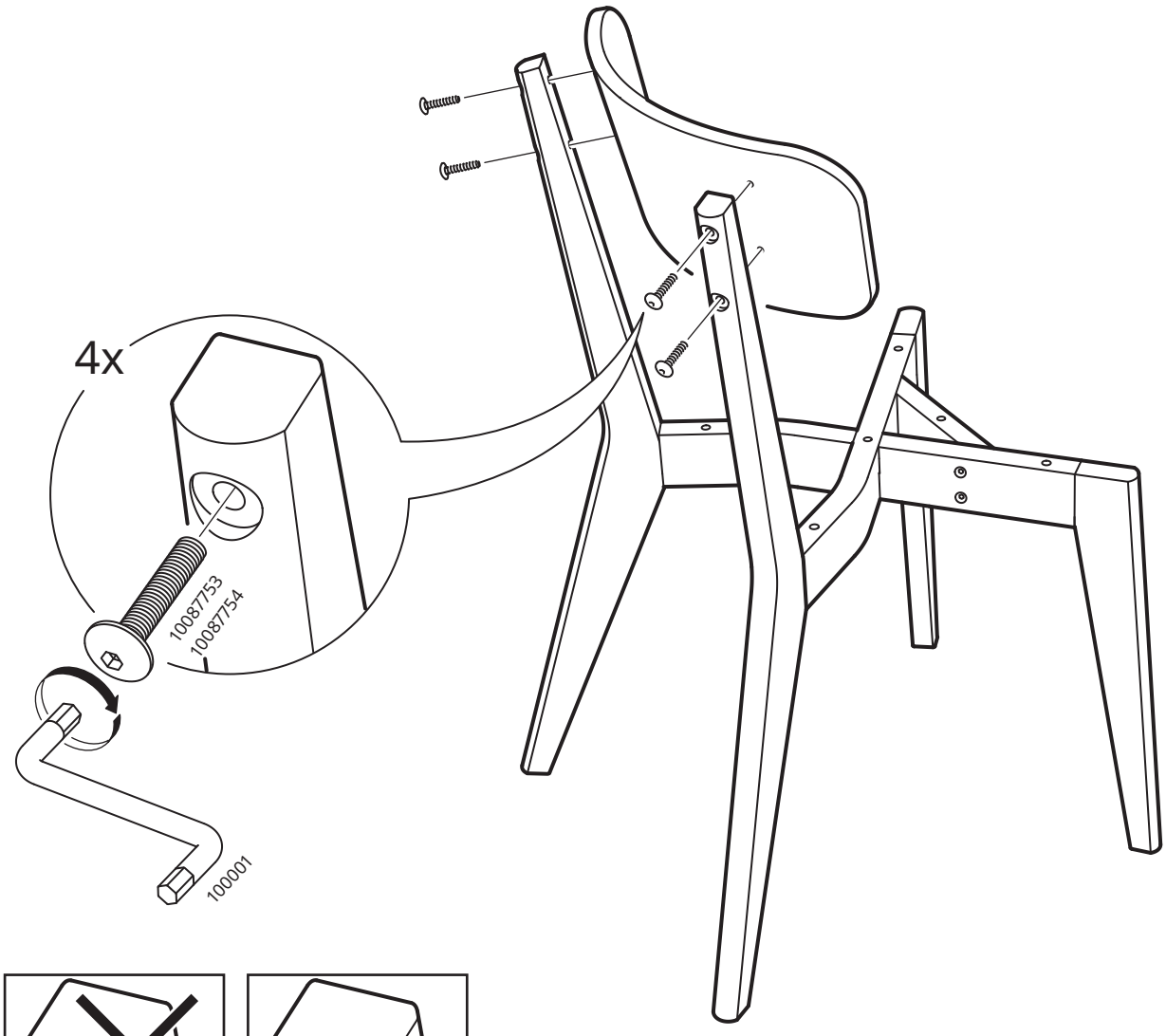

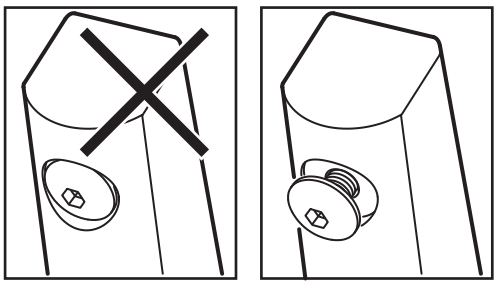

5

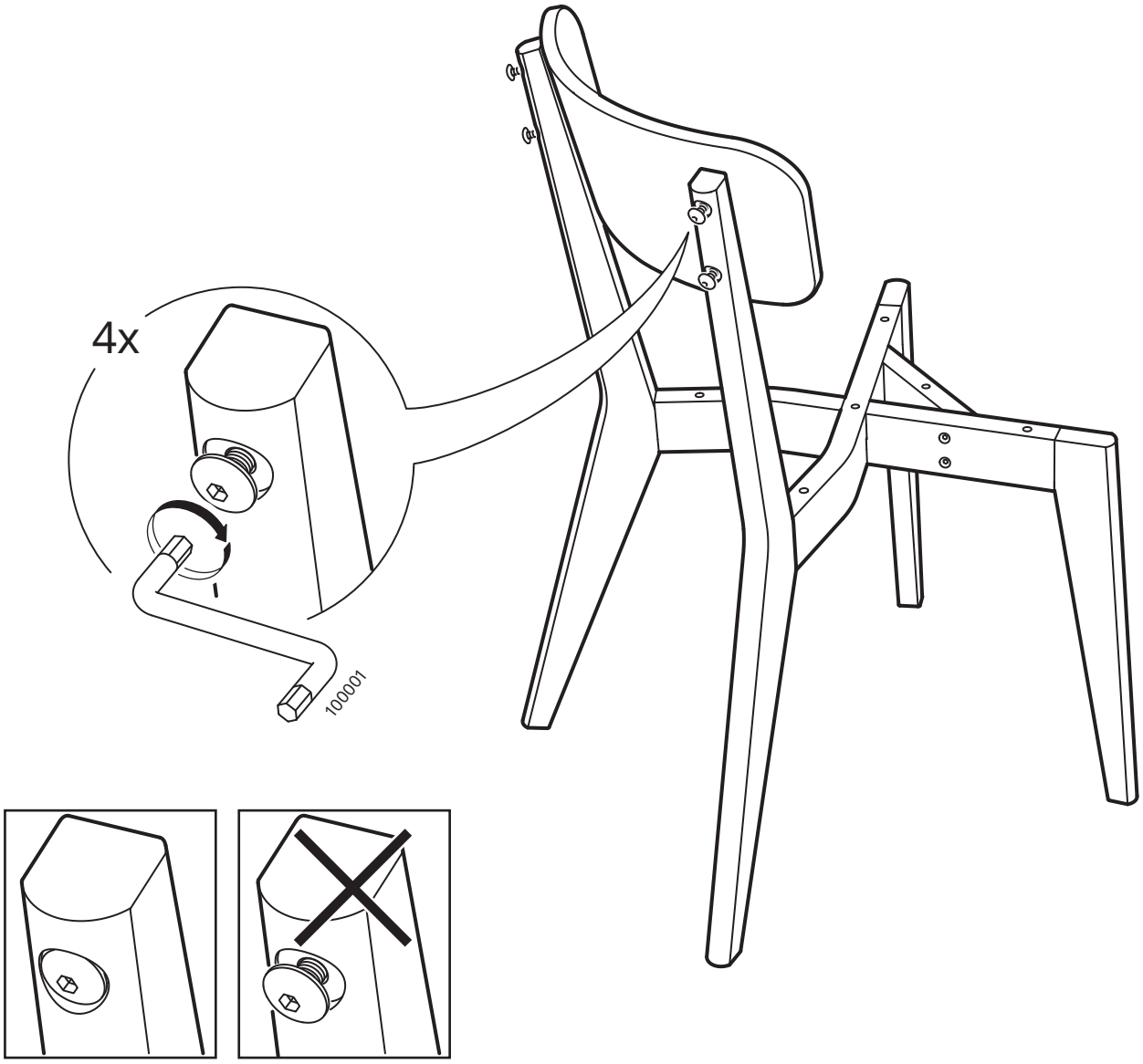

6

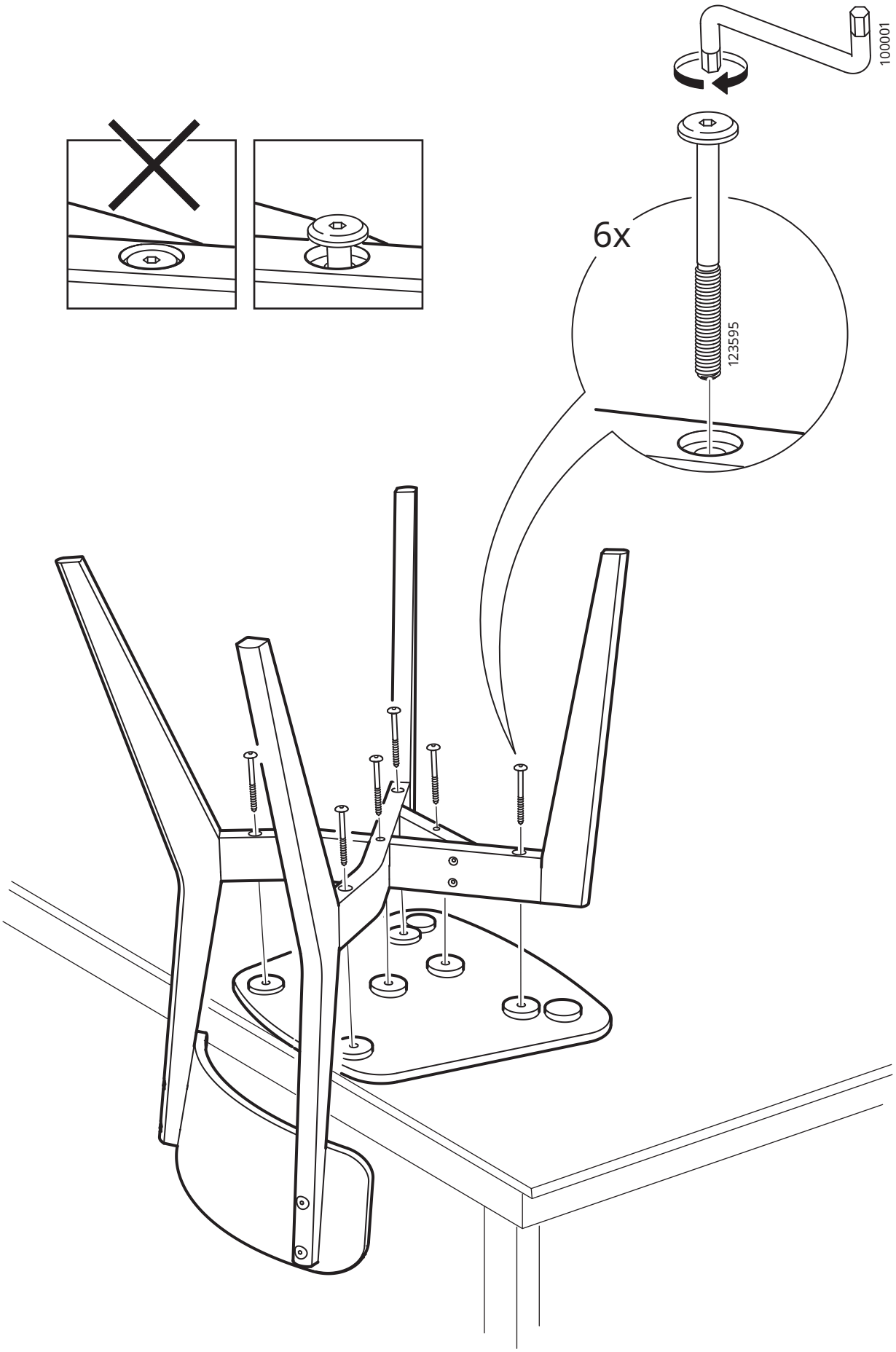

7

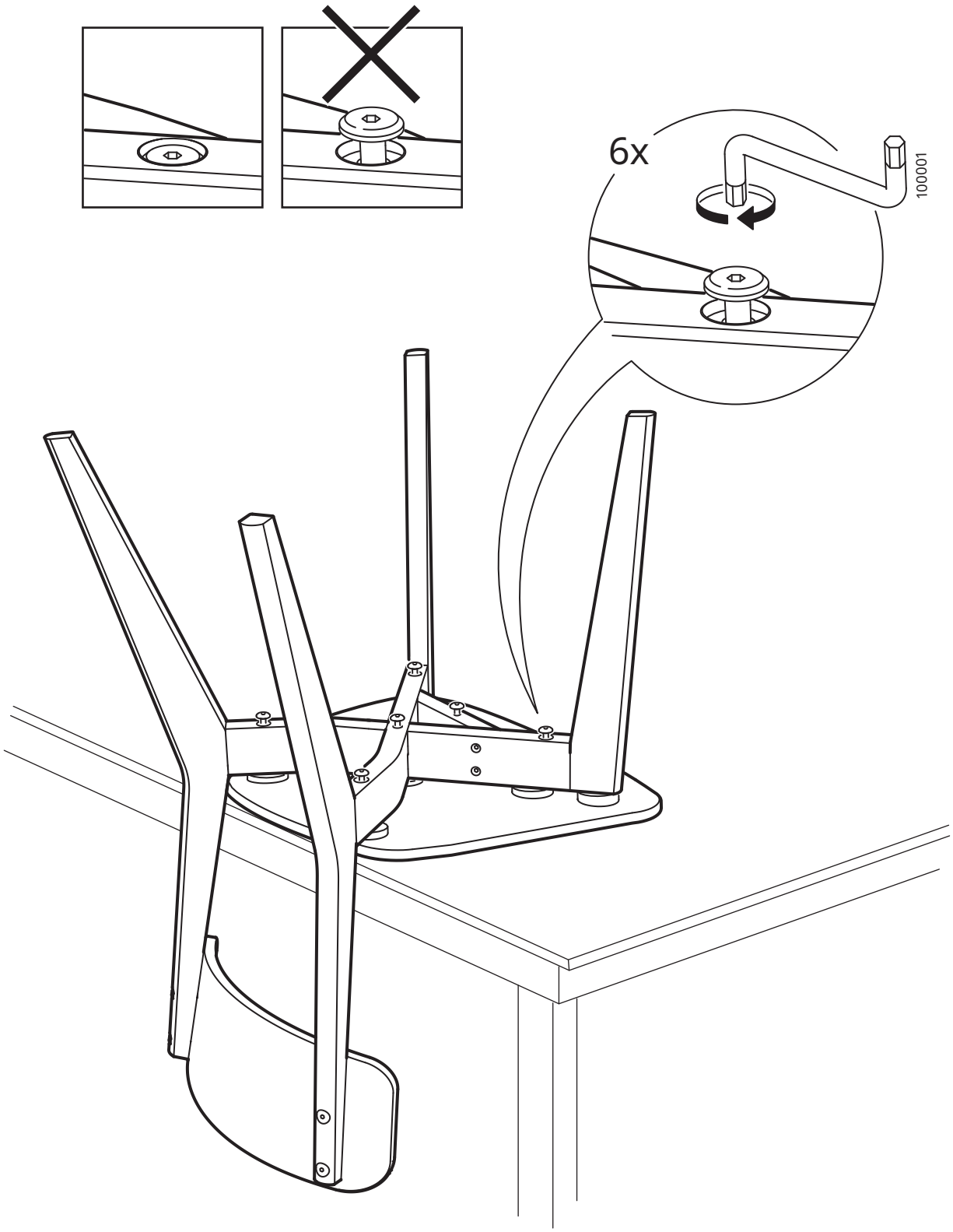

© Inter IKEA Systems B.V. 2019
2026-11-25 AA-2174482-10