ÖVERNÄS

en

Design and Quality
IKEA of Sweden

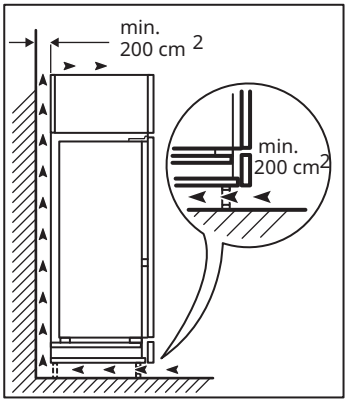
min.
200 cm 2
min.
200 cm2

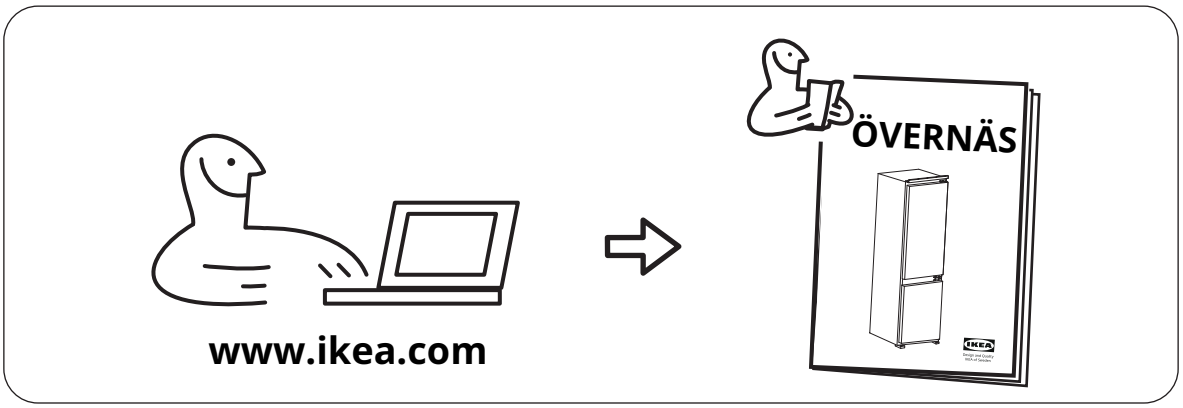
www.ikea.com
ÖVERNÄS
IKEA

Table of contents

Safety information	**5**
Safety instructions	**6**
Product description	**8**
First use	**8**
Operation	**9**
Daily use	**11**
Hints and tips	**12**
Cleaning and maintenance	**13**
Troubleshooting	**14**
Technical data	**15**
Environmental concerns	**16**
IKEA Guarantee	**17**

Safety information

Before the installation and use of the appliance, carefully read the supplied instructions. The manufacturer is not responsible if an incorrect installation or use causes injuries or damages. Always keep the instructions with the appliance for future reference.

Children and vulnerable people safety

WARNING: Risk of fire / Flammable materials

- This appliance can be used by children aged from 8 years and above and persons with reduced physical, sensory or mental capabilities or lack of experience and knowledge if they have been given supervision or instruction concerning use of the appliance in a safe way and understand the hazards involved. Children shall not play with the appliance.
- Cleaning and user maintenance shall not be made by children without supervision. Children should be supervised to ensure that they do not play with the appliance. Children aged from 3 to 8 years are allowed to load and unload refrigerating appliances.
- Very young children (0-3 years) should be kept away from the appliance.
- Young children (3-8 years) should be kept away from the appliance unless continuously supervised.
- Keep all packaging away from children and dispose of it appropriately.

General Safety

- This appliance is intended to be used in household and similar applications such as:
  - staff kitchen areas in shops, offices and other working environments;
  - farm houses and by clients in hotels, motels and other residential type environments;
  - bed and breakfast type environments;
  - catering and similar non-retail applications.
- **WARNING:** Keep ventilation openings, in the appliance enclosure or in the built-in structure, clear of obstruction.
- **WARNING:** Do not use mechanical devices or other means to accelerate the defrosting process, other than those recommended by the manufacturer.
- **WARNING:** Do not damage the refrigerant circuit.
- **WARNING:** Do not use electrical appliances inside the food storage compartments of the appliance, unless they are of the type recommended by the manufacturer.
- **WARNING:** Do not use water spray and steam to clean the appliance.
- **WARNING:** Clean the appliance with a moist soft cloth. Only use neutral detergents. Do not use abrasive products, abrasive cleaning pads, solvents or metal objects.
- **WARNING:** Do not store explosive substances such as aerosol cans with a flammable propellant in this appliance.

- **WARNING:** If the supply cord is damaged, it must be replaced by the manufacturer, its service agent or similarly qualified persons in order to avoid a hazard.
- **WARNING:** When positioning the appliance, ensure the supply cord is not trapped or damaged.
- **WARNING:** Do not locate multiple portable socket-outlets or portable power supplies at the rear of the appliance.
- Opening the door for long periods can cause a significant increase of the temperature in the compartments of the appliance.
- Clean regularly surfaces that can come in contact with food and accessible drainage systems.
- Clean water tanks if they have not been used for 48 hours; flush the water system connected to a water supply if water has not been drawn for 5 days.
- Store raw meat and fish in suitable containers in the refrigerator, so that it is not in contact with or drip onto other food.
- If the refrigerating appliance is left empty for long periods, switch off, defrost, clean, dry, and leave the door open to prevent mould developing within the appliance.
- Two-star frozen-food compartments are suitable for storing pre-frozen food, storing or making ice-cream and making ice cubes.
- One-, two- and three-star compartments are not suitable for the freezing of fresh food.
- **WARNING:** To avoid a hazard due to instability of the appliance, it must be fixed in accordance with the instructions.

Safety instructions

Installation

- The appliance must be handled and installed by two or more persons.
- Installation and maintenance including replacement of the supply cord must be carried out by the manufacturer or a qualified technician, in compliance with the manufacturer's instructions and the local safety regulations in force. In order to avoid a hazard, do not repair or replace any part of the appliance including the supply cord, unless specifically stated in the user manual.
- Remove all the packaging.
- Do not install or use a damaged appliance.
- Follow the installation instructions supplied with the appliance.
- Always take care when moving the appliance as it is heavy. Always use safety gloves and enclosed footwear.
- Be careful not to damage the floors (e.g. parquet) when moving the appliance.
- Make sure the appliance is not near a heat source.
- Install and level the appliance on a floor strong enough to take its weight and in a place suitable for its size and use.
- Make sure the air can circulate around the appliance.
- At first installation or after reversing the door wait at least 4 hours before connecting the appliance to the power supply. This is to allow the oil to flow back into the compressor.
- Before carrying out any operations on the appliance (e.g. reversing the door), remove the plug from the power socket.
- Do not install the appliance where there is direct sunlight.
- Do not install this appliance in areas that are too humid or too cold such as wine cellars.
- Install this appliance at a location where the ambient temperature corresponds to the climate class indicated on the rating plate of the appliance. This ensures the correct operation of the appliance. Explanation of climate classes is as follows:
  - “SN” indicates that this refrigerating appliance is intended to be used at ambient temperatures ranging from 10°C to 32°C.
  - “N” indicates that this refrigerating appliance is intended to be used at ambient temperatures ranging from 16°C to 32°C.
  - “ST” indicates that this refrigerating appliance is intended to be used at ambient temperatures ranging from 16°C to 38°C.
  - “T” indicates that this refrigerating appliance is intended to be used at ambient temperatures ranging from 16°C to 43°C.

Electrical connection

⚠ **WARNING!** Risk of fire and electrical shock.

⚠ **WARNING!** When positioning the appliance, ensure the supply cord is not trapped or

damaged.

⚠ **WARNING!** Do not use multi-plug adapters or extension cables.

- The appliance must be earthed.
- Make sure that the parameters on the rating plate are compatible with the electrical ratings of the mains power supply.
- Always use a correctly installed shockproof socket.
- Make sure not to cause damage to the electrical components (e.g. mains plug, mains cable, compressor). Contact an Authorised Service Centre or an electrician to change the electrical components.
- The mains cable must stay below the level of the mains plug.
- Connect the mains plug to the mains socket only at the end of the installation. Make sure that there is access to the mains plug after the installation.
- Do not pull the mains cable to disconnect the appliance. Always pull the mains plug.
- UK and Ireland only:
  This appliance is fitted with a 13 A mains plug. If it is necessary to change the mains plug fuse, use only a 13 A ASTA (BS 1362) fuse.

Use

⚠ **WARNING!** Risk of injury, burns, electrical shock or fire.

The tubes of the refrigeration circuit contain a small quantity of the environmentally friendly but flammable refrigerant R600a. It does not damage the ozone layer and does not increase the greenhouse effect. If refrigerant escapes, it may injure your eyes or ignite. Do not damage the tubes.

- The surface of the compressor may become hot under normal operation. Do not touch it with hands.
- Do not change the specifications of this appliance.
- Do not put electrical appliances (e.g. ice cream makers) in the appliance unless they are stated applicable by the manufacturer.
- If damage occurs to the refrigerant circuit, make sure that there are no flames and sources of ignition in the room. Ventilate the room.
- Do not let hot items touch the plastic parts of the appliance.
- Do not store bottled drinks in the freezer compartment to prevent burst or other losses.
- Do not store flammable gases or liquids in the appliance.
- Do not put flammable products or items that are wet with flammable products in, near or on the appliance.
- Do not touch the compressor or the condenser. They are hot.
- Do not remove or touch items from the frozen-food compartment if your hands are wet or damp.
- Do not swallow the contents (non-toxic) of the ice packs.
- Do not eat ice cubes or ice lollies immediately after taking them out of the freezer since they may cause cold burns.
- Thawed food should not be put back in the frozen-food compartment.
- Follow the storage instructions on the packaging of frozen food.

Internal lighting

⚠ **WARNING!** Risk of electric shock.

- The bulb used inside the appliance is specifically designed for domestic appliances and is not suitable for general room lighting within the home ((EU) 2019/2020).

Care and cleaning

⚠ **WARNING!** Risk of injury or damage to the appliance.

- Before maintenance, deactivate the appliance and disconnect the mains plug from the mains socket.
- This appliance contains hydrocarbons in the cooling unit. Only a qualified person can do the maintenance and the recharging of the unit.

Service

- To repair the appliance, contact an Authorised Service Centre listed at the end of this booklet.
- Use original spare parts only.

Disposal

⚠ **WARNING!** Risk of injury or suffocation.

- Disconnect the appliance from the mains supply.
- Cut off the mains cable and discard it.
- Remove the doors to prevent children and pets to be closed inside the appliance.
- The refrigerant circuit and the insulation materials of this appliance are ozone-friendly.
- The insulation foam contains flammable gas. Contact your municipal authority for information on how to discard the appliance correctly.
- Do not cause damage to the part of the cooling unit that is near the heat exchanger.

The manufacturer declines any liability for injury to persons or animals or damage to property if the above advice and precautions are not respected.

Product description

Product overview

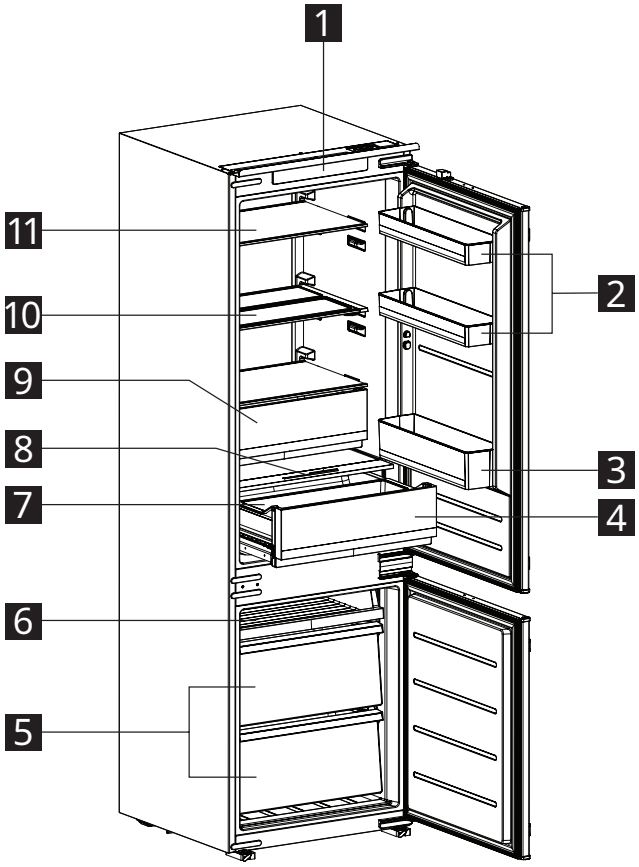

1 Control panel
2 Door balconies
3 Bottle balcony
4 Vegetable drawer
5 Freezer drawers
6 Freezer tray
7 Sliding tray
8 Humidity slider
9 Low temperature drawer
10 Extendable glass shelf
11 Glass shelf

First use

Connect the appliance to the power supply. The ideal food storage temperatures are already factory-set (intermediate).

Important!

This appliance is sold in France.
In accordance with regulations valid in this country it must be provided with a special device (see figure) placed in the lower compartment of the fridge to indicate the coldest zone of it.

Note: After being switched on, the appliance needs 4-5 hours in order to reach the correct temperature to store a typical volume of food.

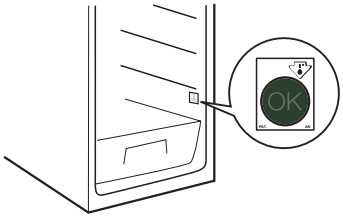

Picture for reference only

Operation

Control panel

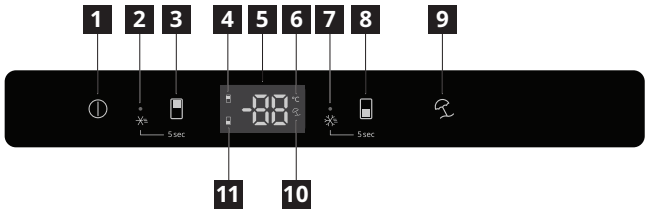

1 On/Off button
2 Super cooling mode indicator
3 Refrigerator temperature button
4 Refrigerator indicator
5 LCD screen
6 Temperature unit indicator
7 Super freezing mode indicator
8 Freezer temperature button
9 Vacation mode button
10 Vacation mode indicator
11 Freezer indicator

Note: Do not use sharp objects to operate the control panel. They can scratch or damage the control panel.

Switching on

When you connect the mains plug to a power socket, the appliance switches on, emits a ring and starts operating using the default or last used settings.

Switching off

- To switch off the appliance, tap and hold the On/Off button (⏻) for 10 seconds. The appliance turns off the control panel and stops operating. **Note**: When the appliance is off, all control panel buttons except the On/Off button (⏻) are disabled. If you tap a disabled button, the appliance emits a ring.
- To switch the appliance back on, tap and hold the On/Off button (⏻) for 10 seconds. The appliance turns on the control panel and resumes its operation.
- To disconnect the appliance from the power supply, disconnect the mains plug from the power socket.

Display

- After you plug in the appliance, the entire LCD screen and all indicators will light up for 3 seconds. Then the screen starts showing the set temperature for the refrigerator compartment in °C.
- To view the set temperature for the freezer compartment, tap the Freezer temperature button (▟). The Freezer indicator (▟) lights up.
- To view the set temperature for the refrigerator compartment again, tap the Refrigerator temperature button (▟). The Refrigerator indicator (▟) lights up.
- If the door is closed and you do not tap any button, the LCD screen and all relevant indicators will turn off in 15 seconds. To turn them back on, tap any button or open the door.
- In case of a known failure, the appliance shows one of the following error codes on the LCD screen and beeps. To stop the beeping, tap any button.

Error code	Fault
E1	Refrigerator temperature sensor failure
E2	Freezer temperature sensor failure
E5	Freezer defrosting temperature sensor failure
E7	Ambient temperature sensor failure
E6	Internal communication failure

Note: If you see one of these error codes, contact an Authorised Service Centre for advice.

Setting the temperatures

Recommended temperatures
Refrigerator compartment: +5°C (factory setting)
Freezer compartment: –20°C (factory setting)

When you plug in the appliance for the first time, it sets the temperatures to the factory default temperatures. When you plug in or switch on the appliance again, it sets the temperatures to the last set temperatures unless its memory function is off.

- To adjust the refrigerator temperature, tap the Refrigerator temperature button (▟) to cycle through the available temperatures (2°C to 8°C) until your desired temperature appears on the screen.
  The Refrigerator indicator (▟) blinks during the adjustment and stops blinking when the set temperature takes effect.

- To adjust the freezer temperature, tap the Freezer temperature button (▟) to cycle through the available temperatures (-24°C to -16°C) until your desired temperature appears on the screen.
  The Freezer indicator (▟) blinks during the adjustment and stops blinking when the set temperature takes effect.

Tips:
- You cannot adjust the refrigerator and freezer temperatures when the appliance is in vacation mode.
- The lower the set temperature, the longer you can safely store your food and the more electricity the appliance consumes.
- The higher the set temperature, the quicker your stored food decays and the less electricity the appliance consumes.

Super cooling mode

Note: The Super cooling function is specifically designed to rapidly cool down newly placed food in the fridge compartment. If you have a significant amount of warm food, such as after grocery shopping, it is recommended to activate the Super cooling function. By doing so, you can ensure quick cooling of the products and reduce the temperature rise, thereby effectively prolonging the preservation of all the other food items inside.
- To put the appliance into super cooling mode, tap and hold the Refrigerator temperature button ( ) for 5 seconds. The Super cooling mode indicator ( ) blinks and the appliance displays 2°C on the screen. This mode will take effect when this indicator stops blinking.
- The appliance will automatically exit super cooling mode after being in this mode for 6 hours or when the refrigerator temperature reaches 2°C. To exit this mode earlier, tap the Refrigerator temperature button ( ).

Super freezing mode

Note: The super freezing function is designed to maintain the nutritional value of food in the freezer compartment. It can freeze the food in the shortest time. If a large amount of food is frozen at one time or the food needs to be frozen quickly, it is recommended to turn on the super freezing function and put the food in. At this time, freezing speed of freezer compartment will be increased. Energy consumption increases while the function is ON.
- To put the appliance into super freezing mode, tap and hold the Freezer temperature button ( ) for 5 seconds. The Super freezing mode indicator ( ) blinks and the appliance displays -24°C on the screen. This mode will take effect when this indicator stops blinking.
- The appliance will automatically exit super freezing mode after being in this mode for 40 hours. To exit this mode earlier, tap the Freezer temperature button ( ).

Vacation mode

Before leaving the appliance unused for a long time, you can put it into vacation mode to save energy.
In vacation mode, the appliance does not cool the refrigerator compartment and keeps the freezer compartment at a temperature of -20°C.

Notes:
- Do not store any food in the refrigerator compartment when the appliance is in vacation mode. Leave the refrigerator door open just enough to allow air to circulate inside the compartment. This will prevent the formation of mould and unpleasant odours.
- Both the Refrigerator temperature button ( ) and Freezer temperature button ( ) are disabled when the appliance is in vacation mode.

- To put the appliance into vacation mode, tap and hold the Vacation mode button ( ) for 3 seconds. The Vacation mode indicator ( ) blinks and the appliance displays -20°C on the screen. This mode will take effect when this indicator stops blinking.
- To exit vacation mode, tap and hold the Vacation mode button ( ) for 3 seconds. The Vacation mode indicator ( ) turns off.

Memory function

The appliance has a memory function that is on in most cases. If you switch off or unplug the appliance, or in case of a power outage, it will resume its operation using the last used settings after switching on again.
Similarly, after the appliance exits super cooling, super freezing or vacation mode, it will continue to operate using the settings used before entering that mode.

Notes:
- The appliance will not remember the elapsed time for super cooling or super freezing mode. So, for instance, if it returns to super cooling mode after switching on again, it will always run this mode for 6 hours before exiting automatically.
- The appliance will turn on its memory function only after it has operated continuously for more than 30 minutes. So, if you switch it off after it has operated continuously for less than 30 minutes, it will not remember the last used settings.

Door opening and closing

- The LED light inside the refrigerator compartment turns on when the refrigerator door opens and turns off when the door closes.
- The LCD screen and all relevant indicators turn on when the refrigerator door opens and turn off 15 seconds after the door closes.

Door opening alarm

- If the refrigerator door remains open for more than 120 seconds, the door opening alarm will go off. To stop the alarm, close the open door or tap any button.
- If you stop the alarm by tapping a button and keep the door open, the alarm will go off again after another 120 seconds. If you keep the door open for over 15 minutes, the appliance will turn off the

alarm and LED light, and continue operating as usual.

- **Note**: The door opening alarm is disabled when the appliance is in vacation mode.

Daily use

Low temperature drawer

- The low temperature drawer is the coldest zone in the refrigerator compartment. It maintains a temperature that is 1 or 2°C lower than the set temperature.
- Store perishable foods such as fish, sausages and meat in this drawer, so that they will stay fresh longer. **Note:** Store fresh meat in this drawer for no more than two days to guarantee the best freshness.

Extendable glass shelf

This appliance is equipped with an extendable glass shelf in the refrigerator compartment. The front half of the shelf can be placed in front of or under the rear half to suit your needs.

To fold the shelf:

1. Take out the front half gently.
2. Slide it into the lower rail and under the rear half.

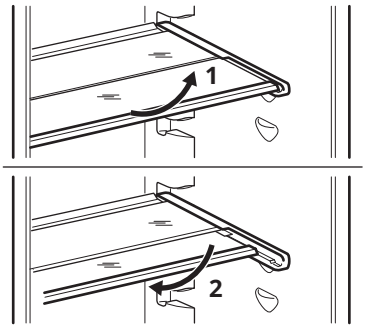

Vegetable drawer with humidity control

The vegetable drawer is the best storage location for fresh fruit and vegetables. You can adjust the air humidity in the vegetable drawer via the humidity slider. This allows fresh fruit and vegetables to be stored twice as long as with conventional storage.

The air humidity in the vegetable drawer can be set according to the type and amount of products to be stored:

Products	Suggested air humidity
Mainly fruit or a large load	Lower
Mainly vegetables, a mixed load or a small load	Higher

Notes:

- Fruit sensitive to cold (e.g. pineapple, banana, papaya and citrus fruit) and vegetables sensitive to cold (e.g. aubergines, cucumbers, zucchini, peppers, tomatoes and potatoes) should be stored outside the refrigerator at temperatures of about 8-12°C for optimum preservation of quality and flavour.
- Condensation may form in the vegetable drawer depending on the food and quantity stored. Remove condensation with a dry cloth and adjust air humidity in the vegetable drawer with the humidity slider.

The humidity slider is on the front of the vegetable drawer cover.

- To increase the air humidity, move the slider rightwards.
- To reduce the air humidity, move the slider leftwards.

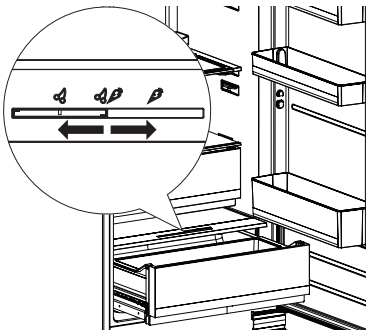

The vegetable drawer is attached to a sliding base and can be removed from the appliance.

To remove the vegetable drawer, follow these steps:

1. Fully pull out the drawer.
2. Lift the front of the drawer off the base.
3. Pull the drawer away from the base.

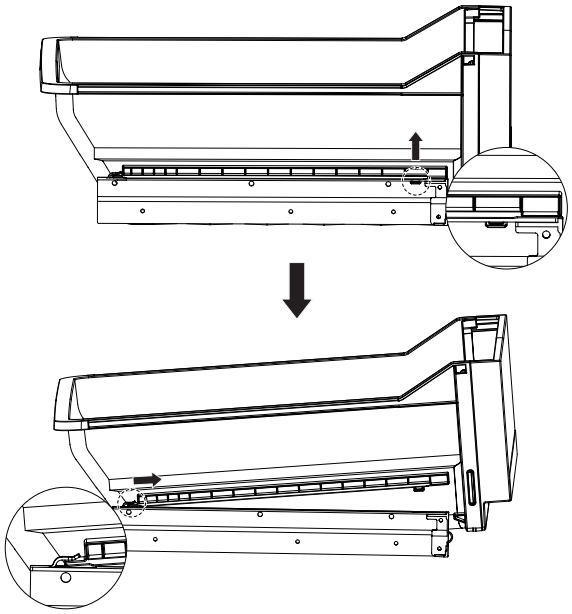

To reinstall the vegetable drawer, follow these steps:
1. Fully pull out the base.
2. Place the back of the drawer onto the base, then slide the two rear tabs into the two slots of the base.
3. Insert the two front tabs into the base.

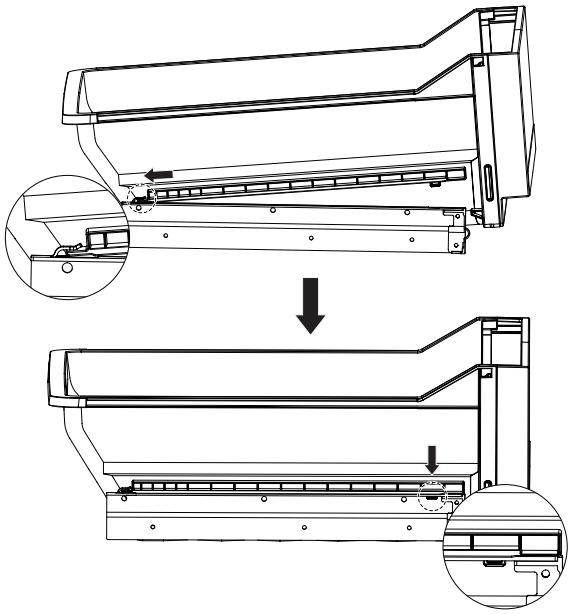

Hints and tips

Hints for fresh food refrigeration

- Cover or wrap the food, particularly if it has a strong flavour.
- Position the food so that air can circulate freely around it.
- For best performance, leave enough space in the refrigerator compartment for air to circulate around the packages. Also leave enough room at the front so the door can close tightly.
- Do not store warm food or evaporating liquids in the refrigerator.
- Meat (all types): wrap in suitable packaging and place on the glass shelf above the vegetable drawer. Store meat for at most 1-2 days.
- Cooked foods and cold dishes: cover and place on any shelf.
- Fruit and vegetables: clean thoroughly and place in the vegetable drawer. Bananas, potatoes, onions and garlic must not be kept in the refrigerator if not packed.
- Butter and cheese: place in special airtight containers or wrap in aluminium foil or polythene bags to exclude as much air as possible.
- Bottles: close with caps and place on the door balconies.

Freezer compartment

This appliance is a refrigerator with a ✳ *** star freezer compartment. Packaged frozen food can be stored for the period of time indicated on the packaging. Once defrosted, food must be used within 24 hours.

Freezing fresh food

- The quantity of fresh food that can be frozen in 24 hours is shown on the rating plate.
- Do not allow fresh, unfrozen food to touch food which is already frozen, thus avoiding a rise in temperature of the latter.
- Place fresh food in the freezing area of the freezer compartment leaving enough space between items to allow air to circulate freely.
- Wrap food to protect it from any water, humidity or condensation; this will prevent the spread of any odours in the refrigerator, while also ensuring better storage of frozen food.
- Lean foods store better and longer than fatty ones; salt reduces the storage life of food.
- Never place warm food in the freezer. Cooling hot foods before freezing saves energy and prolongs the life of the appliance.
- Do not refreeze partially thawed food.

Removing the freezer drawers

Pull the drawers all the way out, lift them up and remove.

Notes:
- To maximize the available space, you can use the freezer compartment without inserting the drawers. However, as the amount of food in the

compartment increases, the energy consumption also increases.
- After placing food in the compartment make sure the freezer compartment door closes properly.

Energy-saving tips

- Install the appliance in a dry, well ventilated room far away from any heat source (e.g. radiator, cooker, etc.) and in a place not exposed directly to the sun. If required, use an insulating plate.
- To guarantee adequate ventilation follow installation instructions.
- Insufficient ventilation on back of the product increases energy consumption and decreases cooling efficiency.
- The internal temperatures of the appliance may be affected by the ambient temperature, frequency of door opening, as well as location of the appliance. Temperature setting should take into consideration these factors.
- Allow warm food and drinks to cool down before placing in the appliance.
- Do not obstruct the fan (if available) with food items.
- After placing the food check if the door of compartments closes properly, especially the freezer door.
- Reduce to a minimum door opening.
- When thawing frozen food, place them in the refrigerator. The low temperature of the frozen products cools the food in the refrigerator.
- Positioning of the shelves in the refrigerator has no impact on the efficient usage of energy. Food should be placed on the shelves in such way to ensure proper air circulation (food should not touch each other and distance between food and rear wall should be kept).
- Damaged gaskets must be replaced as soon as possible.

Cleaning and maintenance

General tips

- Before servicing or cleaning the appliance, unplug it from the mains or disconnect the power supply.
- Regularly clean the appliance with a cloth and a solution of warm water and neutral detergent specifically formulated for refrigerator interiors. Do not use abrasive cleaners or tools.

CAUTION! Make sure that no water enters the lighting housing, electronic display housing or any other electrical parts.

CAUTION! The refrigerator accessories must not be placed in a dishwasher.

Defrosting the refrigerator compartment

The appliance is equipped with an automatic defrosting function. Manual defrosting is not required.

Defrosting the freezer compartment

The appliance is equipped with an automatic defrosting function. There will be no buildup of frost when it is in operation, neither on the internal walls, nor on the foods. Manual defrosting is not required.

If you do not use the appliance for a prolonged period

1. Switch off the appliance.
2. Disconnect the appliance from the power supply.
3. Remove all food.
4. Clean the appliance.
5. Leave the doors open just enough to allow air to circulate inside the compartments. This will prevent the formation of mould and unpleasant odours.

In the event of a power cut

- Keep the doors of the appliance closed. This will allow the food to stay cold as long as possible.
- If food has defrosted even partially, do not re-freeze it. Consume within 24 hours.

Replacing the lighting

The appliance is equipped with an LED light for interior lighting.
Only an authorized technician is allowed to replace the lighting device. Please contact your Authorised Service Centre. For a quicker service, always refer to the full list of Authorised Service Centres located at the end of this manual and call the corresponding phone numbers.

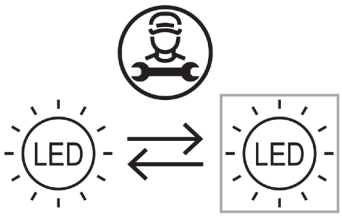

Troubleshooting

Problem	Possible causes	Solutions
The control panel is switched off and/or the appliance does not work.	There may be a problem with the power supply to the appliance.	Ensure that: • There is no power cut. • The power plug is properly inserted in the socket and the bipolar power switch, if present, is set to the correct position (on). • The household electrical system protection devices are in good working order. • The power supply cable is not damaged. • You have switched on the appliance.
The inside light does not work.	• The light is broken. • Failure of a component	Refer to “Replacing the lighting”.
Temperature inside the compartments is not low enough.	There could be various causes (see the solutions in the next column).	Ensure that: • The doors are closed properly. • The appliance is not installed near a heat source. • The temperature is set appropriately. • Air circulation inside the appliance is not obstructed in any way (see the installation instructions).
The front edge of the refrigerator next to the seal is hot.	This is not a problem. It prevents condensation from forming.	No solution is required.
The temperature inside the refrigerator compartment is too low.	• The set temperature is too low. • Refrigerator temperature sensor malfunctions.	• If no food in the compartment is frozen, set a higher temperature. • If some or all food in the compartment has become frozen, contact an authorized Service Centre.
There is frost buildup in the freezer or refrigerator compartment.	The freezer or refrigerator door does not close properly.	Ensure the door closes properly. Refer to “Closing the door”.
The appliance shows a code on the LCD screen and beeps.	Refer to “Display” in the “Operation” chapter.	Refer to “Display” in the “Operation” chapter.
The door does not close completely.	Refer to “Closing the door”.	Refer to “Closing the door”.

Normal noises

It is normal for the refrigeration system to produce some noises, such as gurgling and hissing.

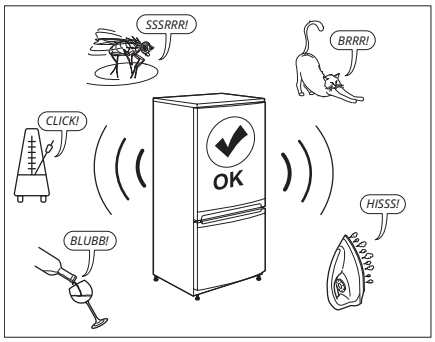

Closing the door

If	Do
Door gaskets are dirty.	Clean them.
Door gaskets are damaged.	Contact the After Sales Service to replace them.
The door is blocked by shelves, drawers, food items, etc.	Position correctly or remove the objects that block the door.
The door is not aligned with the cabinet.	Adjust the door. Refer to the separate Assembly Instructions.

Before contacting the After-sales Service:

Restart the appliance to see if the fault has been remedied. If it persists, switch the appliance off again and repeat the operation after an hour.
If your appliance still does not work properly after carrying out the checks listed in the troubleshooting guide and switching the appliance on again, contact the After-sales Service, clearly explaining the problem and specifying:

- the nature of the problem
- the date of purchase
- the model and serial number of the appliance

ⓘ The article number and serial number are shown on the rating plate on the internal left side of the appliance.

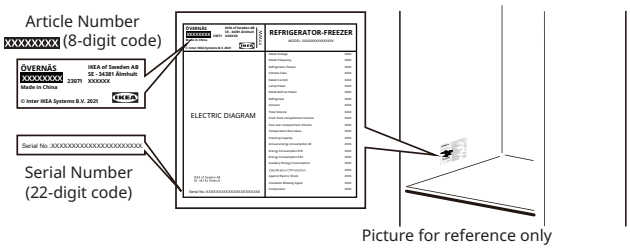

Technical data

Product category	
Product type	Refrigerator - Freezer
Installation type	Built-in
Product dimensions	
Height	1785 mm
Width	540 mm
Depth	550 mm
Net volume	
Fridge	193.0 L
Freezer	74.0 L
Defrost system	
Fridge	Automatic
Freezer	Automatic
Other specifications	
Star rating	* ***
Temperature rising time	9 hours
Freezing capacity	6 kg/24h
Energy consumption	184 kWh/year
Noise level	35 dB(A), Class B
Energy efficiency class	D
Rated voltage	220-240 V~
Rated frequency	50 Hz
Energy efficiency class of light source	F

Note: Information about the product in the product database can be accessed by scanning the QR code on the EPREL label.

Environmental concerns

1. Packing materials ♲

Recyclable materials are marked with the symbol ♲. Put the packing materials in relevant containers to recycle them.
Keep the packing materials (plastic bags, polystyrene parts, etc.) out of the reach of children, as they are a potential source of danger.

2. Scrapping/Disposal

The appliance is manufactured using recyclable material.
This appliance is marked in compliance with European Directive 2002/96/EC on Waste Electrical and Electronic Equipment (WEEE). By ensuring the correct disposal of this appliance, you can help prevent potentially negative consequences for the environment and human health.

The symbol on the appliance, or on the accompanying documents, indicates that this appliance should not be treated as domestic waste but must be taken to a special collection centre for the recycling of electrical and electronic equipment.
When scrapping the appliance, make it unusable by cutting off the power cable and removing the doors and shelves so that children cannot easily climb inside and become trapped.

Scrap the appliance in compliance with local regulations on waste disposal, taking it to a special collection centre; do not leave the appliance unattended even for a few days, since it is a potential source of danger for children.
For further information on the treatment, recovery and recycling of this product, contact your competent local office, the household waste collection service or the shop where you purchased the appliance.

Declaration of conformity

- This appliance has been designed for preserving food and is manufactured in compliance with Regulation (EC) No 1935/2004.
- This appliance has been designed, manufactured and marketed in compliance with:
  - safety objectives of the "Low Voltage" Directive 2014/35/EU (which replaces 2006/95/CE and subsequent amendments);
  - the protection requirements of Directive "EMC" 2014/30/EU.
- This appliance has been designed, manufactured and marketed in compliance with:
  - Electromagnetic Compatibility Regulations 2016
  - Electrical Equipment (Safety) Regulations 2016

IKEA Guarantee

How long is the IKEA guarantee valid?

This guarantee is valid for five (5) years from the original date of purchase of your appliance at IKEA, unless the appliance is named LAGAN in which case two (2) years of guarantee apply. The original sales receipt, is required as proof of purchase. If service work is carried out under guarantee, this will not extend the guarantee period for the appliance.

Which appliances are not covered by the IKEA five (5) years guarantee?

The range of appliances named LAGAN and all appliances purchased in IKEA before 1st of August 2007.

Who will execute the service?

IKEA service provider will provide the service through its own service operations or authorized service partner network.

What does this guarantee cover?

The guarantee covers faults of the appliance, which have been caused by faulty construction or material faults from the date of purchase from IKEA. This guarantee applies to domestic use only. The exceptions are specified under the headline "What is not covered under this guarantee?" Within the guarantee period, the costs to remedy the fault e.g. repairs, parts, labour and travel will be covered, provided that the appliance is accessible for repair without special expenditure. On these conditions the EU guidelines (DIRECTIVE (EU) 2019/771) and the respective local regulations are applicable. Replaced parts become the property of IKEA.

What will IKEA do to correct the problem?

IKEA appointed Service Provider will examine the product and decide, at its sole discretion, if it is covered under this guarantee. If considered covered, IKEA Service Provider or its authorized service partner through its own service operations, will then, at its sole discretion, either repair the defective product or replace it with the same or a comparable product.

What is not covered under this guarantee?

- Normal wear and tear.
- Deliberate or negligent damage, damage caused by failure to observe operating instructions, incorrect installation or by connection to the wrong voltage, damage caused by chemical or electrochemical reaction, rust, corrosion or water damage including but not limited to damage caused by excessive lime in the water supply, damage caused by abnormal environmental conditions.
- Consumable parts including batteries and lamps.
- Non-functional and decorative parts which do not affect normal use of the appliance, including any scratches and possible color differences.
- Accidental damage caused by foreign objects or substances and cleaning or unblocking of filters, drainage systems or soap drawers.
- Damage to the following parts: ceramic glass, accessories, crockery and cutlery baskets, feed and drainage pipes, seals, lamps and lamp covers, screens, knobs, casings and parts of casings. Unless such damages can be proved to have been caused by production faults.
- Cases where no fault could be found during a technician's visit.
- Repairs not carried out by our appointed service providers and/or an authorized service contractual partner or where non-original parts have been used.
- Repairs caused by installation which is faulty or not according to specification.
- The use of the appliance in a non-domestic environment i.e. professional use.
- Transportation damages. If a customer transports the product to his home or another address, IKEA is not liable for any damage that may occur during transport. However, if IKEA delivers the product to the customer's delivery address, then damage to the product that occurs during this delivery will be covered by IKEA.
- Cost for carrying out the initial installation of the IKEA appliance. However, if an IKEA appointed Service Provider or its authorized service partner repairs or replaces the appliance under the terms of this guarantee, the appointed Service Provider or its authorized service partner will reinstall the repaired appliance or install the replacement, if necessary.

These restrictions do not apply to fault-free work carried out by a qualified specialist using our original parts in order to adapt the appliance to the technical safety specifications of another EU country.

How country law applies

The IKEA guarantee gives you specific legal rights, which cover or exceed all the local legal demands. However these conditions do not limit in any way consumer rights described in the local legislation.

Area of validity

For appliances which are purchased in one EU country and taken to another EU country, the services will be provided in the framework of the guarantee conditions normal in the new country.
An obligation to carry out services in the framework of the guarantee exists only if the appliance complies and is installed in accordance with:

- the technical specifications of the country in which the guarantee claim is made;
- the Assembly Instructions and User Manual Safety Information.

The dedicated AFTER SALES for IKEA appliances

Please don't hesitate to contact IKEA appointed After Sales Service Provider to:

- make a service request under this guarantee;
- ask for clarifications on installation of the IKEA appliance in the dedicated IKEA kitchen furniture;
- ask for clarification on functions of IKEA appliances.

To ensure that we provide you with the best assistance, please read carefully the Assembly Instructions and/or the User Manual before contacting us.

How to reach us if you need our service

You can find phone numbers of the IKEA appointed After Sales Service Providers at the end of this manual.

In order to provide you with a quicker service, we recommend that you use the specific phone numbers listed in this manual. Always use the phone numbers listed in the user manual for the specific appliance you need an assistance for. Please remember to provide the 8-digit article number and 22-digit serial number shown on the rating plate of your appliance.

SAVE THE SALES RECEIPT!
It is your proof of purchase and required for the guarantee to apply. The sales receipt also reports the IKEA name and article number (8 digit code) for each of the appliances you have purchased.

Do you need extra help?

For any additional questions not related to After Sales of your appliances please contact your nearest IKEA store call centre. We recommend you read the appliance documentation carefully before contacting us.

Spare parts information

- The following spare parts: thermostats, temperature sensors, printed circuit boards and light sources, will be available to professional repairers for a minimum period of seven years, after placing the last unit of the model on the market.
- The following spare parts: door handles, door hinges, trays and baskets will be available to professional repairers and end users for a minimum period of seven years, and door gaskets for a minimum period of 10 years, after placing the last unit of the model on the market.

The spare parts can be found:
www.ikea.com

Country	Phone Number	Call Fee	Opening Time (Mon-Fri)
Deutschland	08007242420	Kostenlos	8am - 5pm
France	0805543333	Gratuit	8.30 am – 7.00 pm (lun-ven) 8.30 am – 1.00 pm (sam)
United Kingdom	08009175827	free	9am till 5pm
Ireland		free	9am till 5pm
Italia	800130373	Gratuito	9am-6pm
España	900822398	Gratis	9am-6pm
Ελλάδα	0080044146128 (+30)21 6860020	Χωρίς χρέωση	9am-6pm
България	0 700 10 218	Безплатно	9.00 – 18.00 ч. (пон. - пет.)
Nederland	0900 - 235 4532 (0900-BEL IKEA) 0031 - 50 316 8772 (internationaal)	Gratis	Ma-Vr 8-20, Za 9-20
Sverige	0775700500	Kostnadsfritt	mån-fre 8.30 - 20.00 lör-sön 9.30 - 18.00
Schweiz	0800110344	Kostenlos	8am - 5pm
Suisse		Gratuit	8am - 5pm
Svizzera		Gratuito	8am - 5pm
Österreich	0800909626	Kostenlos	9am-5pm
België	080080159	Gratis	9am-5pm
Belgique		Gratuit	9am-5pm
Luxembourg		Gratuit	9am-5pm
Danmark	70 15 09 09	Gratis	man. - fre. 09.00 - 20.00 lør. - søn. 09.00 - 18.00
Norge	80031407	Gratis	9.00 am – 4.00 pm
Polska	800012088	Bezpłatne	9am-5pm
Portugal	800210151	Gratuita	9am-6pm
Česká republika	800050717	Zdarma	9am-5pm
Suomi	0800302588	Maksuton	9.00 am – 4.00 pm
Magyarország	0680984517	Ingyenes	9am-5pm
Türkiye	4449774	Ücretsiz	8.00 am – 17.30 pm
Россия	88005510448	Бесплатно	9am-6pm
Slovensko	(+42)1415623915	Bezplatne	9.00 – 18.00 (pondelok – piatok)
Latvija	(+371)67717065	Bezmaksas	9.00 – 18.00 (P – Pk)
Eesti	(+372)6366525	Tasuta	9.00 – 18.00 (E–R)
Lietuva	(+370)67641956	Nemokamai	9.00 – 18.00 (Pr–Pn)
Κύπρος	IKEA.com	Ελεύθερος	

Country	Phone Number	Call Fee	Opening Time (Mon-Fri)
Gran Canaria	IKEA.com	Gratis	
Србија	IKEA.com	Besplatno	
Ísland	IKEA.com	Ókeypis	
România	IKEA.com	Gratuit	
Hrvatska	IKEA.com	Ne naplaćuje se	
Slovenija	IKEA.com	Brezplačno	
Tenerife	IKEA.com	Gratis	

© Inter IKEA Systems B.V. 2025

AA-2596617-2