GB

BEJUBLAD

Design and Quality
IKEA of Sweden

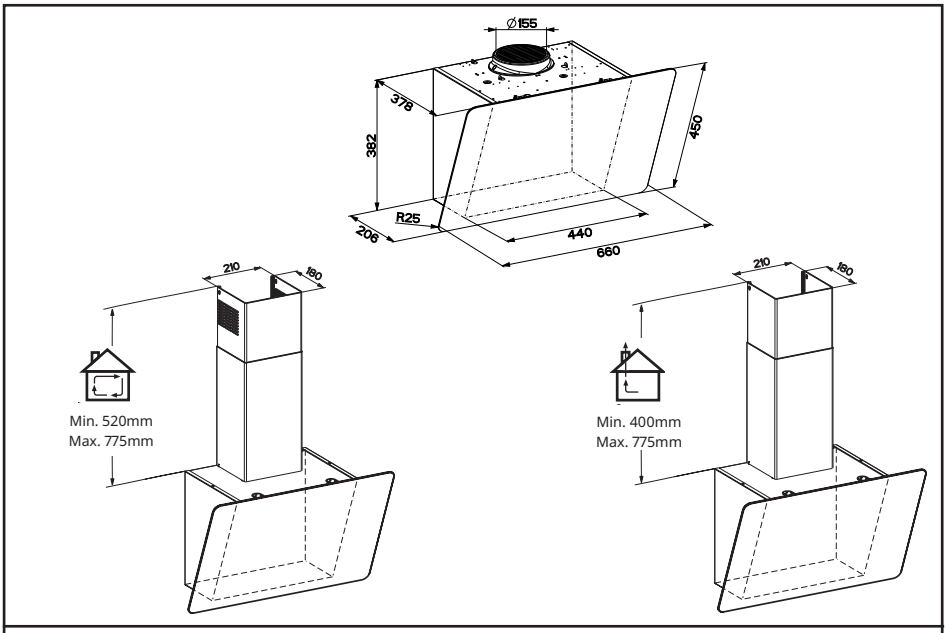
Ø155
378
382
450
R25
206
440
660
210
180
Min. 520mm
Max. 775mm
210
180
Min. 400mm
Max. 775mm

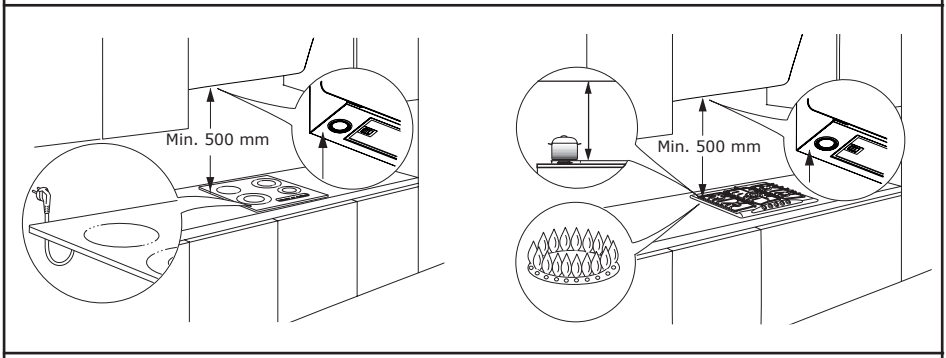
Min. 500 mm
Min. 500 mm

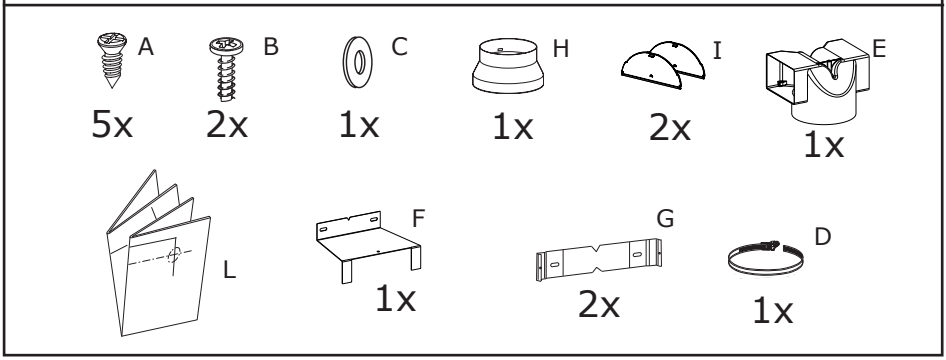
A
5x
B
2x
C
1x
H
1x
I
2x
E
1x
L
F
1x
G
2x
D
1x

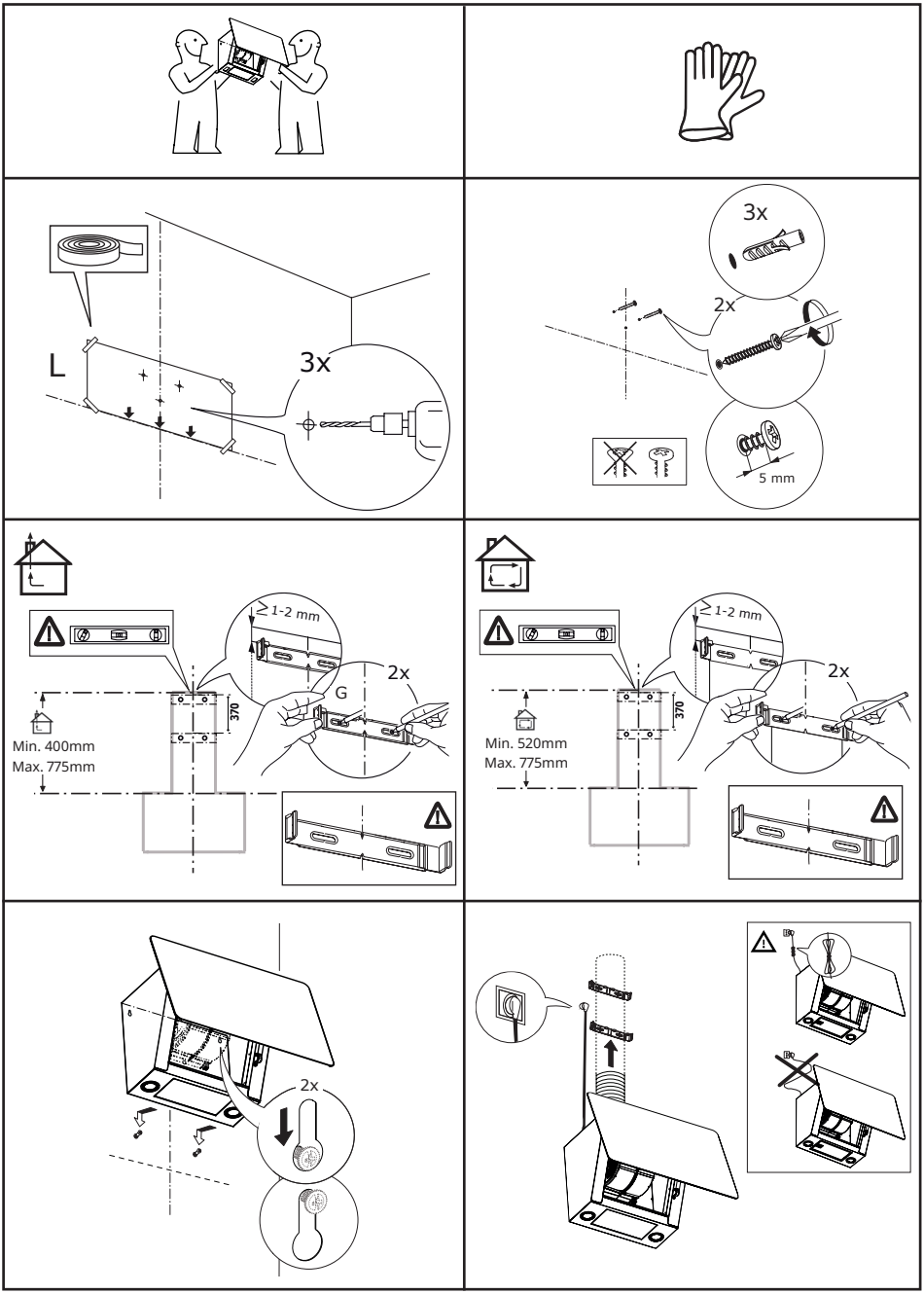
L
3x
3x
2x
5 mm
≥ 1-2 mm
2x
G
370
Min. 400mm
Max. 775mm
≥ 1-2 mm
2x
370
Min. 520mm
Max. 775mm
2x

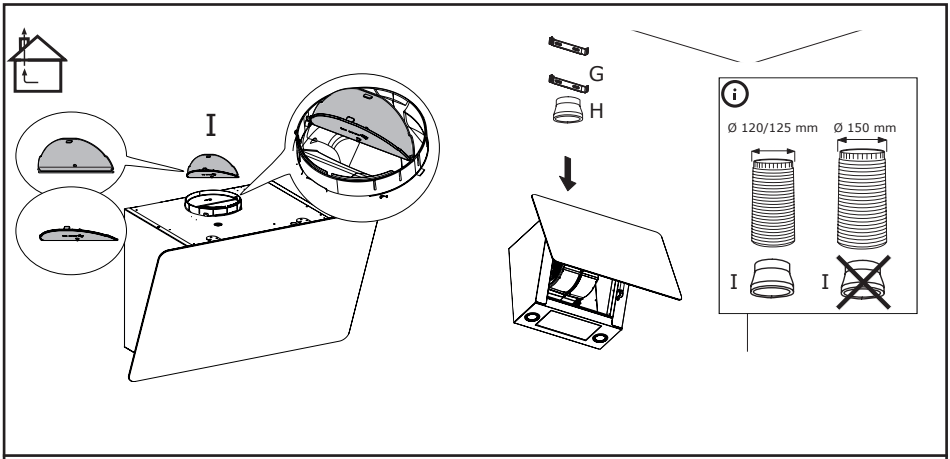
I
G
H
Ø 120/125 mm
Ø 150 mm
I
I

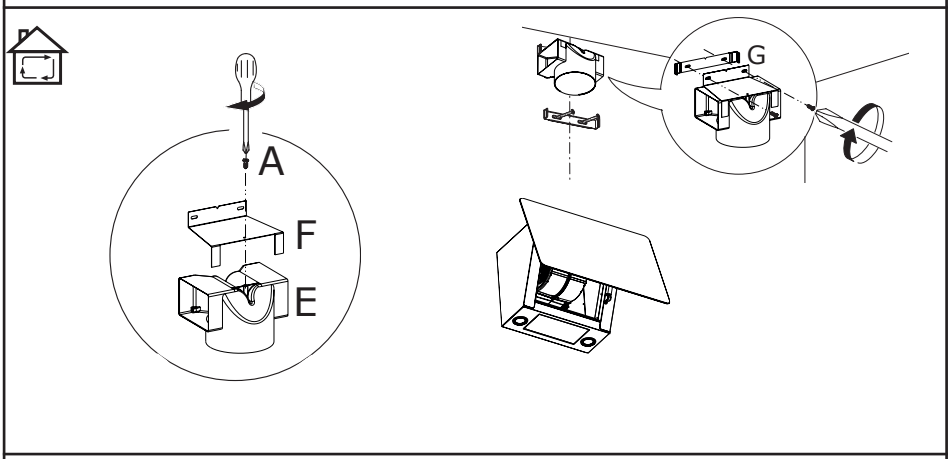
A
F
E
G

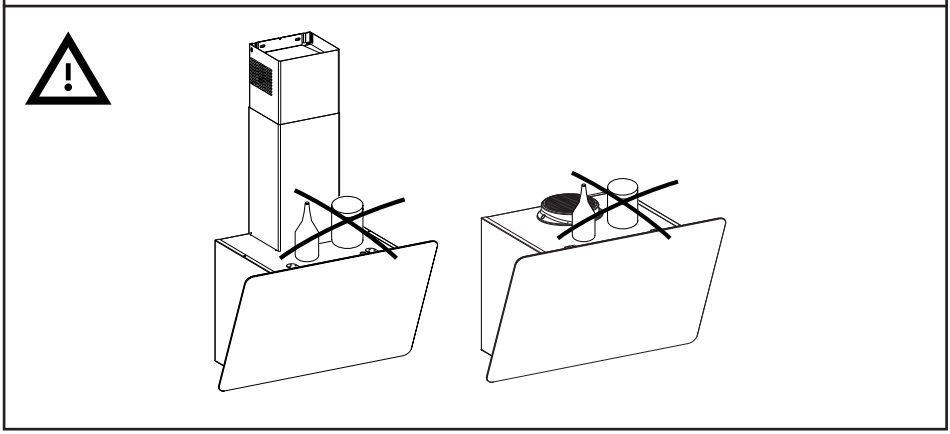

Safety information

ⓘ For your safety and correct operation of the appliance, read this manual carefully before installation and use. Look carefully at the warning pictures at the beginning of this manual. For a correct and complete installation, refer to the specific installation manual provided with the product. Always keep these instructions with the appliance even if you move or sell it. Users must fully know the operation and safety features of the appliance.

⚠ The wire connection has to be done by specialized technician.

- The manufacturer will not be held liable for any damages resulting from incorrect or improper installation.
- The minimum safety distance between the cooker top and the extractor hood is: for electrical hob 500mm and for gas hob 500mm.
- If the instructions for installation for the gas hob specify a greater distance, this must be respected.
- Check that the mains voltage corresponds to that indicated on the rating plate fixed to the inside of the hood.
- Means for disconnection must be incorporated in the fixed wiring in accordance with the wiring rules.
- For Class I appliances, check that the domestic power supply guarantees adequate earthing.
- Connect the extractor to the exhaust flue through a pipe of minimum diameter 120 mm. The route of the flue must be as short as possible.
- Do not connect the extractor hood to exhaust

ducts carrying combustion fumes (boilers, fireplaces, etc.).

- If the extractor is used in conjunction with non-electrical appliances (e.g. gas burning appliances), a sufficient degree of aeration must be guaranteed in the room in order to prevent the backflow of exhaust gas. When the cooker hood is used in conjunction with appliances supplied with energy other than electric, the negative pressure in the room must not exceed 0,04 mbar to prevent fumes being drawn back into the room by the cooker hood.
- The air must not be discharged into a flue that is used for exhausting fumes from appliances burning gas or other fuels.
- If the supply cord is damaged, it must be replaced from the manufacturer or its service agent.
- Connect the plug to a socket complying with current regulations, located in an accessible place.
- With regards to the technical and safety measures to be adopted for fume discharging it is importat to closely follow the regulations provided by the local authorities.

⚠ **WARNING**: Before installing the Hood, remove the protective films.

- Use only screws and small parts in support of the hood.

⚠ **WARNING**: Failure to install the screws or fixing device in accordance with these instructions may result in electrical hazards.

- Connect the hood to the power net by using a bipolar switch having a contact gap of at least 3 mm.
- Do not look directly at the light through optical devices (binoculars,

magnifying glasses...).

- Do not flambè under the range hood; risk of fire.
- This appliance can be used by children aged from 8 years and above and persons with reduced physical, sensory or mental capabilities or lack of experience and knowledge if they have been given supervision or instruction concerning use of the appliance in a safe way and understand the hazards involved. Children shall not play with the appliance. Cleaning and user maintenance shall not be made by children without supervision.
- Children should be supervised to ensure that they do not play with the appliance.
- The appliance is not to be used by persons (including children) with reduced physical, sensory or mental capabilities, or lack of experience and knowledge, unless they have been given supervision or instruction

⚠ Accessible parts may become hot when used with cooking appliances.

- Clean and/or replace the Filters after the specified time period (Fire hazard).
- There shall be adequate ventilation of the room when the range hood is used at the same time as appliances burning gas or other fuels (not applicable to appliances that only discharge the air back into the room)

Installation

Installation modes
The hood has been designed to be installed and used either as a “Exhaust mode”, or as a “Recirculation mode”.
Exhaust mode (see symbol in installation booklet)
Cooking steam is sucked and channelled outside the house through a discharge duct (not supplied), fitted to the hood steam outlet.
Ensure that the discharge duct is correctly fitted to the air outlet, unit using an appropriate connection system.

Recirculation mode (see symbol in installation booklet)
The air is filtered through one or more the charcoal filters, and then resent into room.

Important: Ensure appropriate air circulation around the hood.
Important: If the hood is supplied without charcoal filters and installed on recirculation mode, these must be fitted before the hood can be used. Filters are available in shops.
The hood should be installed away from particularly dirty areas, windows, doors and heat sources.
The accessories for wall fixing are not included because wall made of different materials require different types of fixing accessories. Use fixing systems suitable for the walls of your home and the weight of the appliance. For more details, contact a specialized dealer.
Keep this booklet for future consultation.

Environmental aspects

Disposal of household appliances

- The symbol on the product or on its packaging indicates that the product must not be disposed of with the normal domestic waste. The product must be disposed of at a specialist re-cycling centre for electrical and electronic components. By making sure that this product is disposed of properly, you will help prevent possible negative consequences for the environment and for health that might result from its improper disposal.

  For more detailed information on how to re-cycle this product, please contact your local municipal offices, local waste disposal service or the shop in which the product was purchased.

Disposal of packaging materials
Materials with the symbol can be recycled. Dispose of packing materials in special recycling collection bins.

Care and cleaning

Use

- Switch off or unplug the appliance from the mains supply before carrying out any maintenance work.
- The top of the hood must not to be used as a shelf.
- The extractor hood has been designed exclusively for domestic use to eliminate kitchen smells.
- Never use the hood for purposes other than for which it has been designed.
- Never leave high naked flames under the hood when it is in operation.
- Adjust the flame intensity to direct it onto the bottom of the pan only, making sure that it does not engulf the sides.
- Deep fat fryers must be continuously monitored during use: overheated oil can burst into flames.

Care and cleaning

- Grease filters must be cleaned every 2 months of operation, or more frequently for particularly heavy usage, in order to avoid a potential fire hazard, and can be washed in a dishwasher.
- Clean the hood using a damp cloth and a neutral liquid detergent.

Care and cleaning long life Charcoal filter (Green)

- The anti-odour Filter can be washed and regenerated every 3-4 months (or more frequently if the hood is subject to intensive use), up to a Max. of 8 regeneration cycles (in case of particularly intensive use it is recommended that you do not exceed 5 cycles).

Regeneration procedure:

- Wash in the dishwasher at a MAX temperature of 70° or hand wash in hot water without using abrasive sponges (do not use detergents!).
- Dry in the oven at a MAX temperature of 70° for 2 hours (it is recommended to read carefully the user manual and the assembly instruction of the oven of your own).

Replacing the lamps

For Replacement please contact an Authorized Service Center.

Manufacturer

Ikea of Sweden AB - SE - 343 81 Älmhult, Sweden

Electrical connection

WARNING: All electrical connections must be carried out by an authorised installer.

- Before making the connections, check that the rated voltage of the appliance indicated on the respective rating plate corresponds to the power supply voltage.

Caution! Do not weld any of the cables!

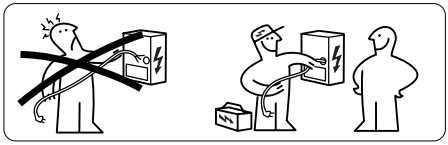

Rating plate

The technical information is situated in the rating plate on the internal side of the appliance.

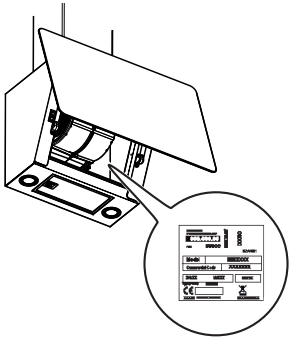

IKEA GUARANTEE

Do You need extra help?
For any additional questions not related to After Sales of your appliances, like clarifications on installation of the IKEA appliance in the dedicated IKEA kitchen furniture or for clarification on functions of the IKEA appliances, please contact your nearest IKEA Customer Support Centre, the number is available on www.IKEA.com.

We recommend you read the appliance documentation carefully before contacting us.

Read about our guarantee terms on www.ikea.com.

For requests under this guarantee, do not hesitate to contact the IKEA appointed Authorized Service Centre.
See the relative national phone numbers on the next page.
For quicker service, always refer to the IKEA article number (8-digit code) and the 12-digit service number found on the rating plate of your appliance.

SAVE THE SALES RECEIPT.

Country name in local languages	Telephone number	Opening times
Australia	Victoria: (03) 8523 2154 New South Wales: (02) 5020 6641 Queensland: (07) 3380 6800 IKEA Perth: (08) 9201 4532 IKEA Adelaide: (08) 8154 4532	
Österreich	13602771461	Mo-Fr: 8 - 20
België / Belgique	26200311	Ma-Vr: 8 - 20 / Lun-Ven: 8 - 20
България	02 4003536	Пон-Пт: 8 - 20
Canarias	913754126	Lunes-Viernes: 8 - 20
Κύπρος	http://www.ikea.com	8 - 20
Hrvatska	0800 3636	Pon-Pet: 8 - 20
Česká republika	225376400	Po-Pá: 8 - 20
Danmark	70150909	Man.-Fre.: 9 - 20
Eesti	http://www.ikea.com	E-R: 8 - 20
Suomi	981710374	Lu-Ve: 8 - 20
France	170480513	Lun-Ven: 9 - 21
Deutschland	6929993602	Mo-Fr: 8 - 20
Great Britain	2076601517	Mon-Fri: 8 - 20
Ελλάδα	2109696497	Δευτ-Παρ: 8 - 20
Magyarország	(06-1)-3285308	Hétfő-Péntek: 8 - 20
Italia	+39 0732/691238	Lun-Ven: 8 - 20
Ireland	2076601517	Mon-Fri: 8 - 20
Ísland	5852409	Mánudagur-Föstudagur Kl.: 8 - 20
Latvija	http://www.ikea.com	P.- Pk.: 8 - 20
Lietuva	(0) 520 511 35	Pirm.-Penkt.: 8 - 20
Mayorca	913754126	Lunes-Viernes: 8 - 20
Malta	+356 (0)25464000	Mon-Fri: 8 - 20
Norge	23500112	Man-Fre: 8 - 20
Nederland	050-7111267 / +31 507111267	Ma–Vr: 8 - 20
Polska	225844203	Poniedziałek-Piątek: 8 - 20
Portugal	213164011	Seg.-Sex.: 9 - 21
România	021 2044888	Luni-Vineri: 8 - 20
Россия	84957059426	Пон-Пятн: 9 - 21
Србија	011 7 555 444	Пон-Пет: 8 - 20
Slovensko	(02) 50102658	Pon–Pia: 8 - 20
Slovenija	+386-1-8107781	Ponedeljek-Petek: 8 - 20
España	913754126	Lunes-Viernes: 8 - 20
Sverige	0775-700 500	Mån-Fre: 8 - 20
Schweiz / Suisse / Svizzera (Ticino)	225675345	8 bis 20 Werktage / Lun-Ven: 8 - 20
Türkiye	+90/262/644 65 95	Pzt-Cuma: 8 - 20
Україна	http://www.ikea.com	Понеділок-П'ятниця: 8 - 20
Maroc / المغرب	+212 (5) 20100900 www.IKEA.ma	10.00 - 17.00

991.0672.168_02 - 220823
D00008402_01

© Inter IKEA Systems B.V. 2020

23199

AA-2279368-4