VÅRHOLMEN

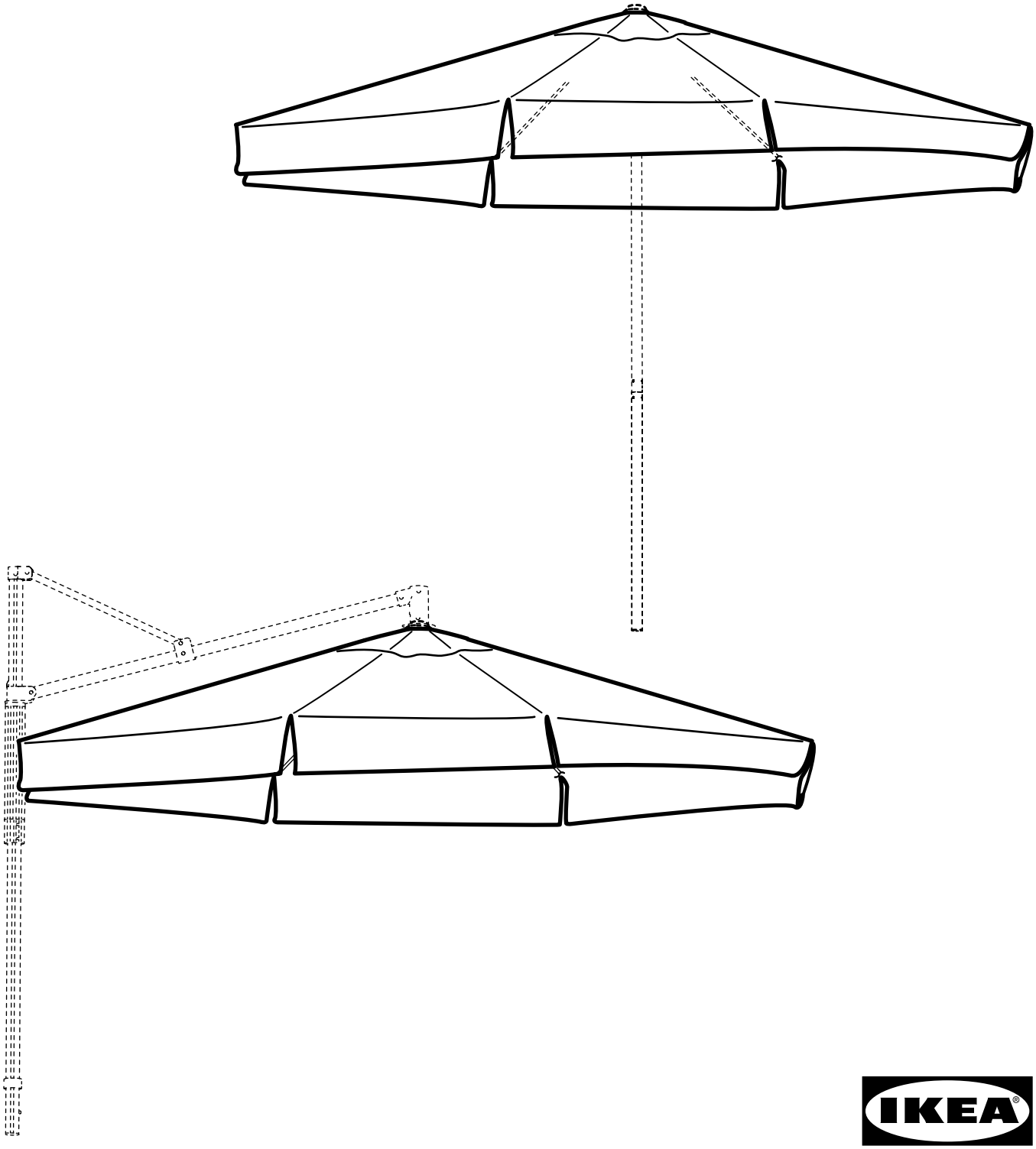

Design and Quality
IKEA of Sweden

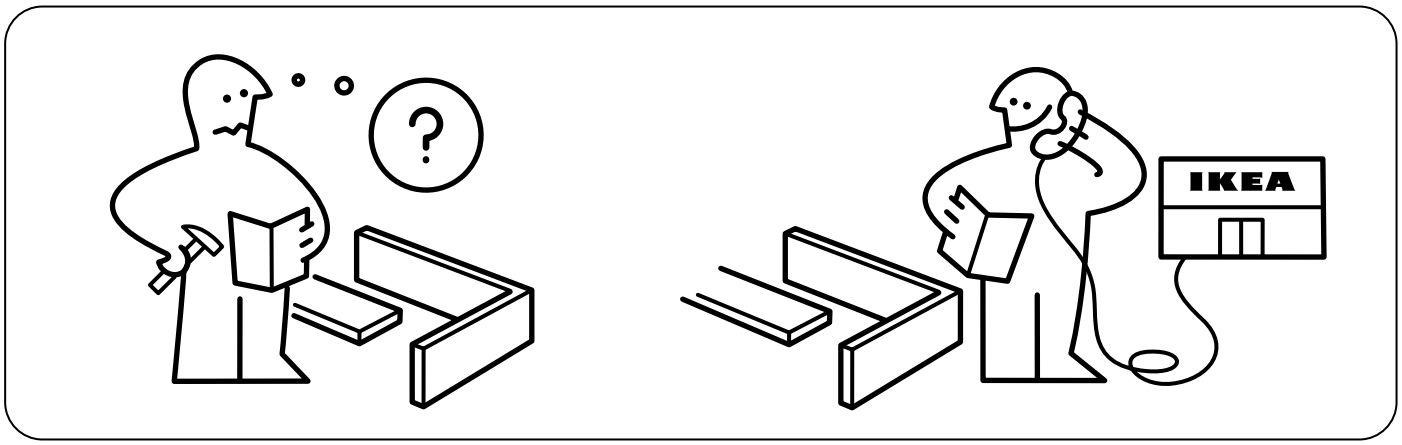

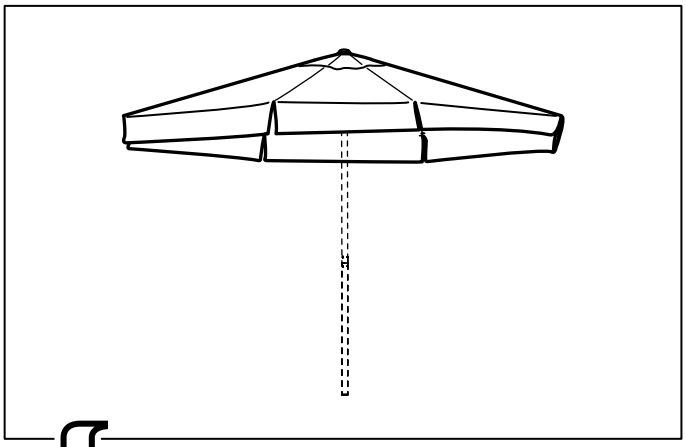

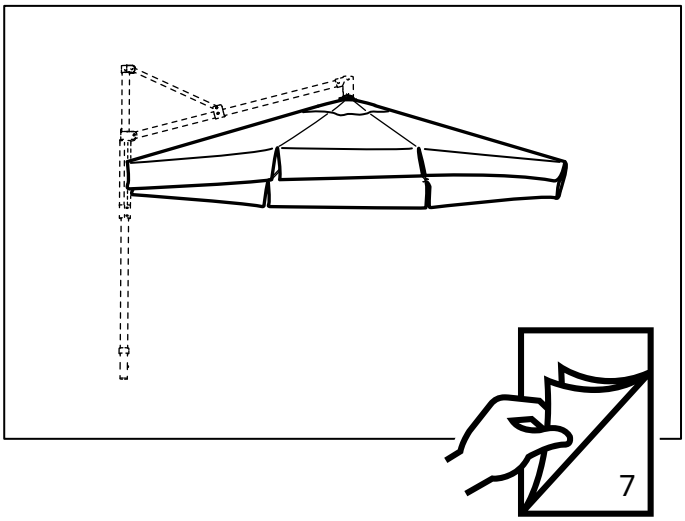

1

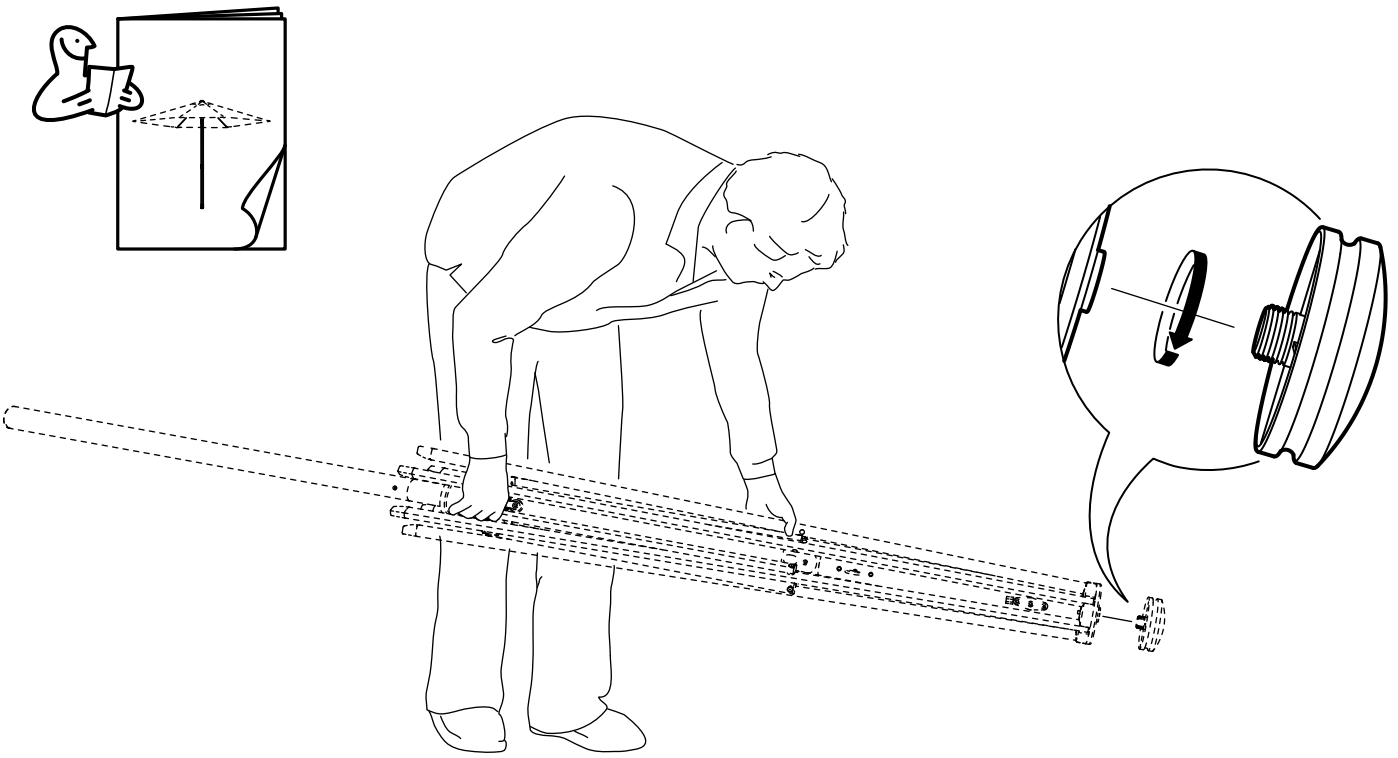

AA-2146931-3

2

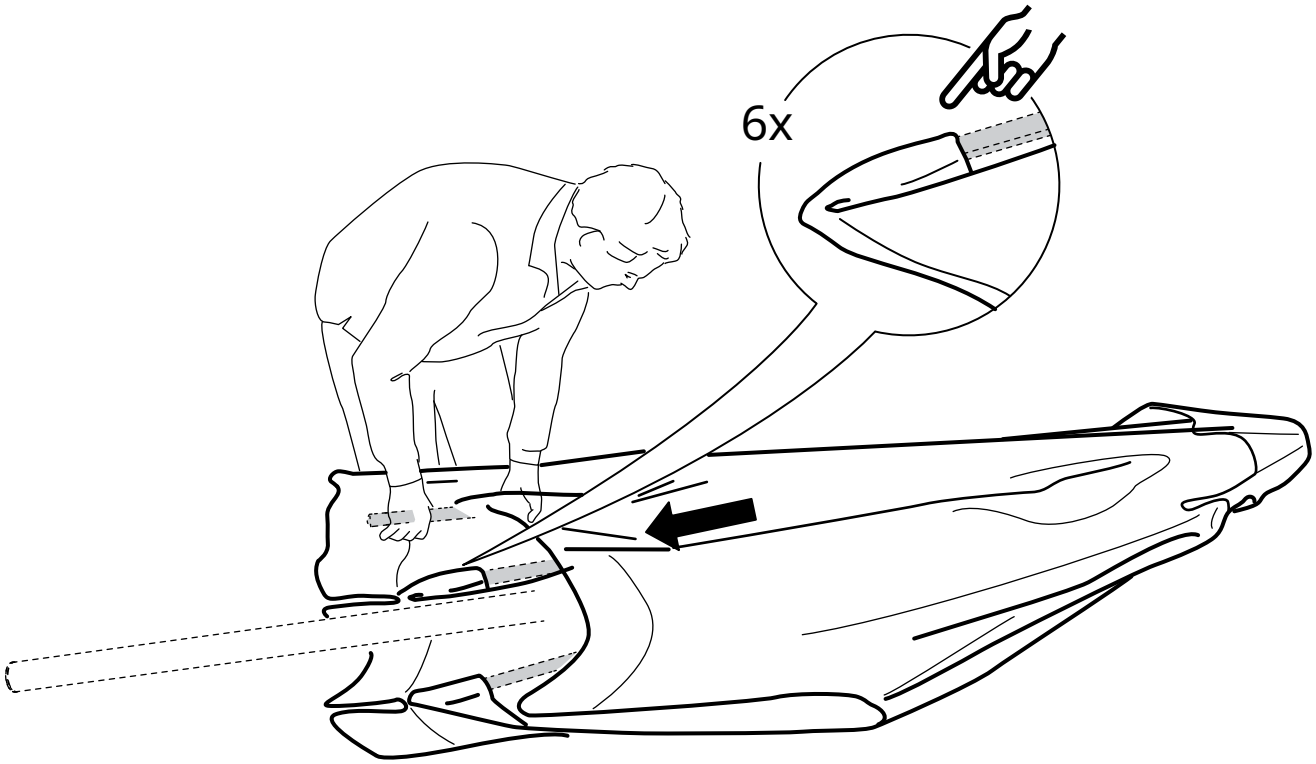

3

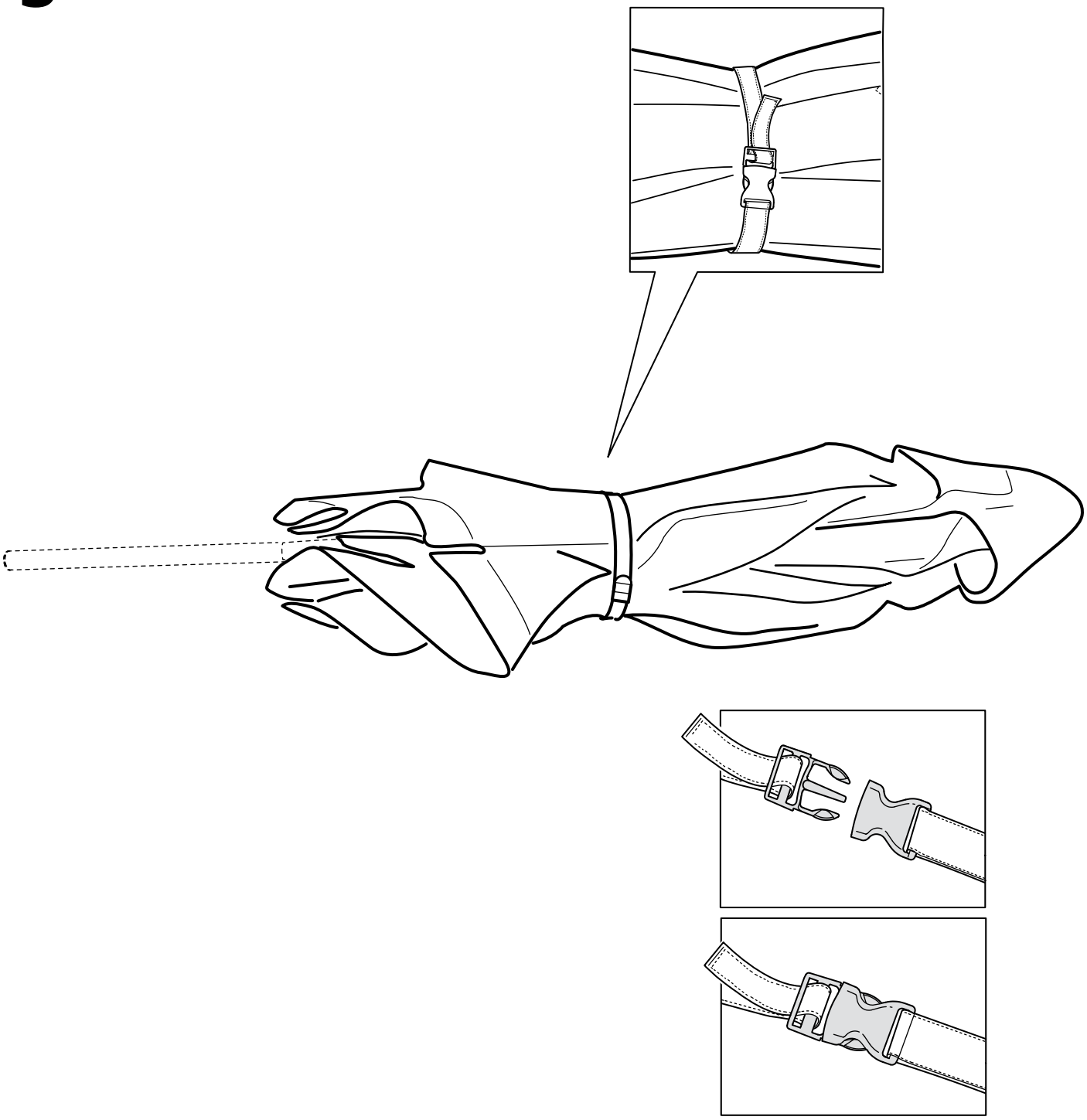

4

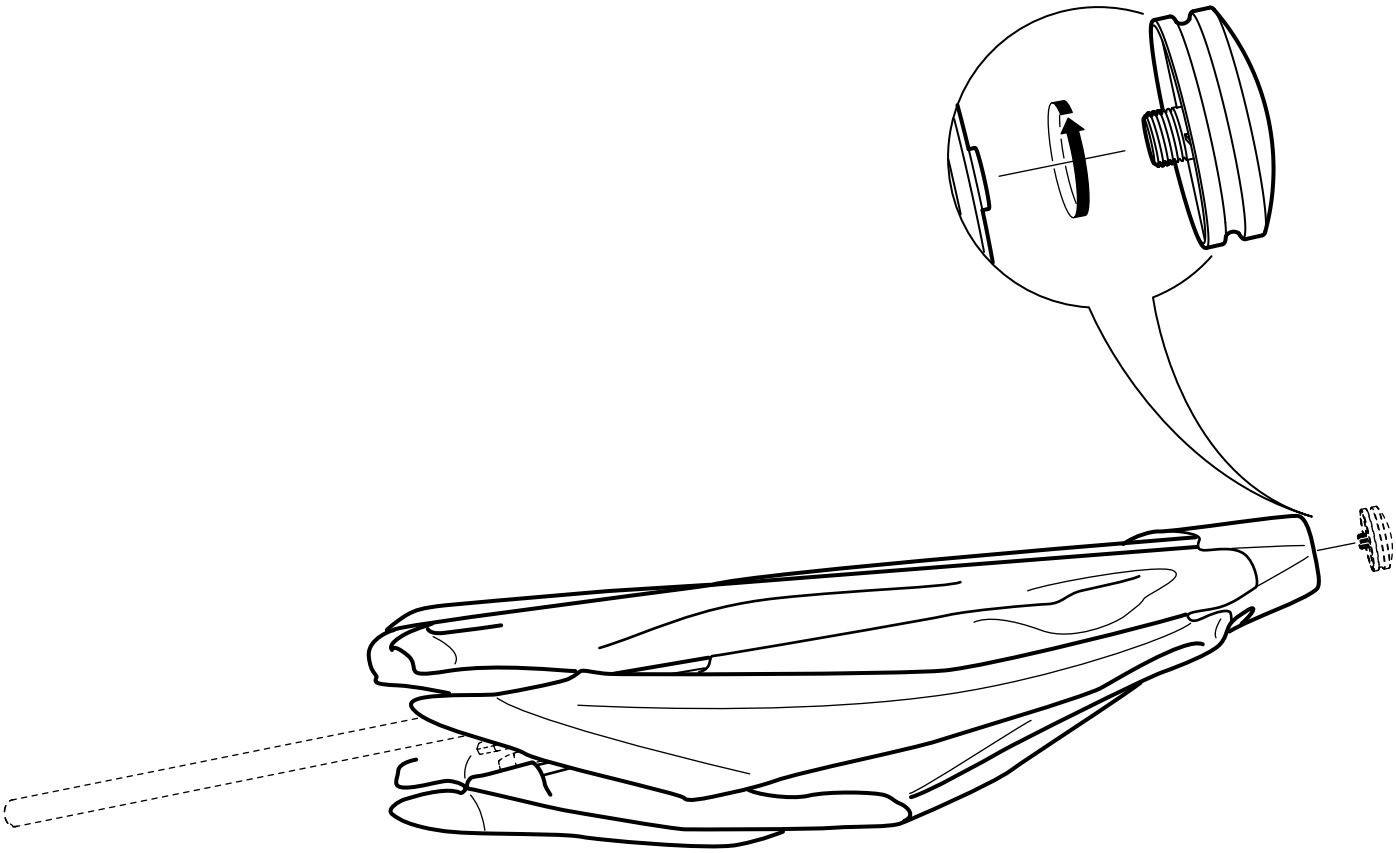

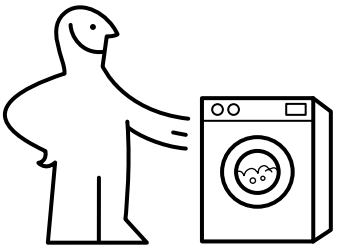

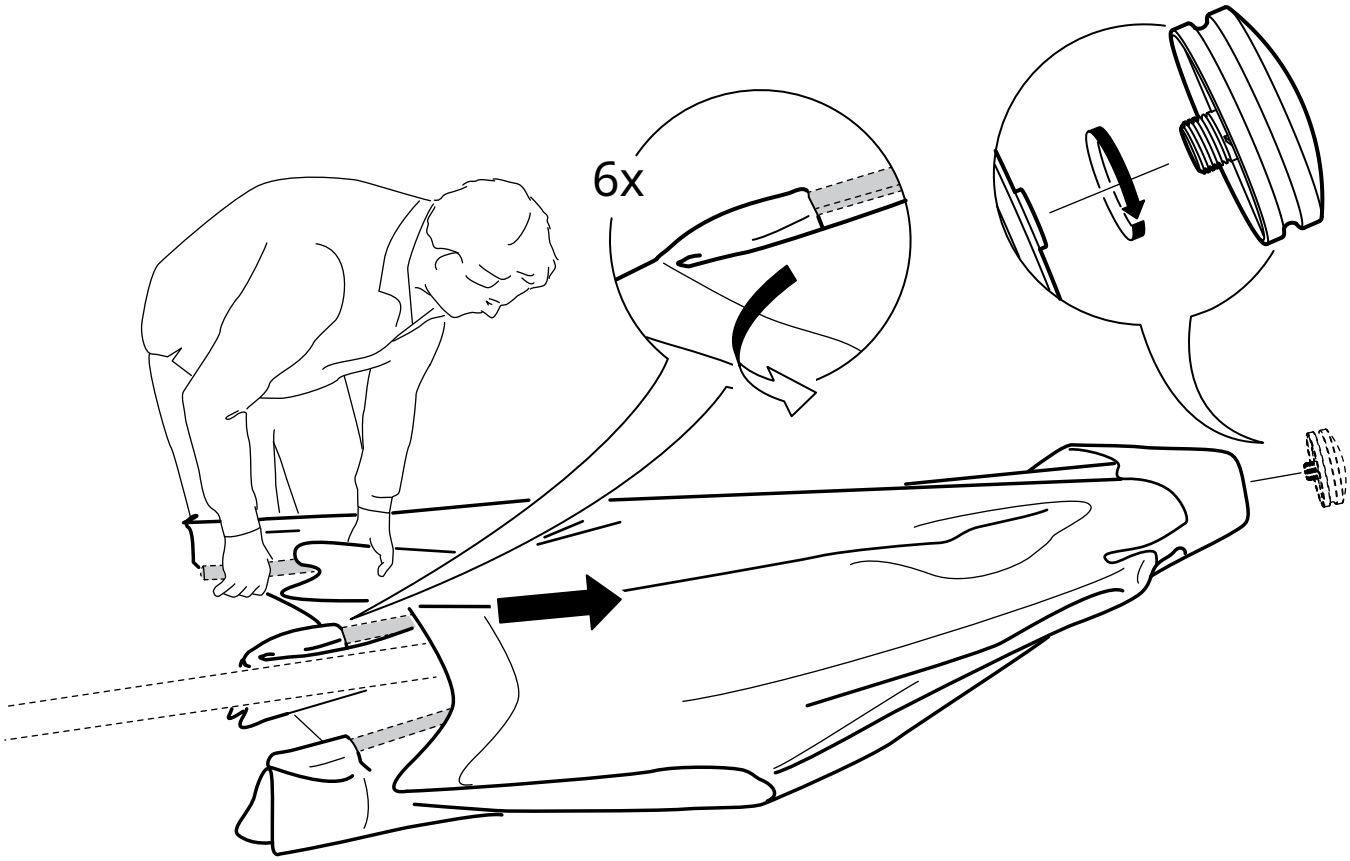
6x

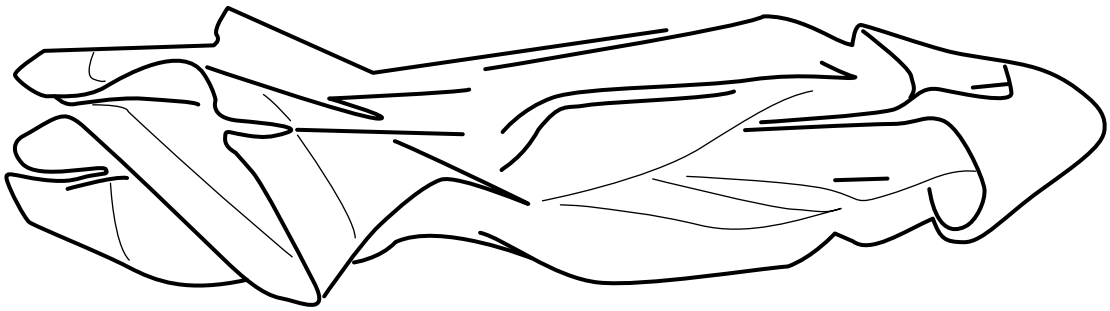

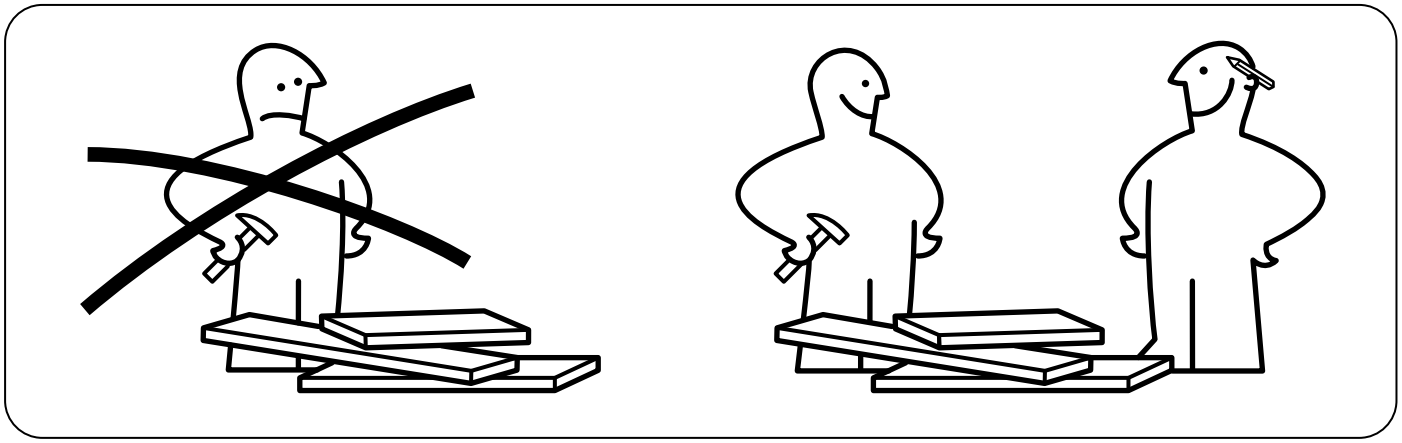

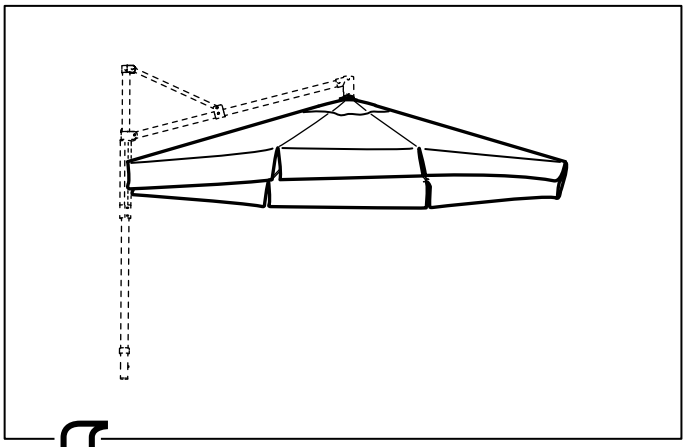

1

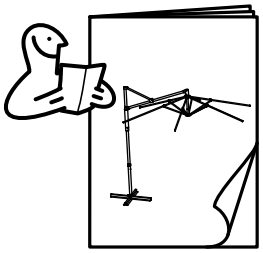

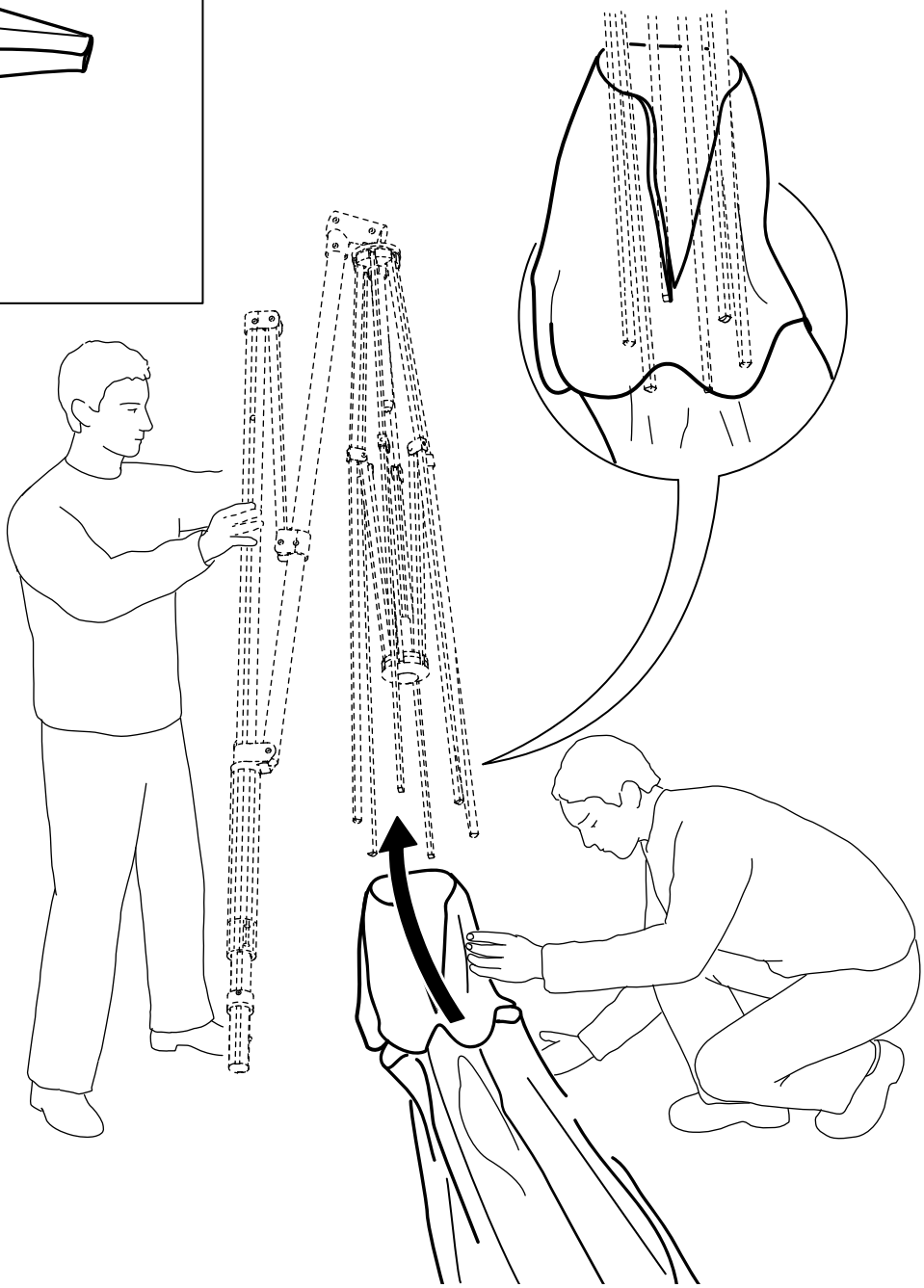

2

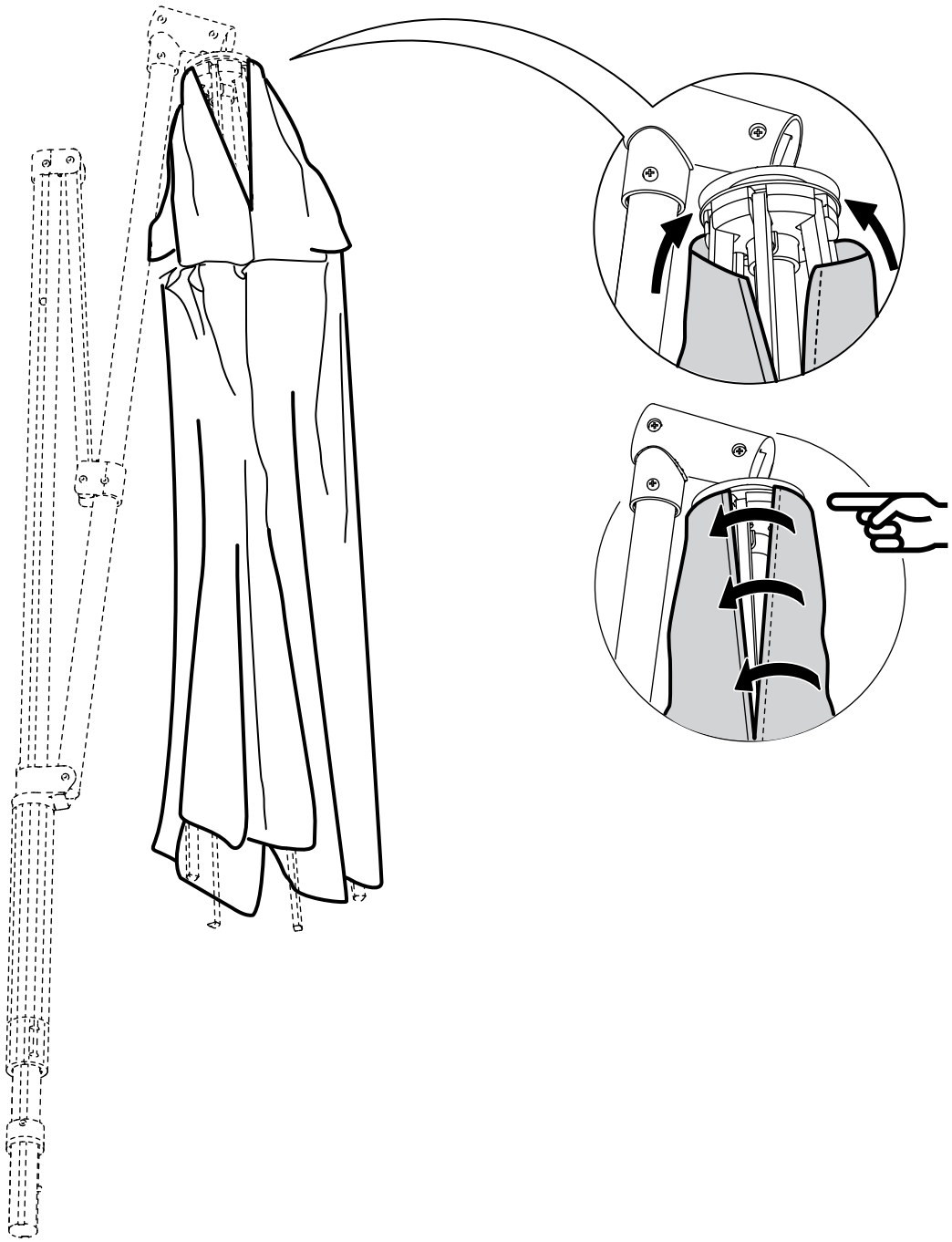

3

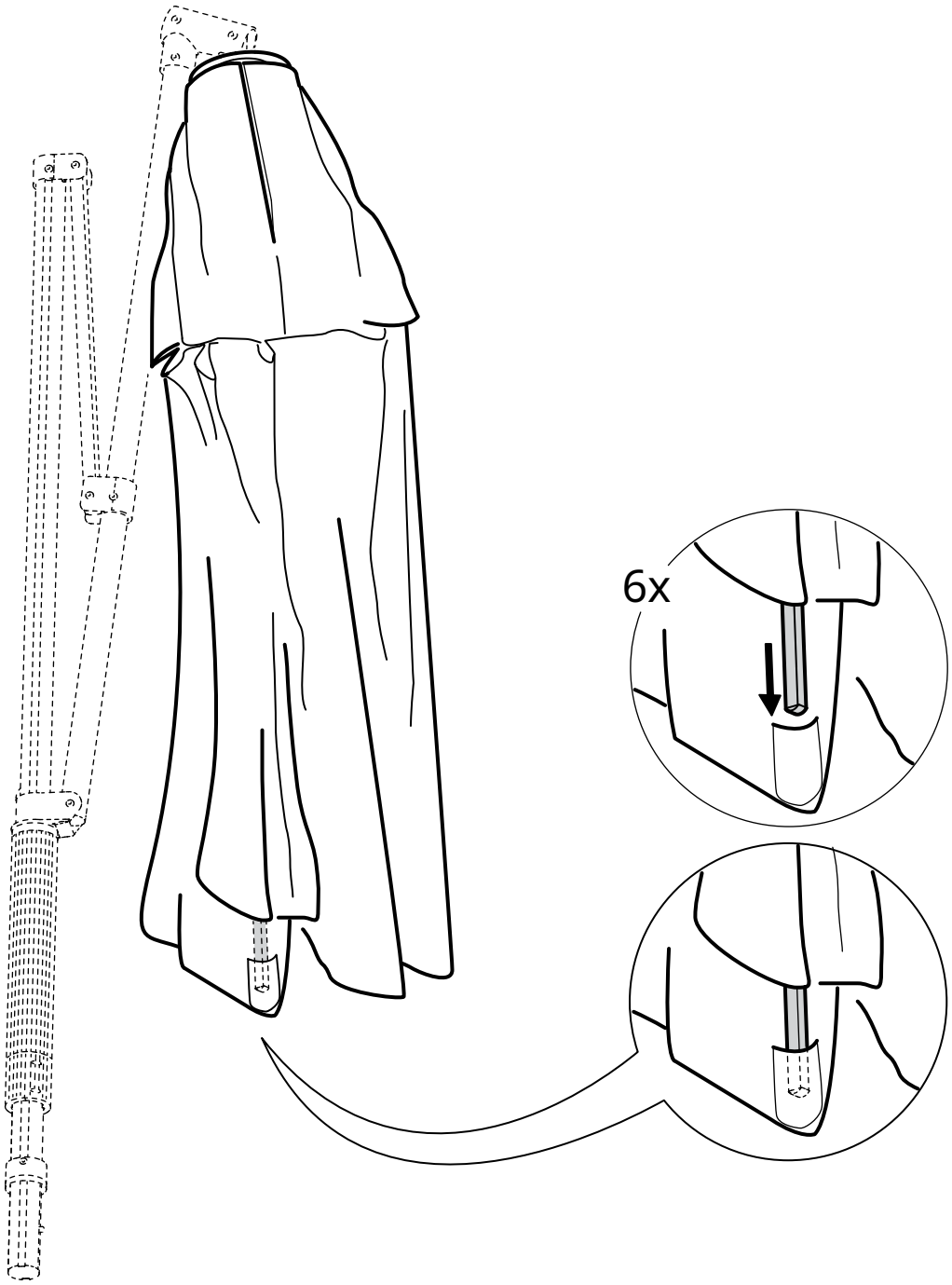

4

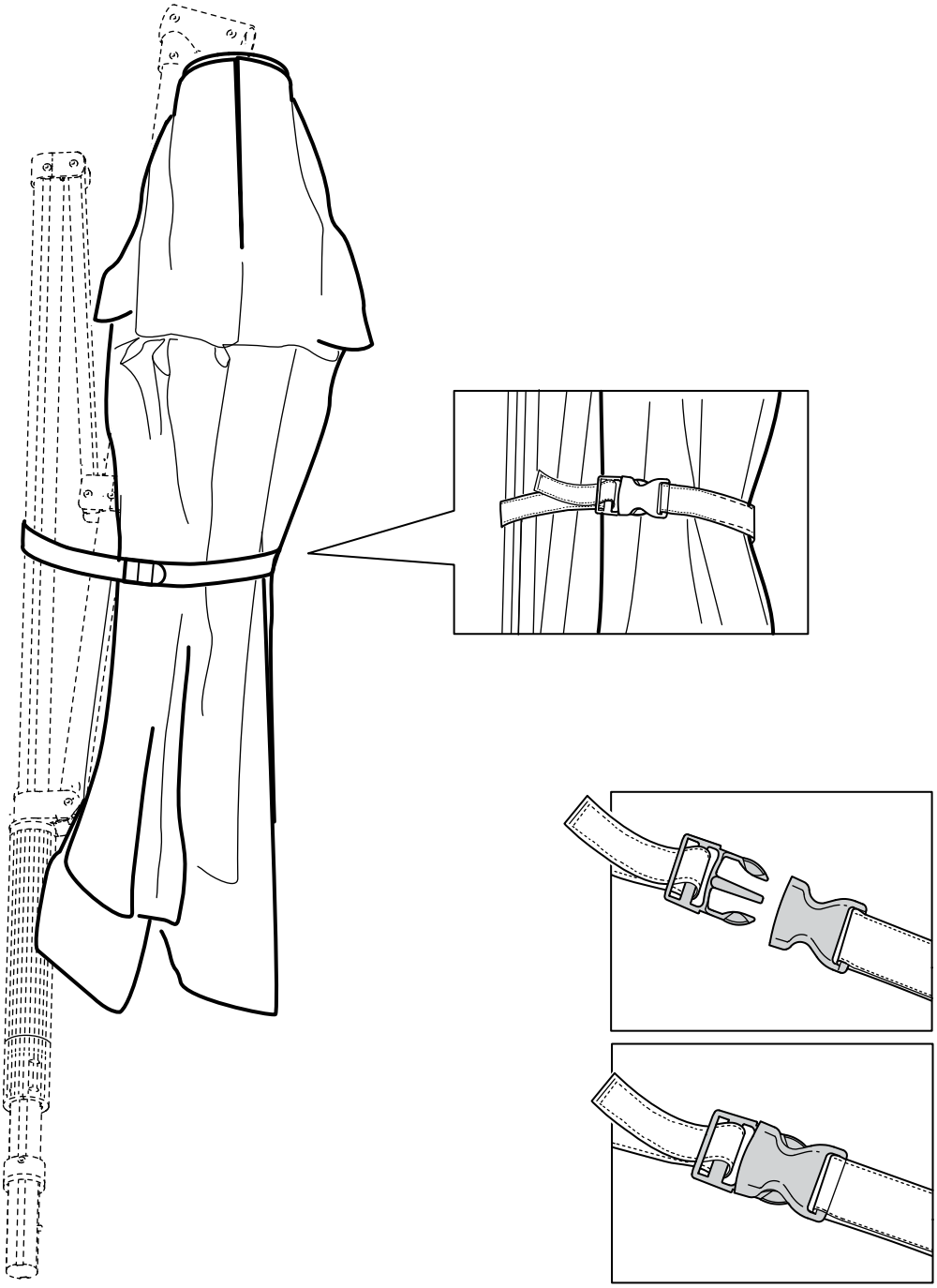

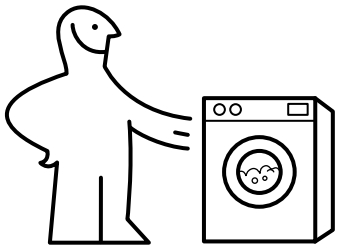

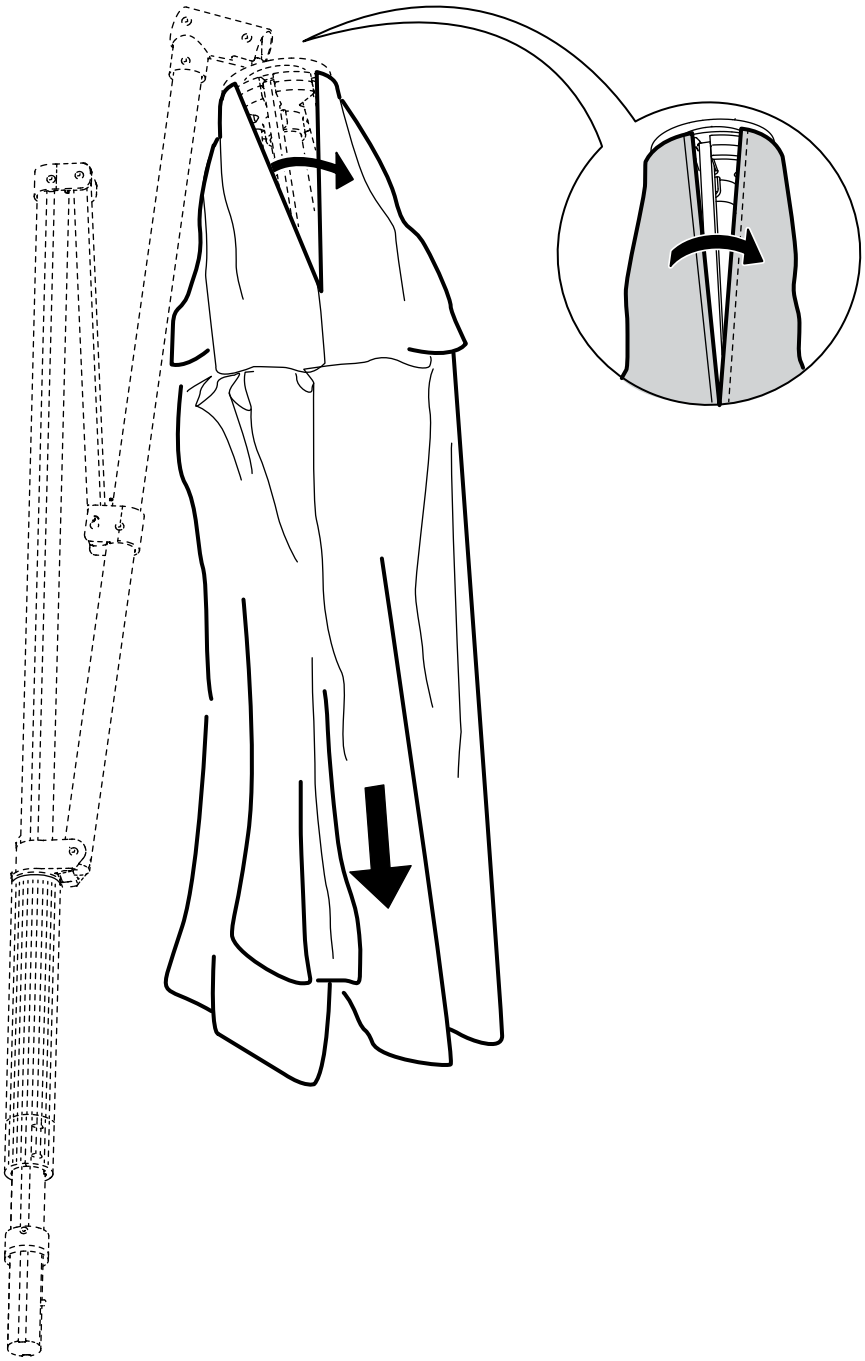

© Inter IKEA Systems B.V. 2019