ASPAREN

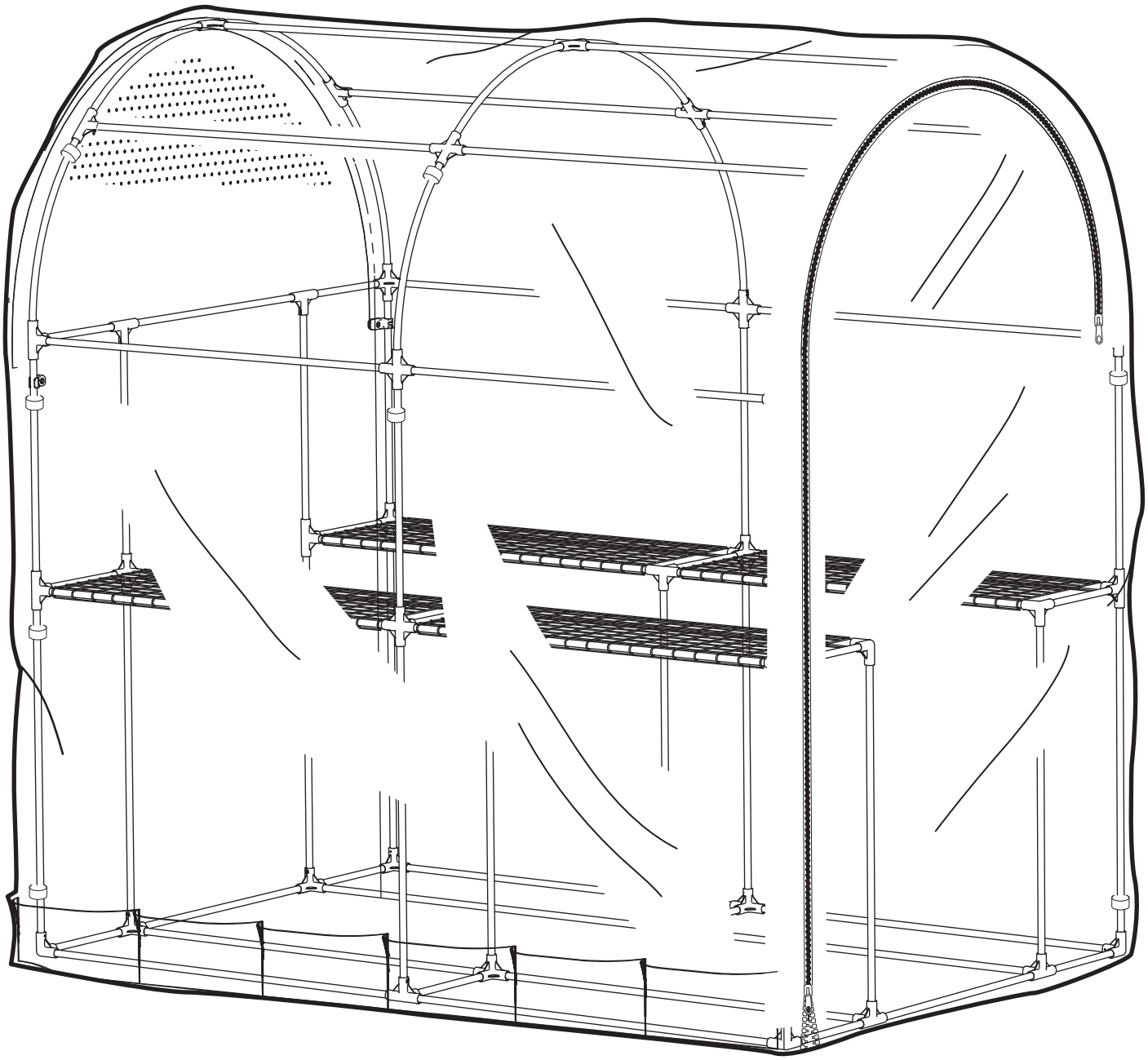

Design and Quality
IKEA of Sweden

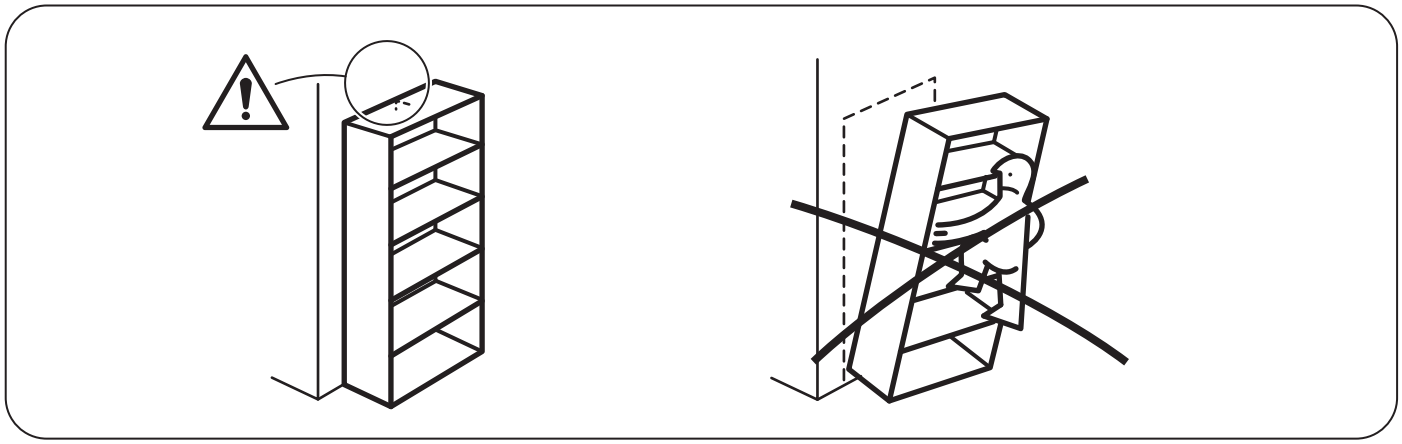

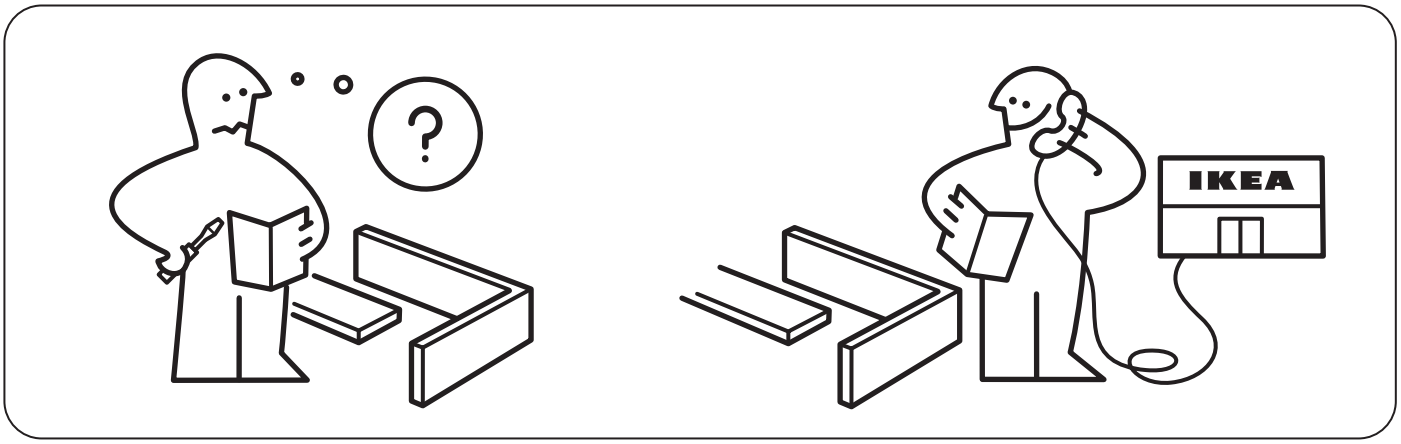

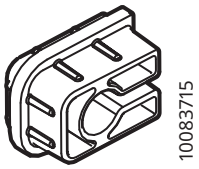

2x

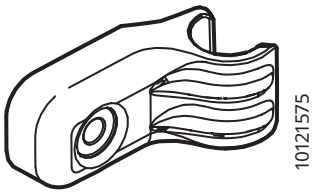

2x

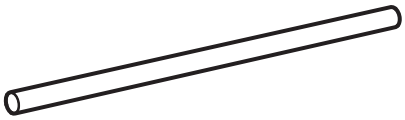

14x

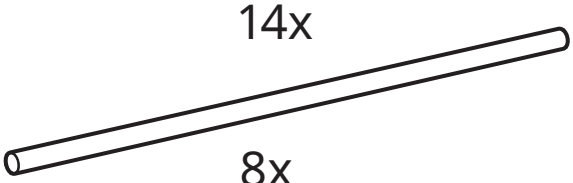

8x

12x

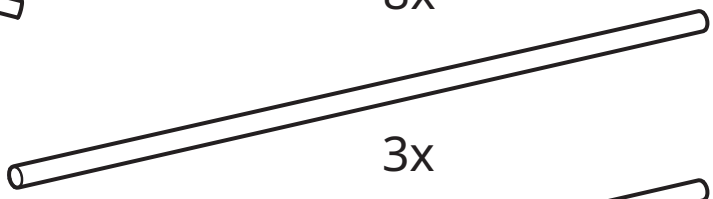

3x

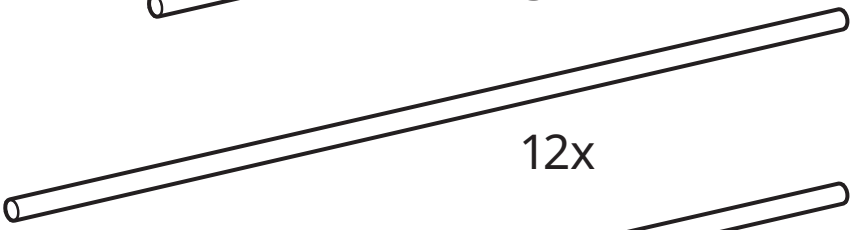

12x

26x

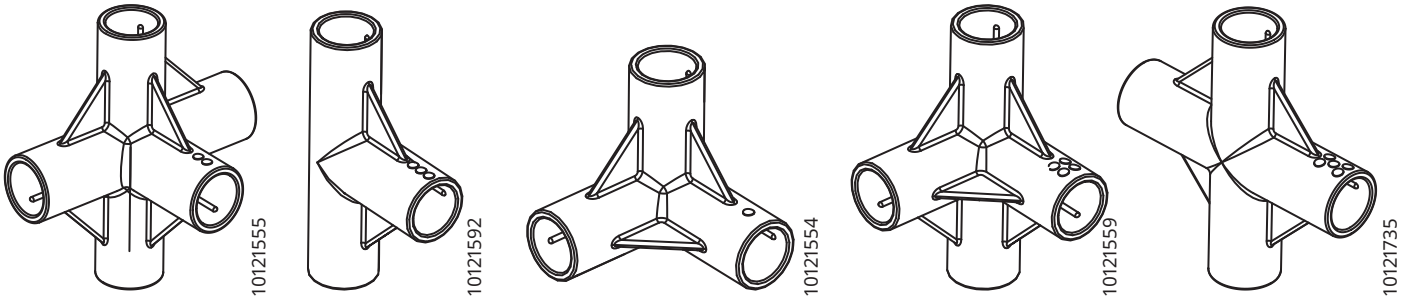
10121555
2x
10121592
10x
10121554
6x
10121559
18x
10121735
5x

1

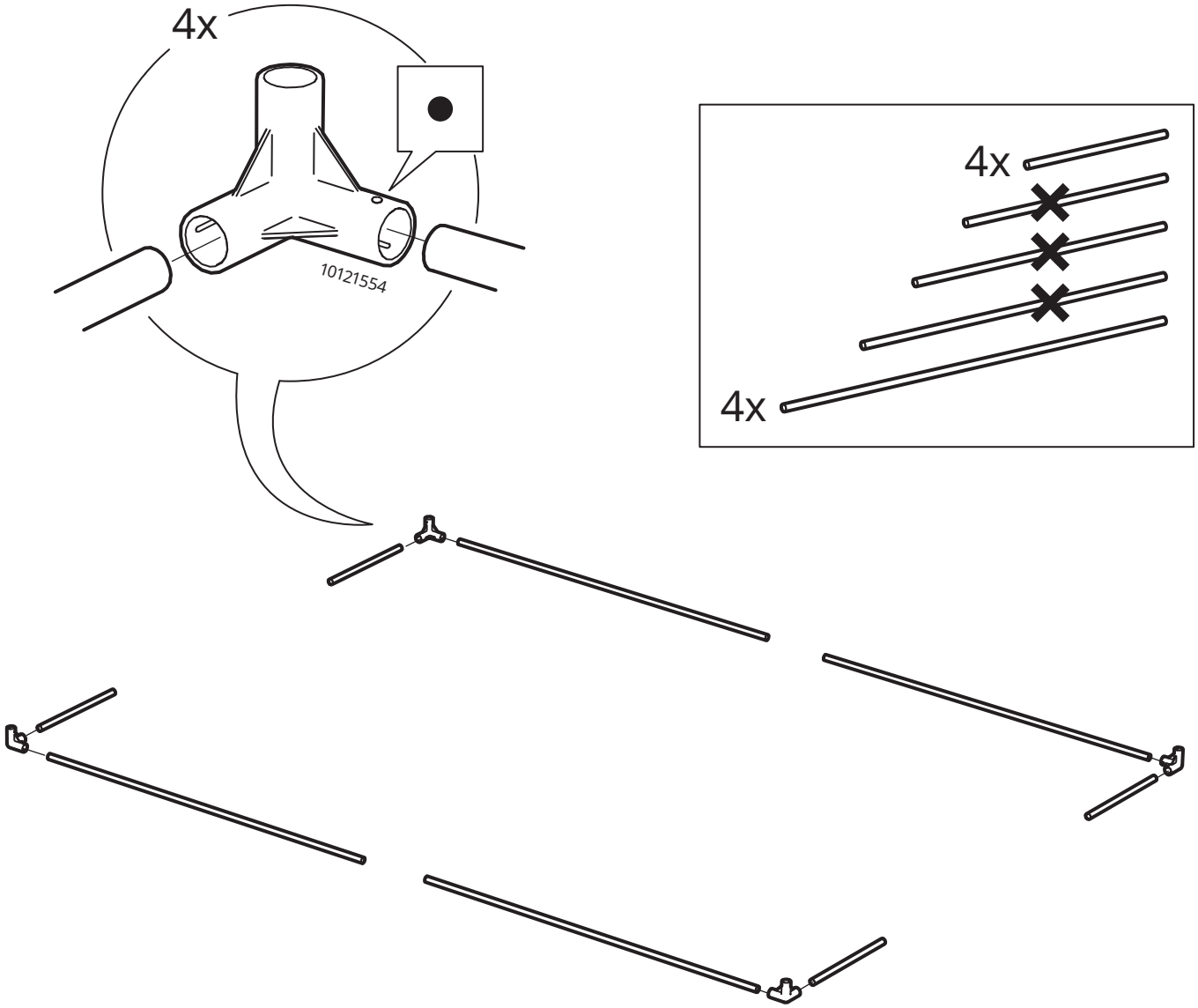
4x
10121554
4x
4x

2

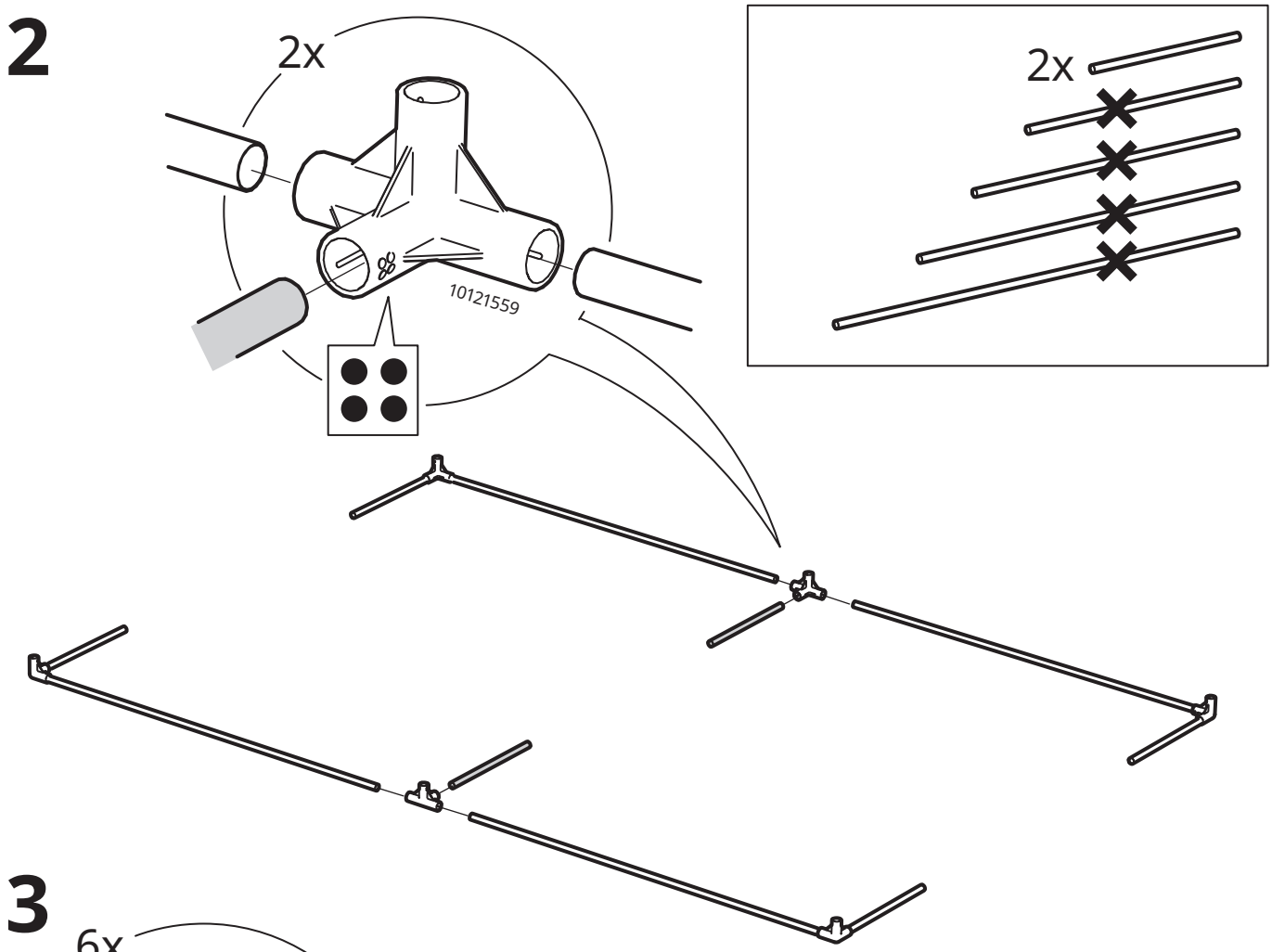

3

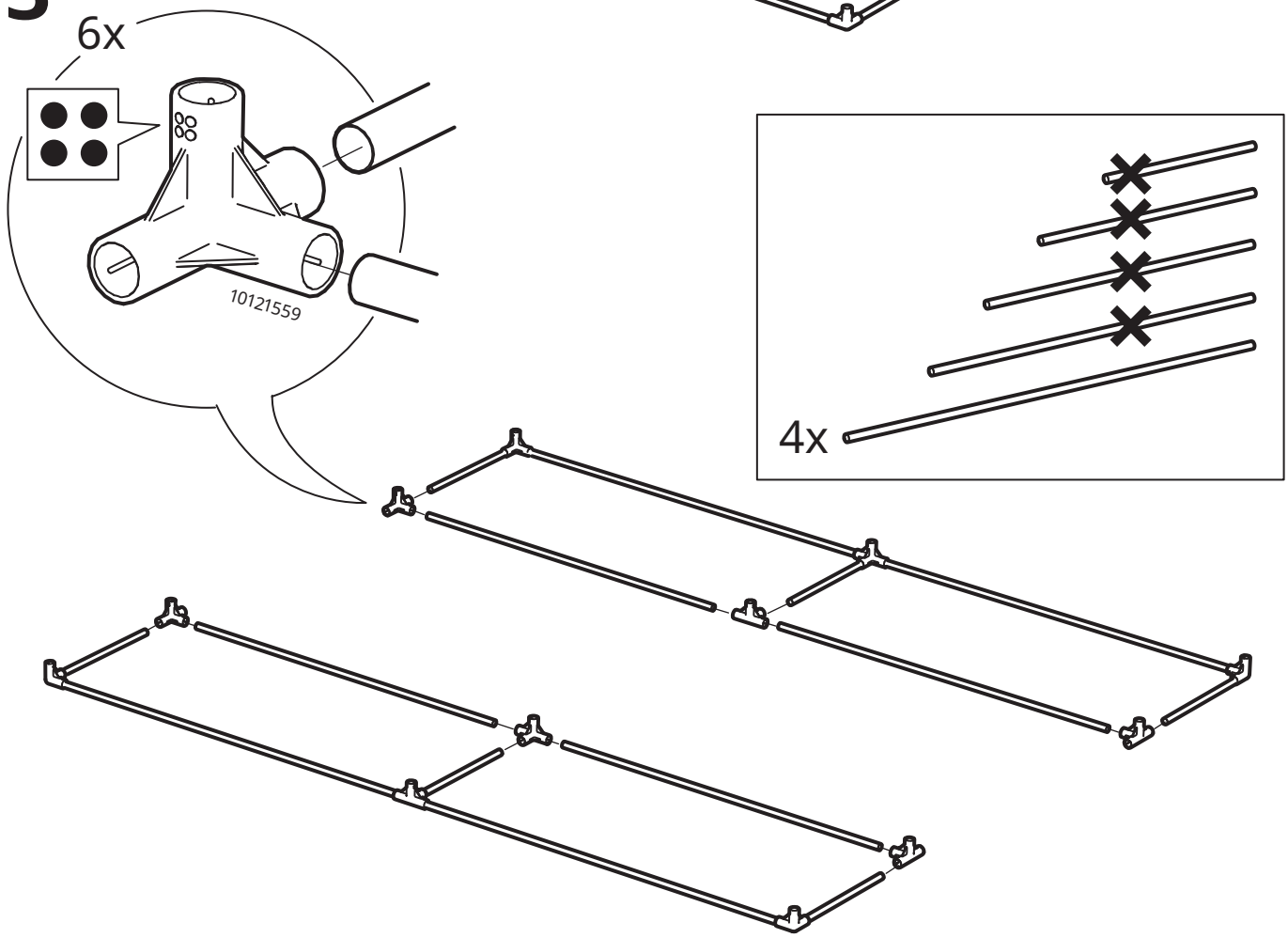

4

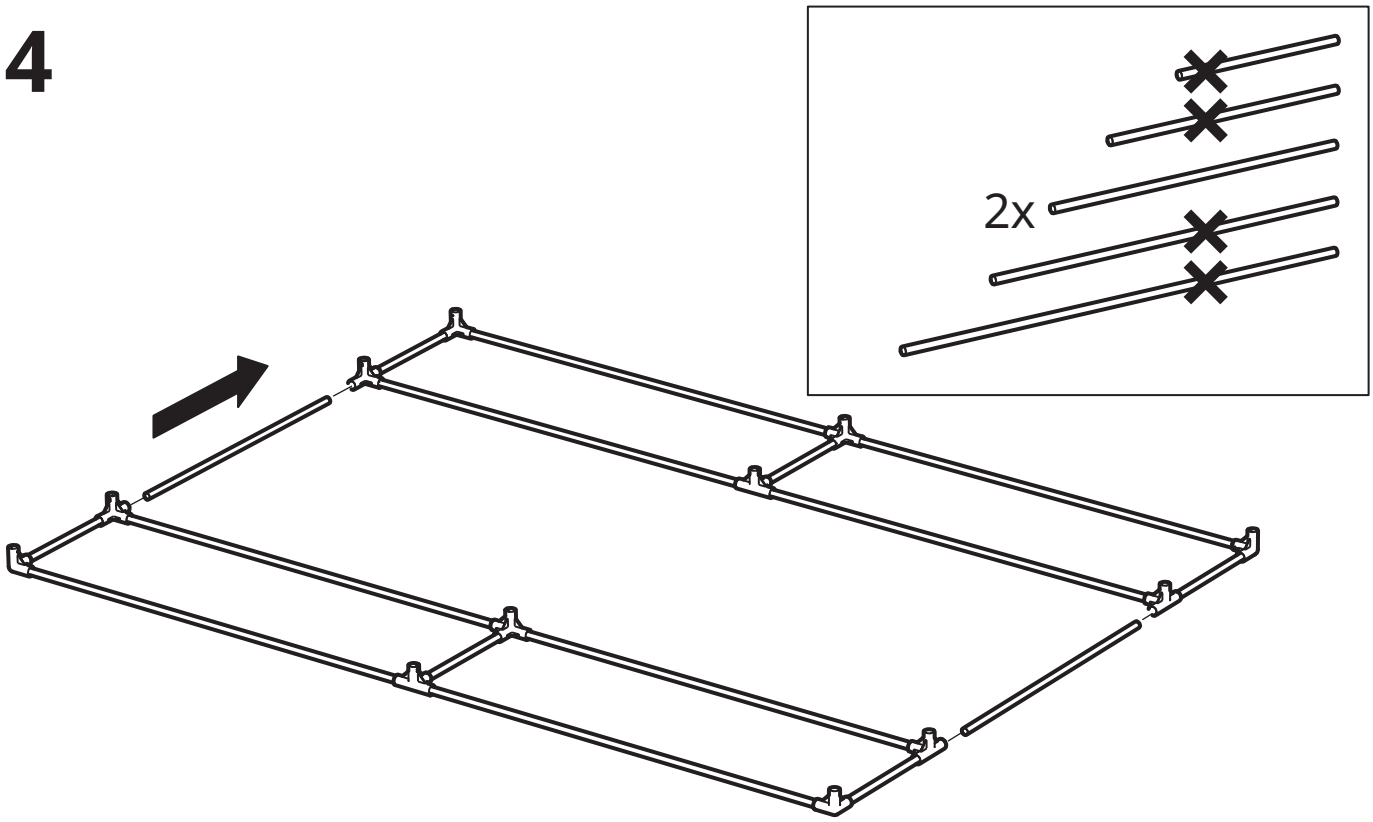

5

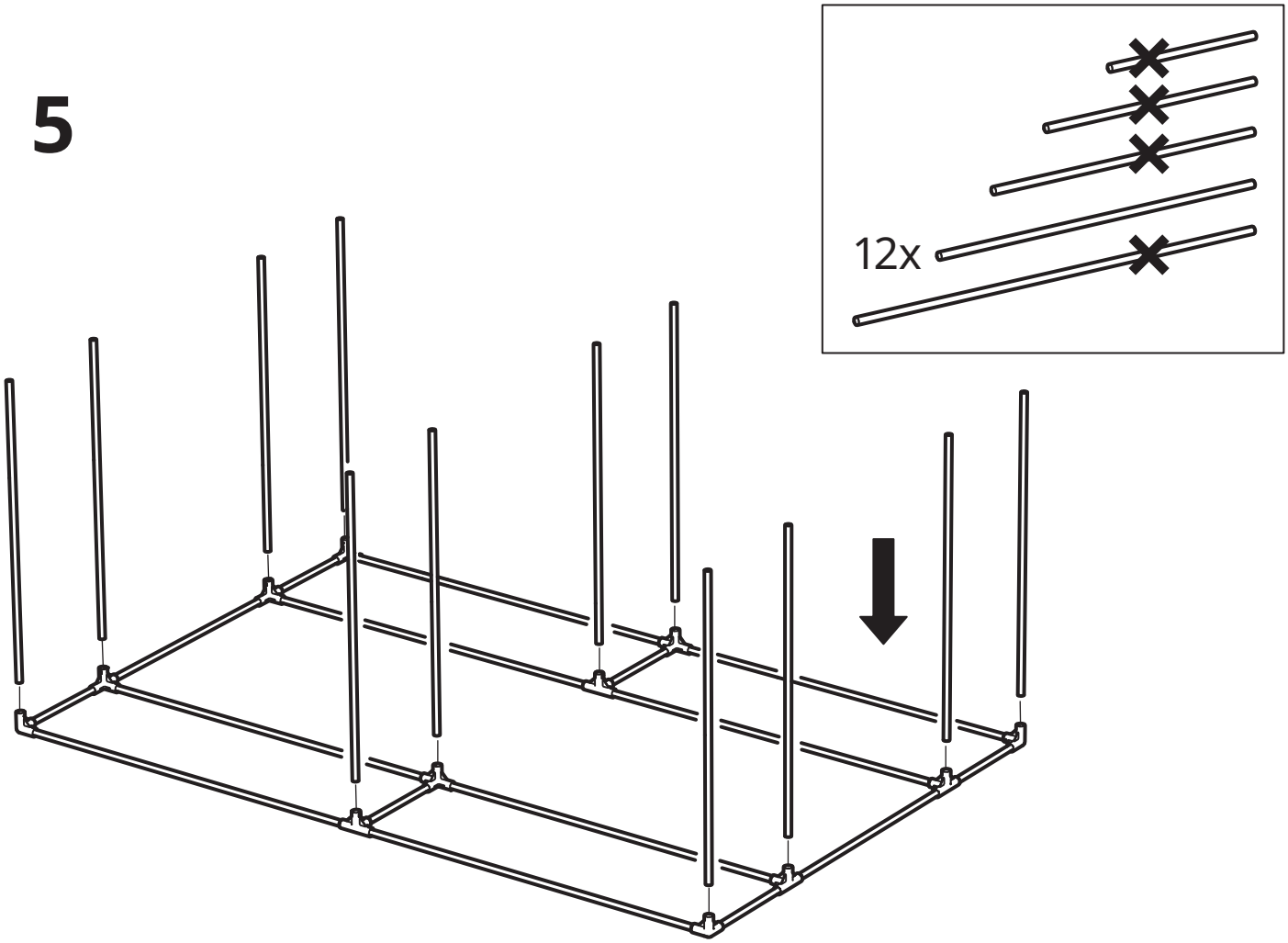

6

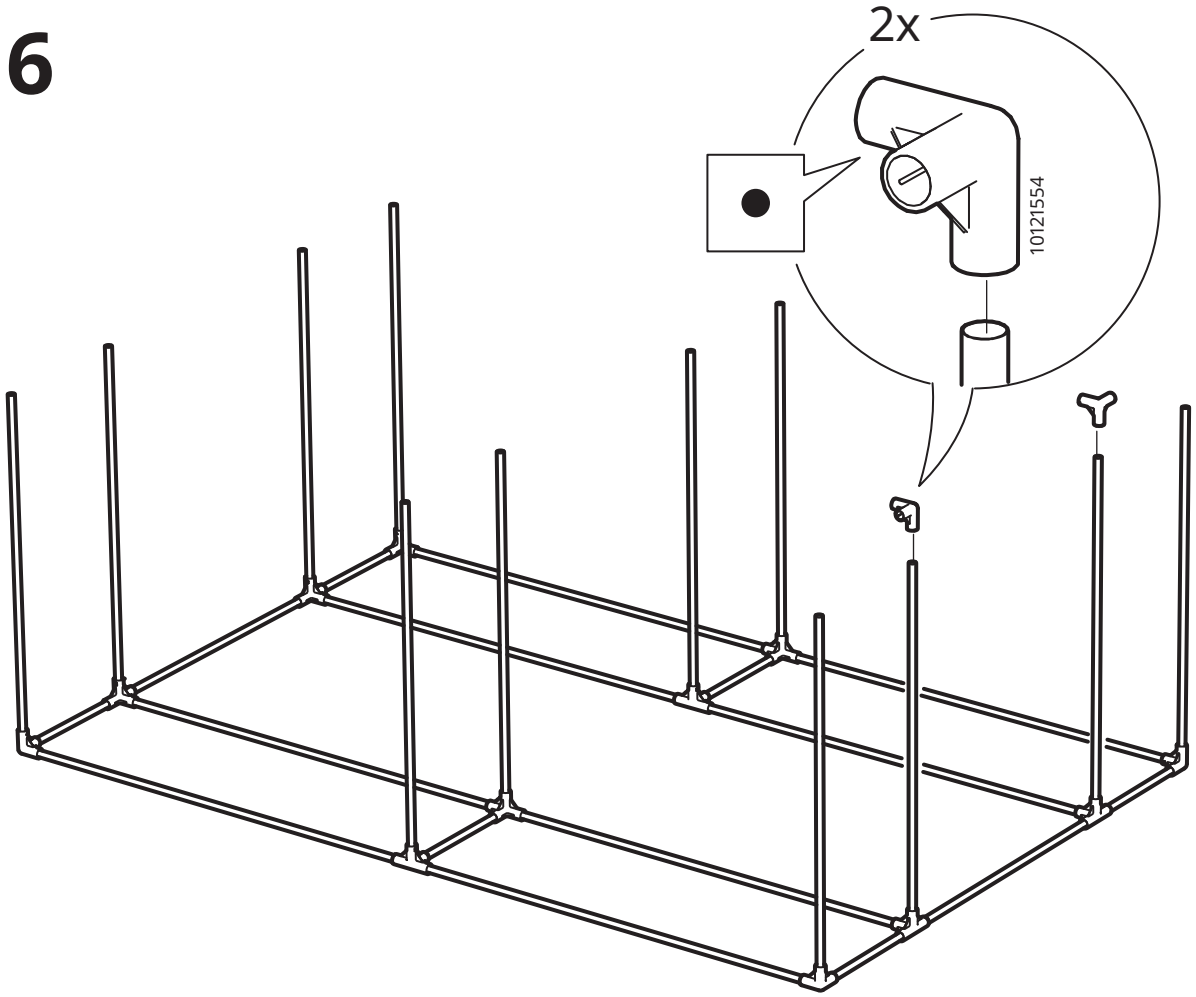

7

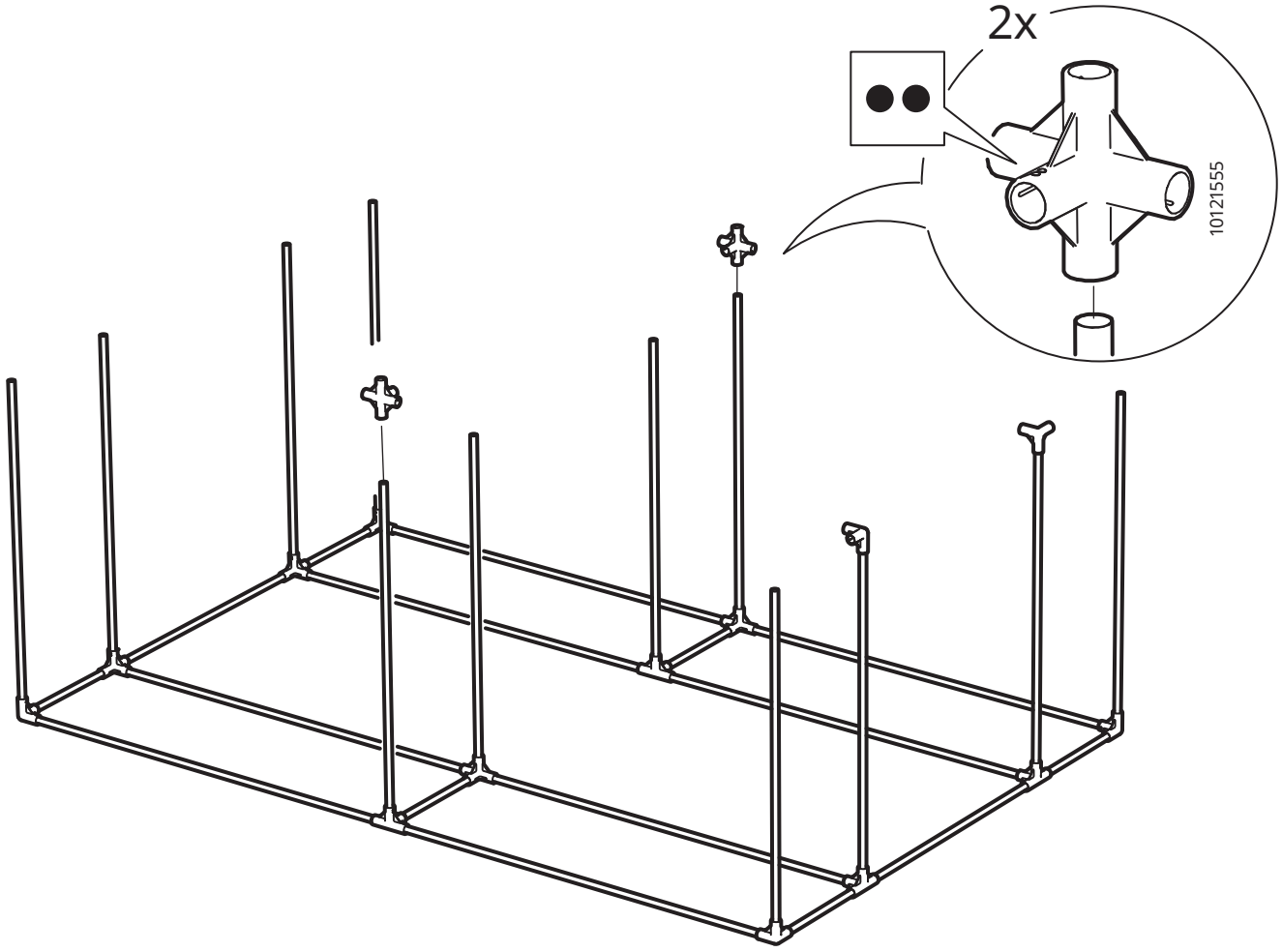

8

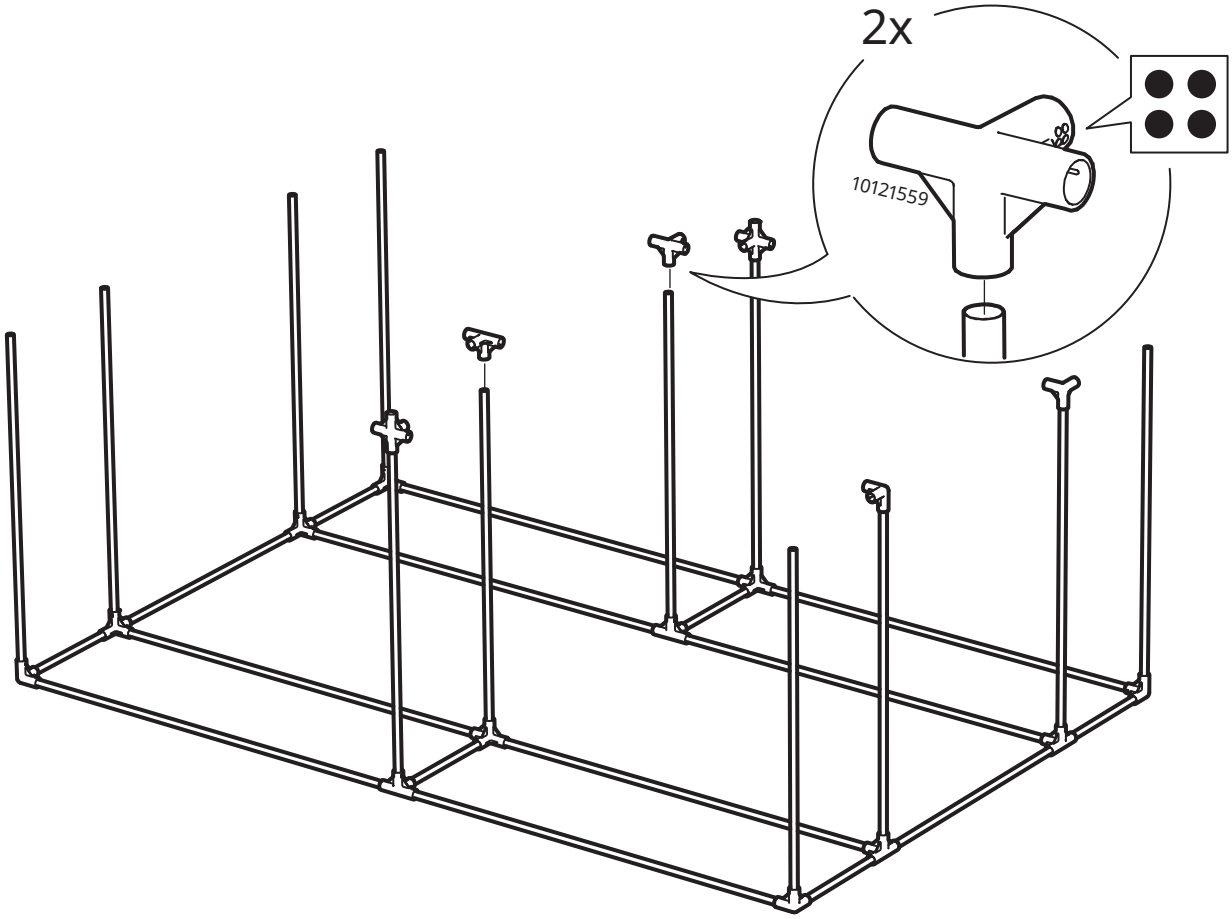

9

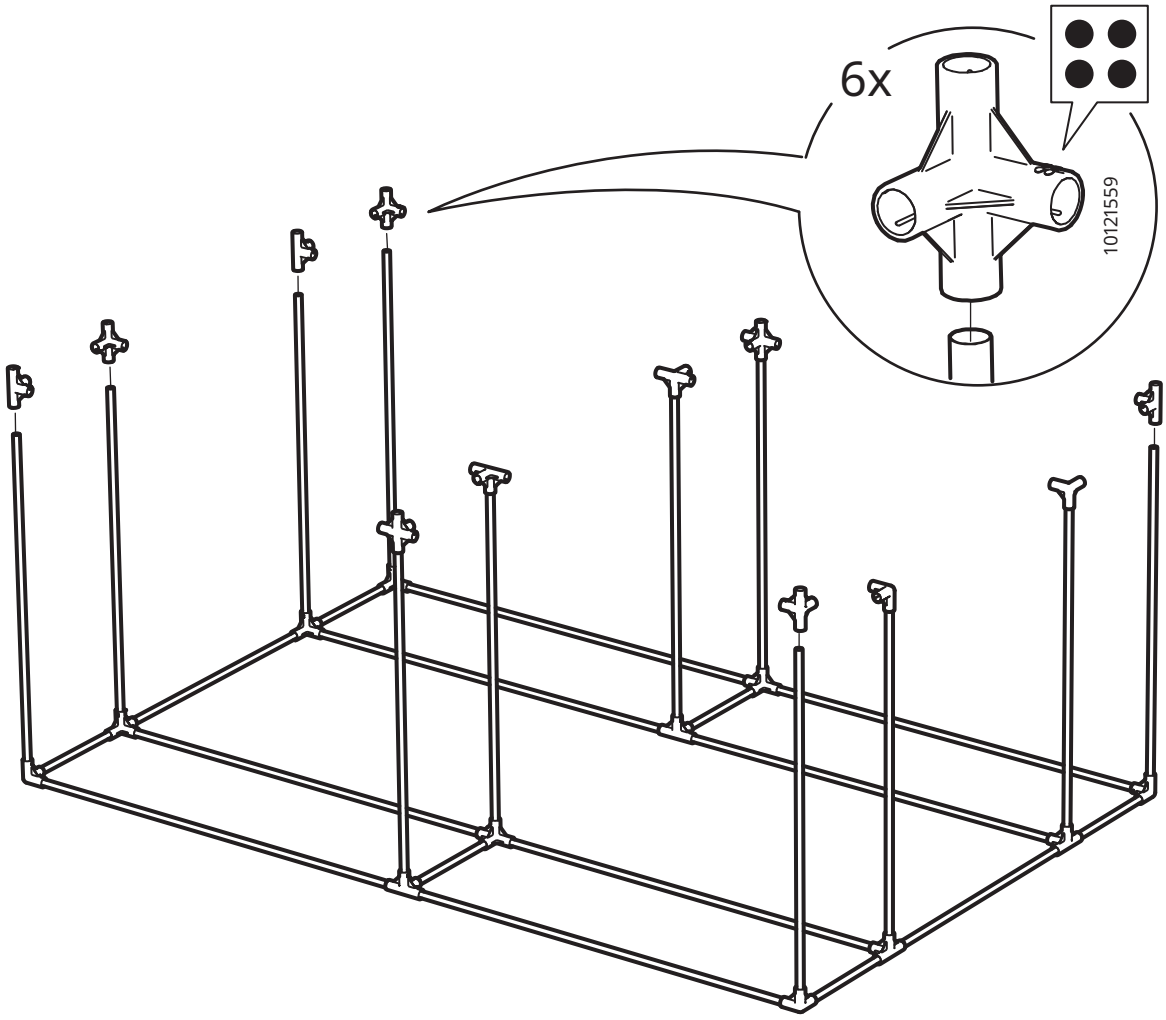

10

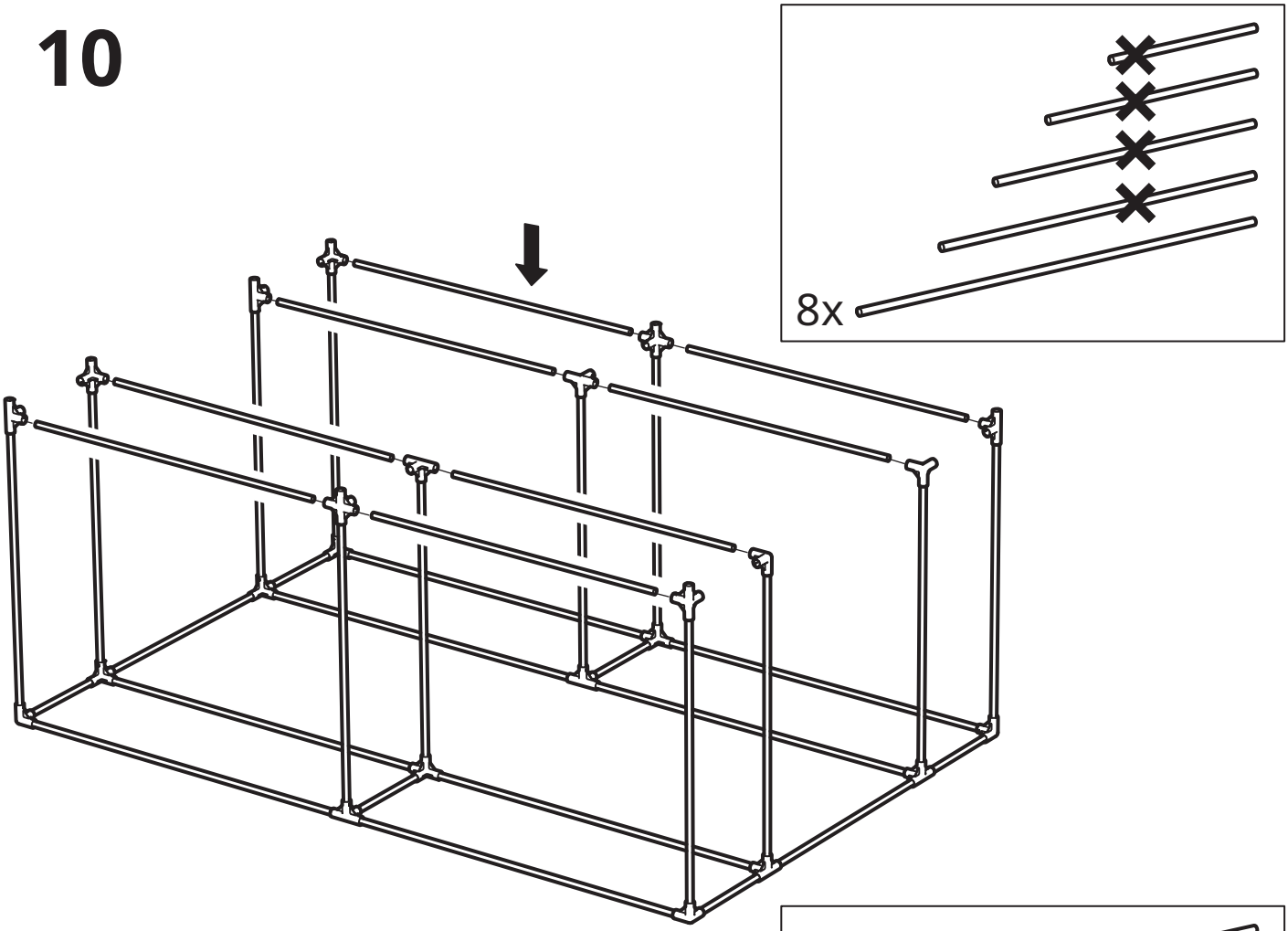

11

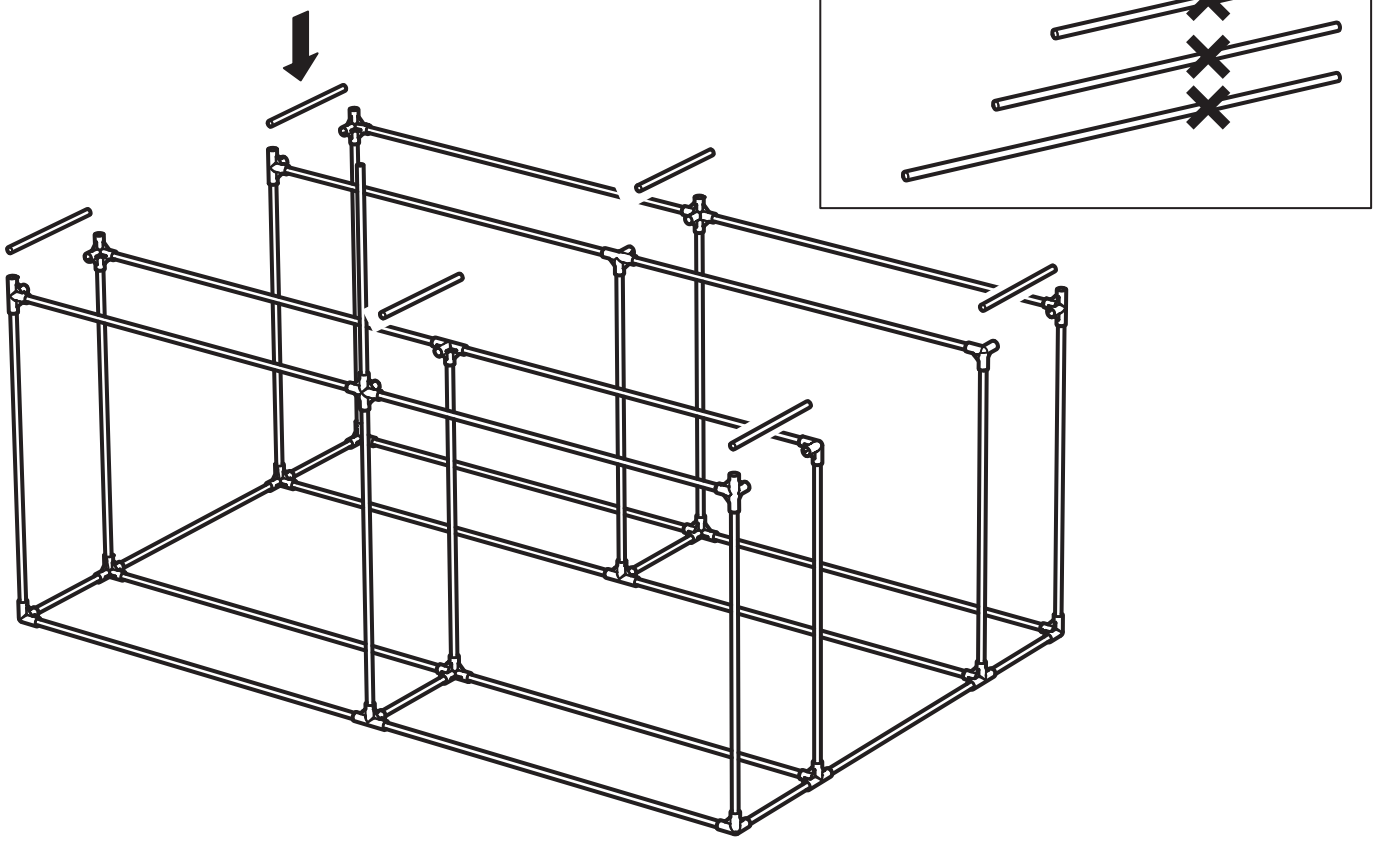

12

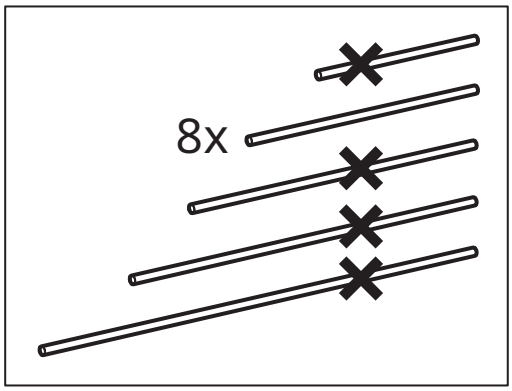

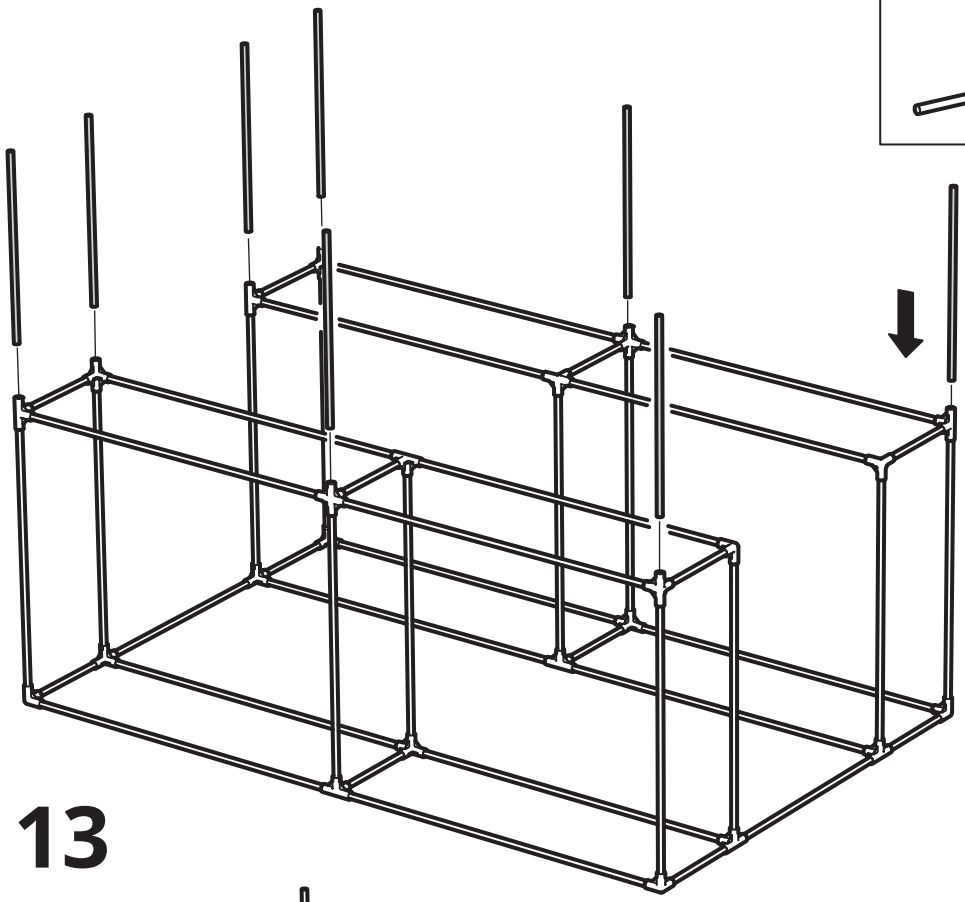

13

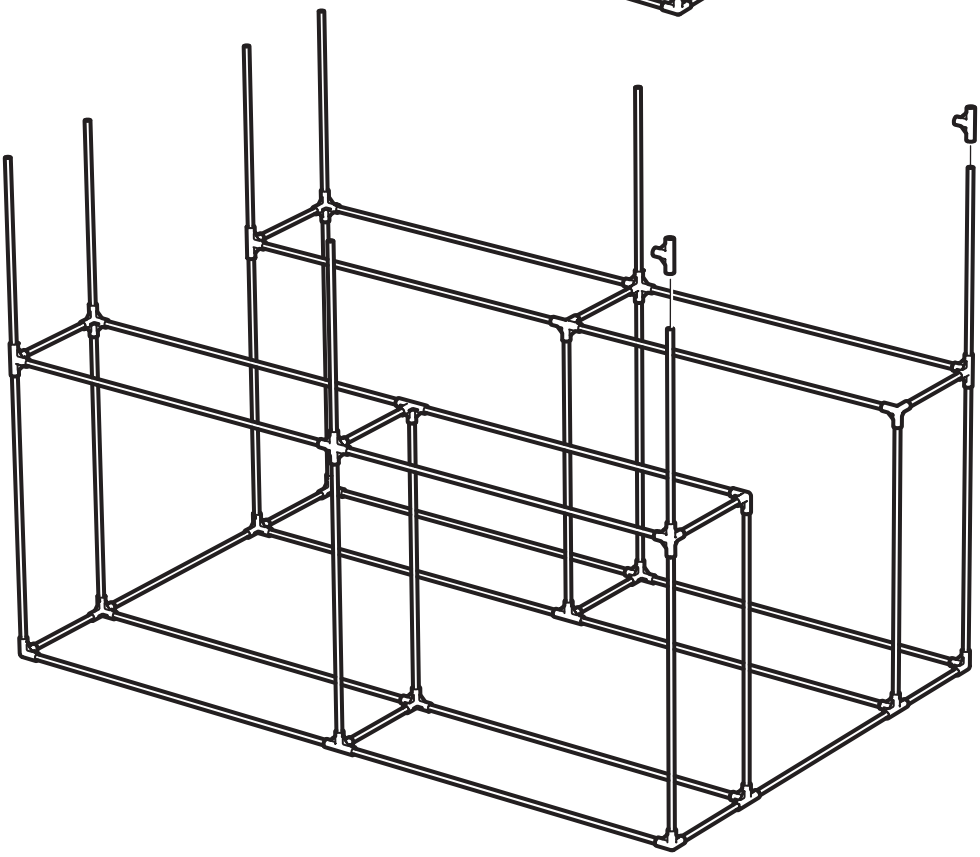

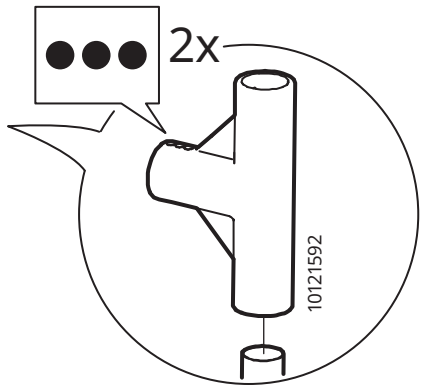

14

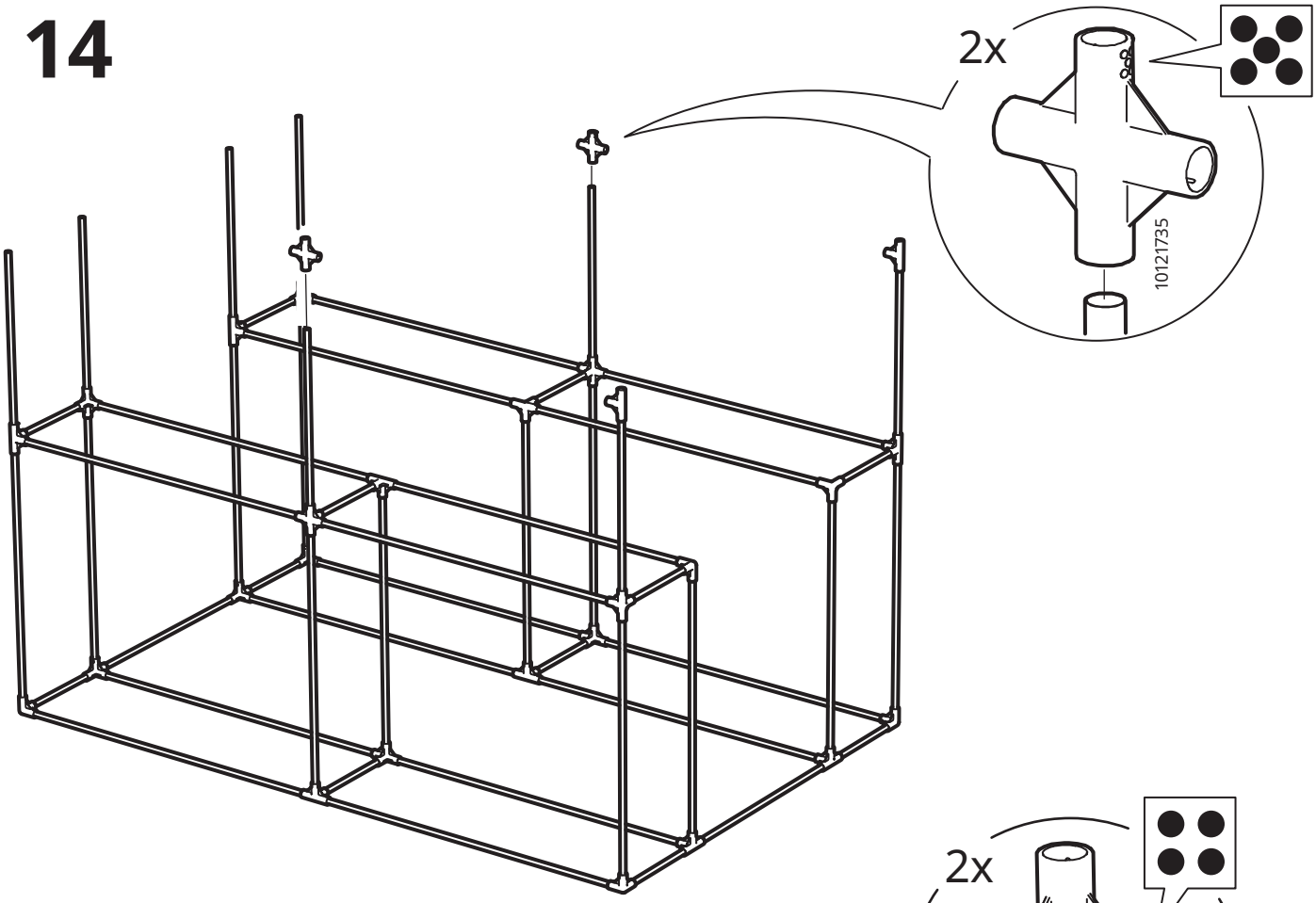

15

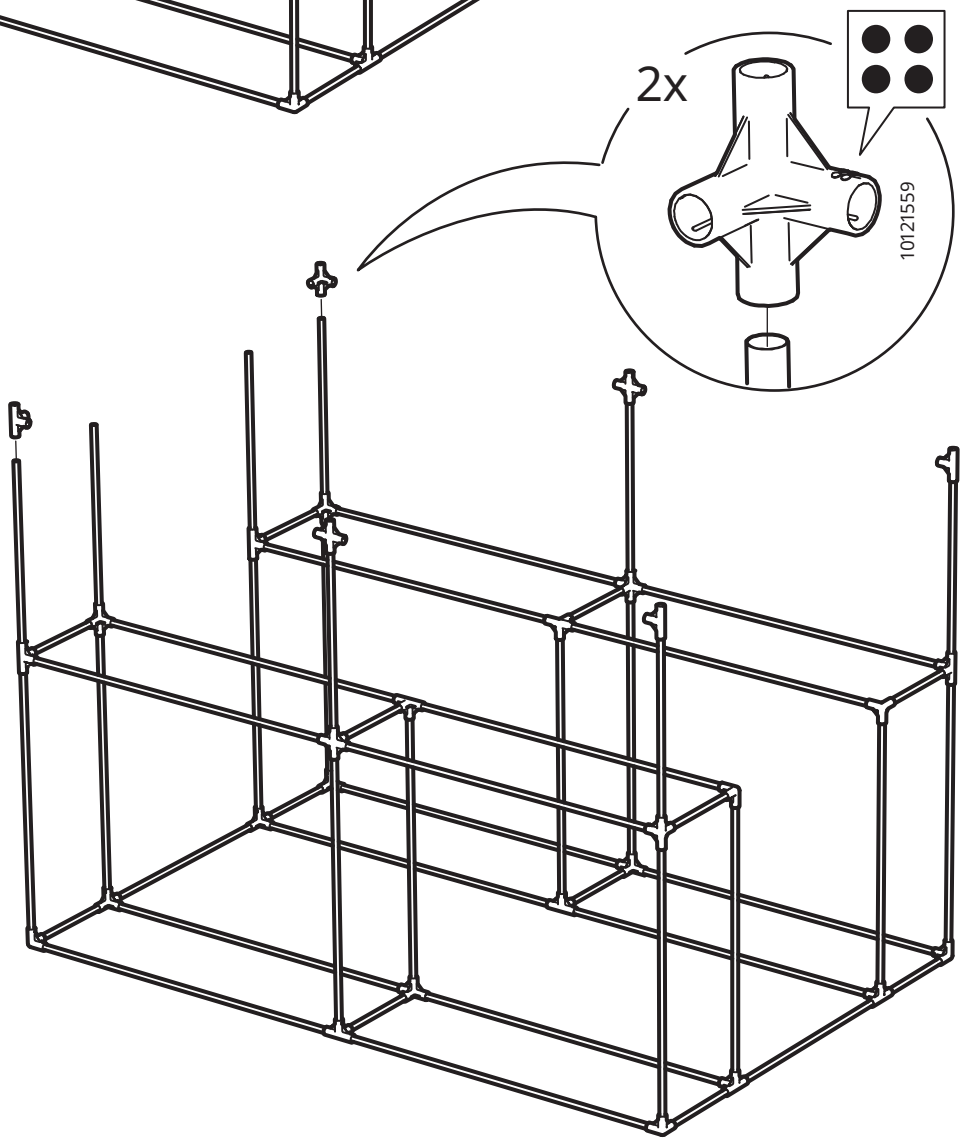

16

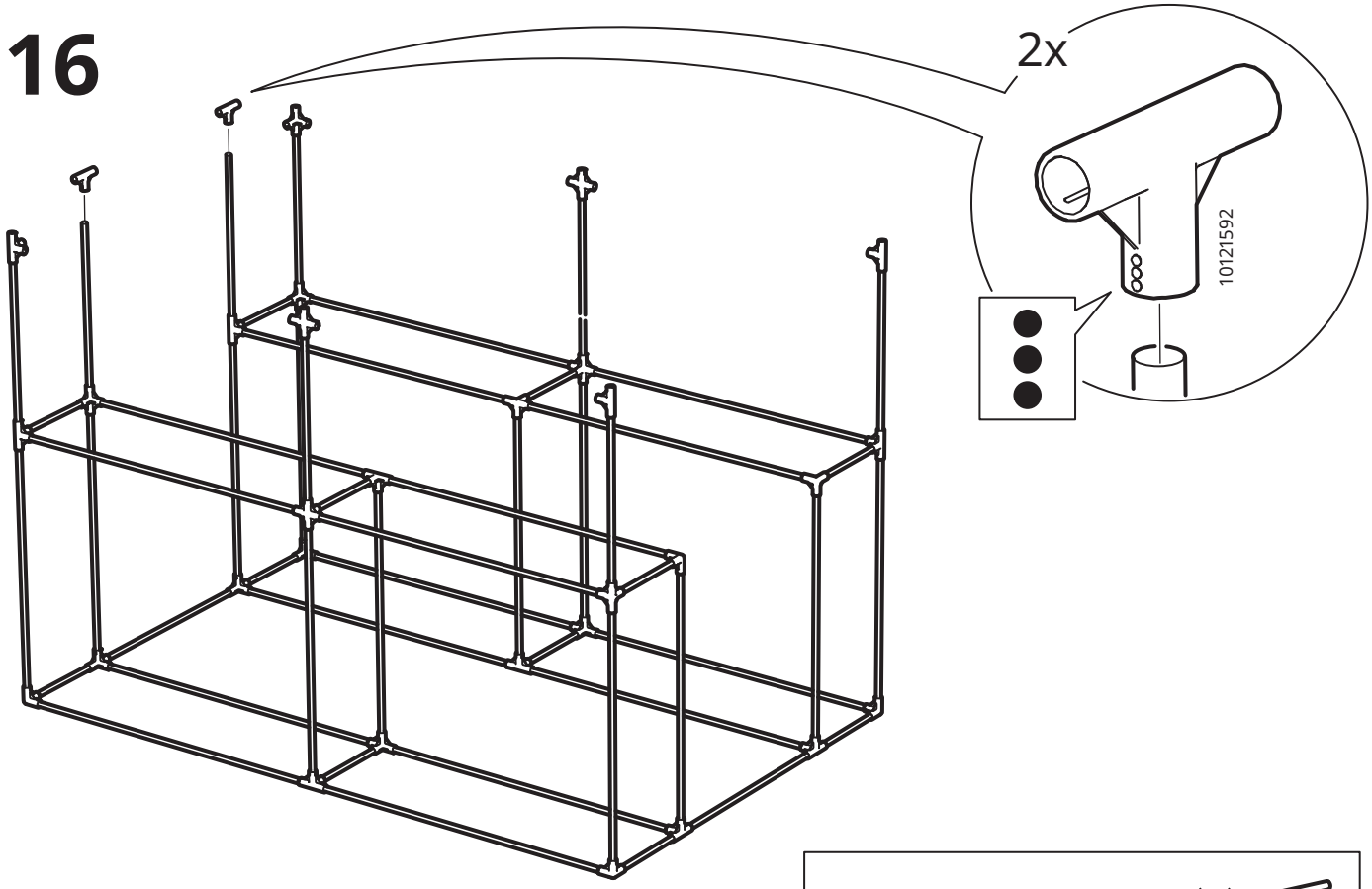

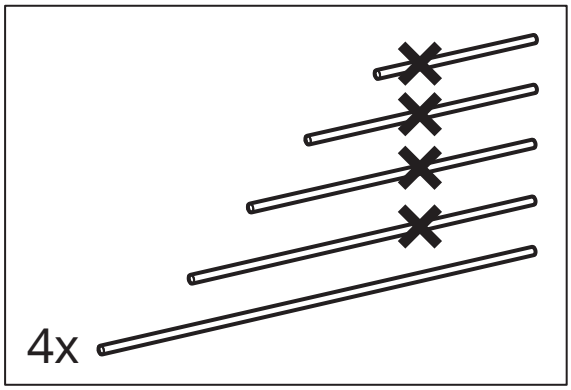

17

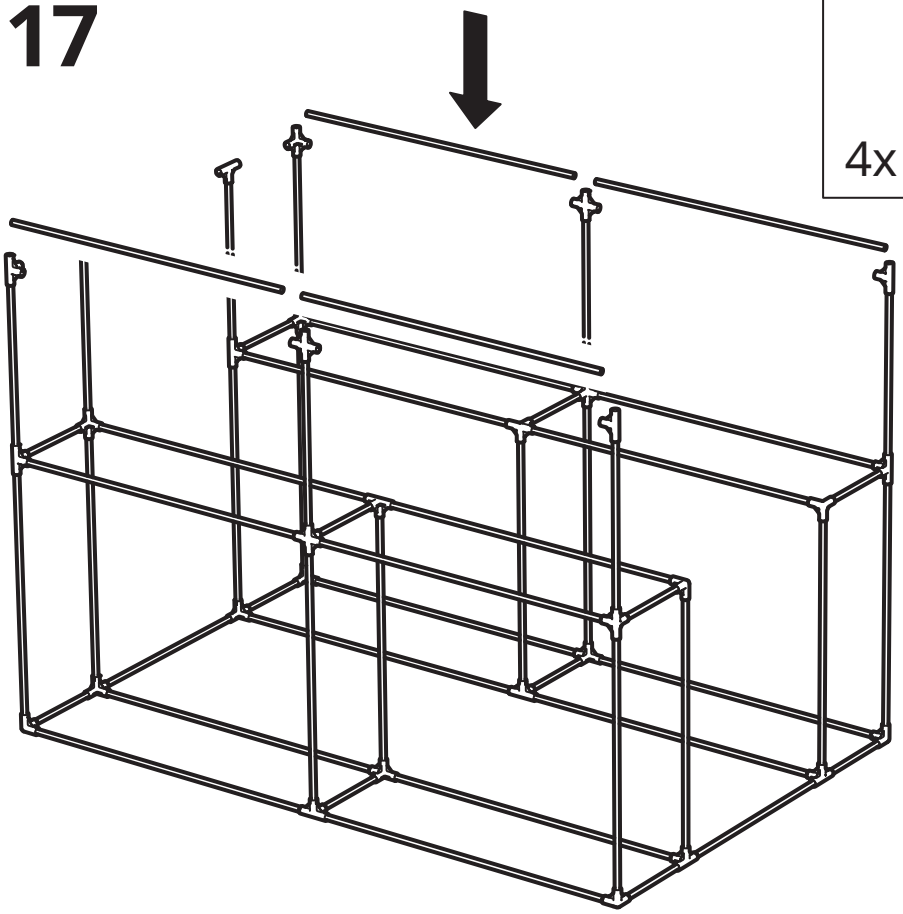

18

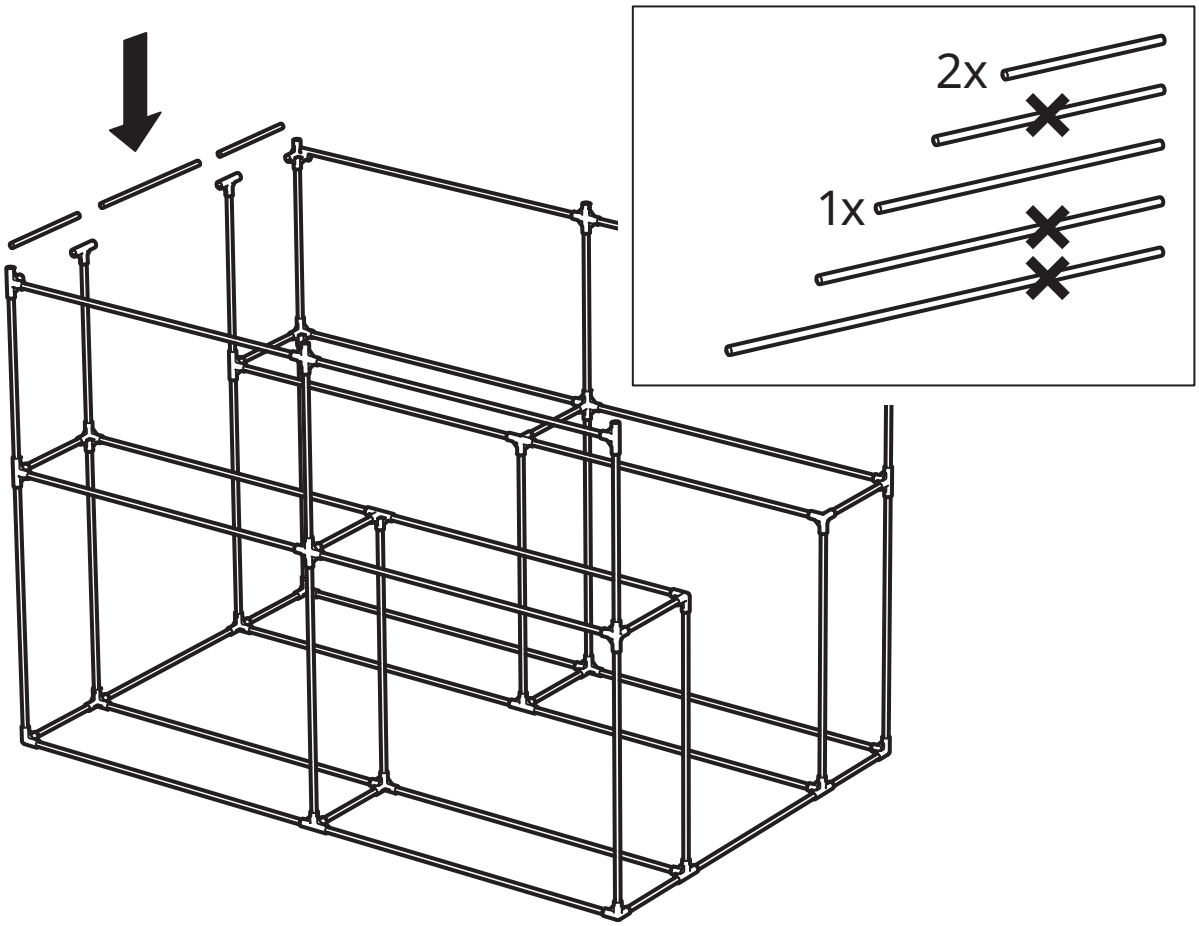

19

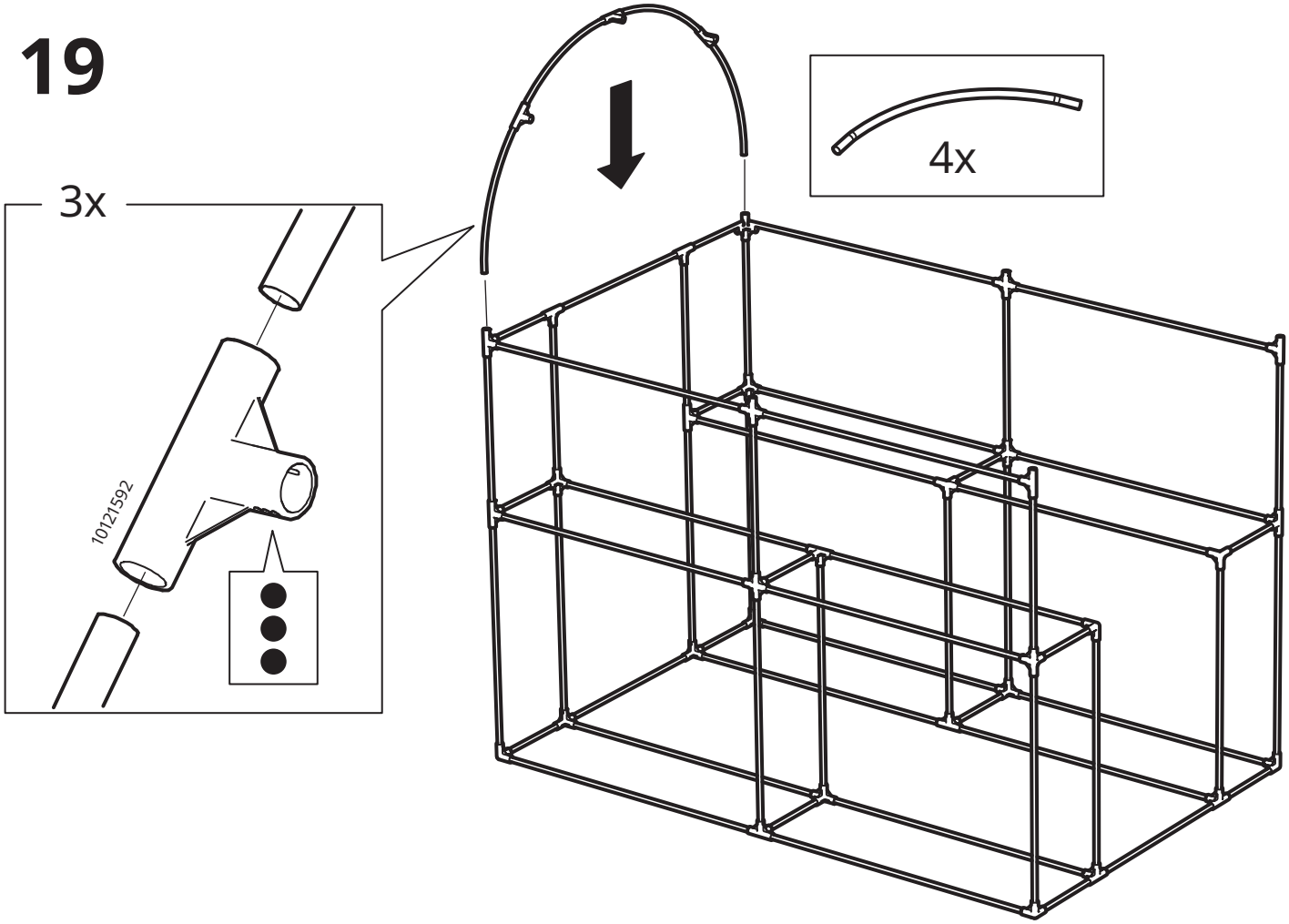

20

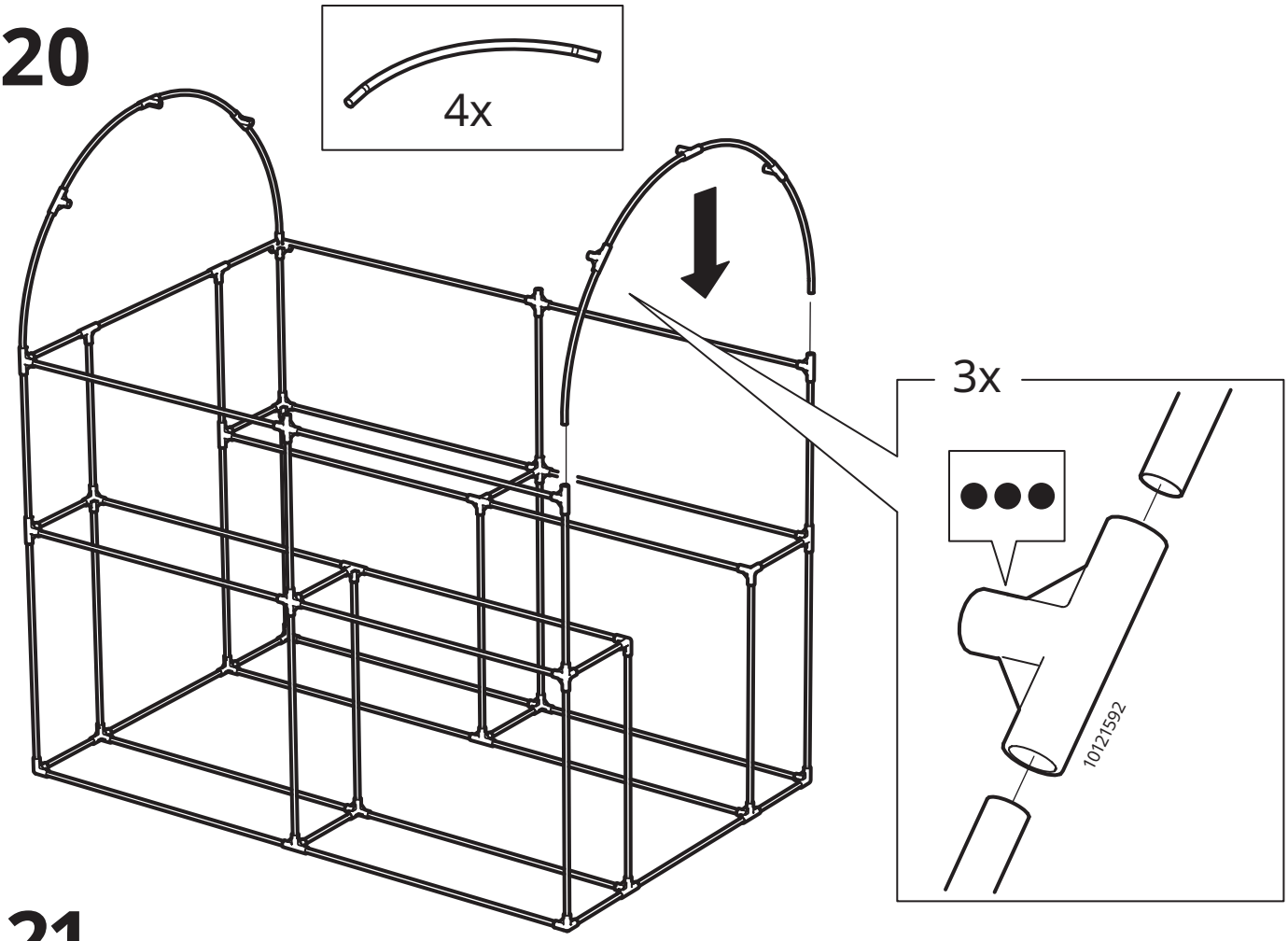

21

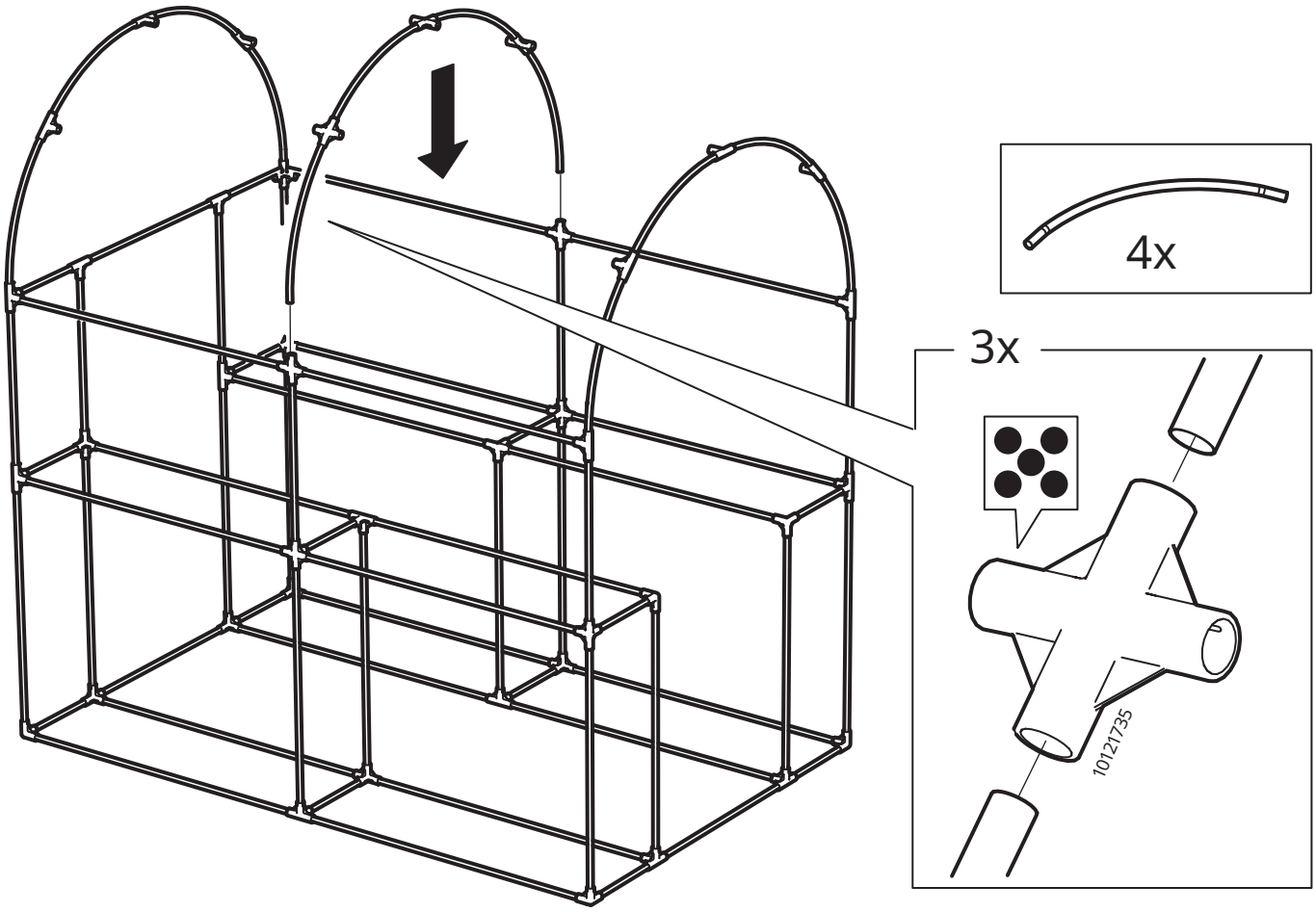

22

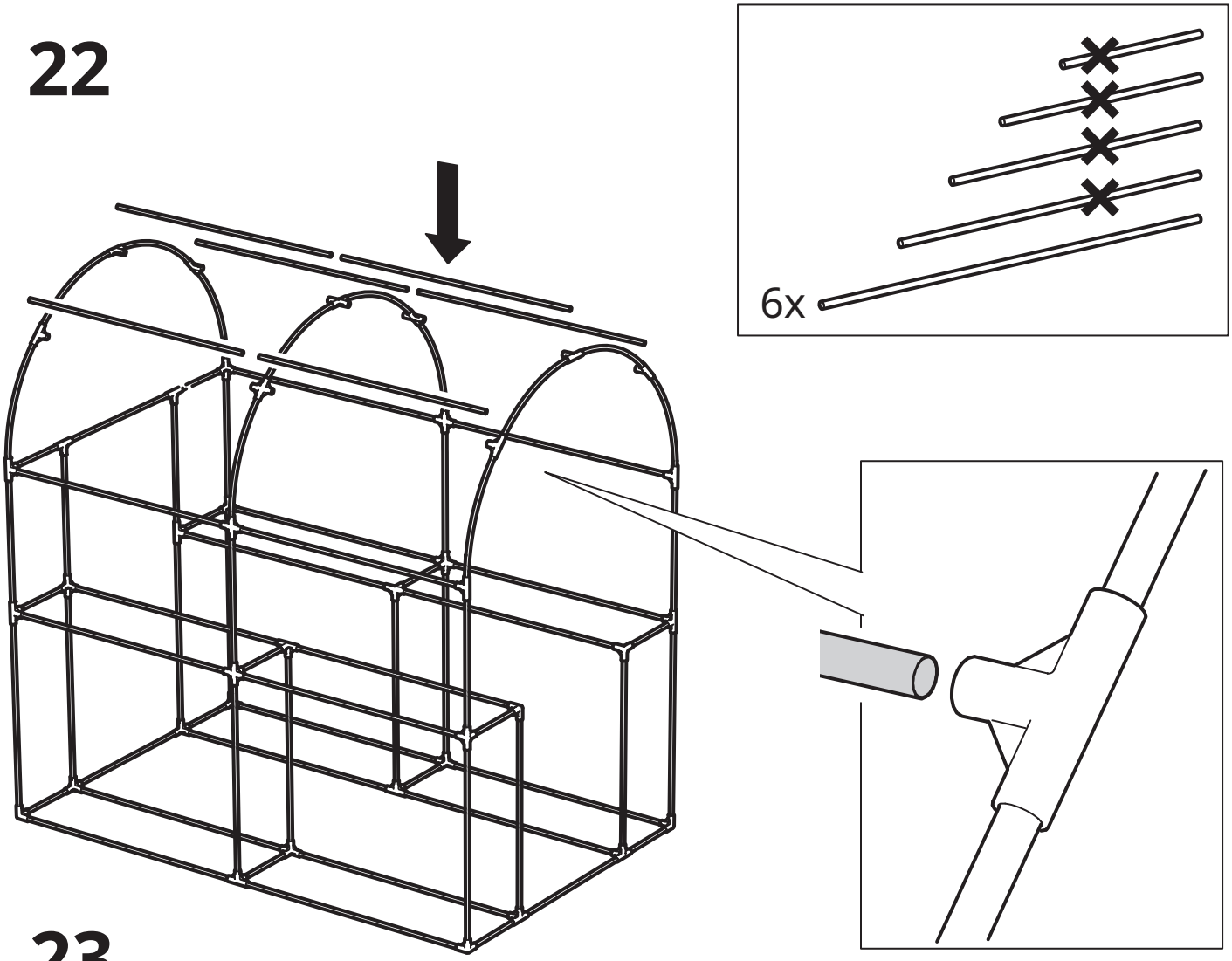

23

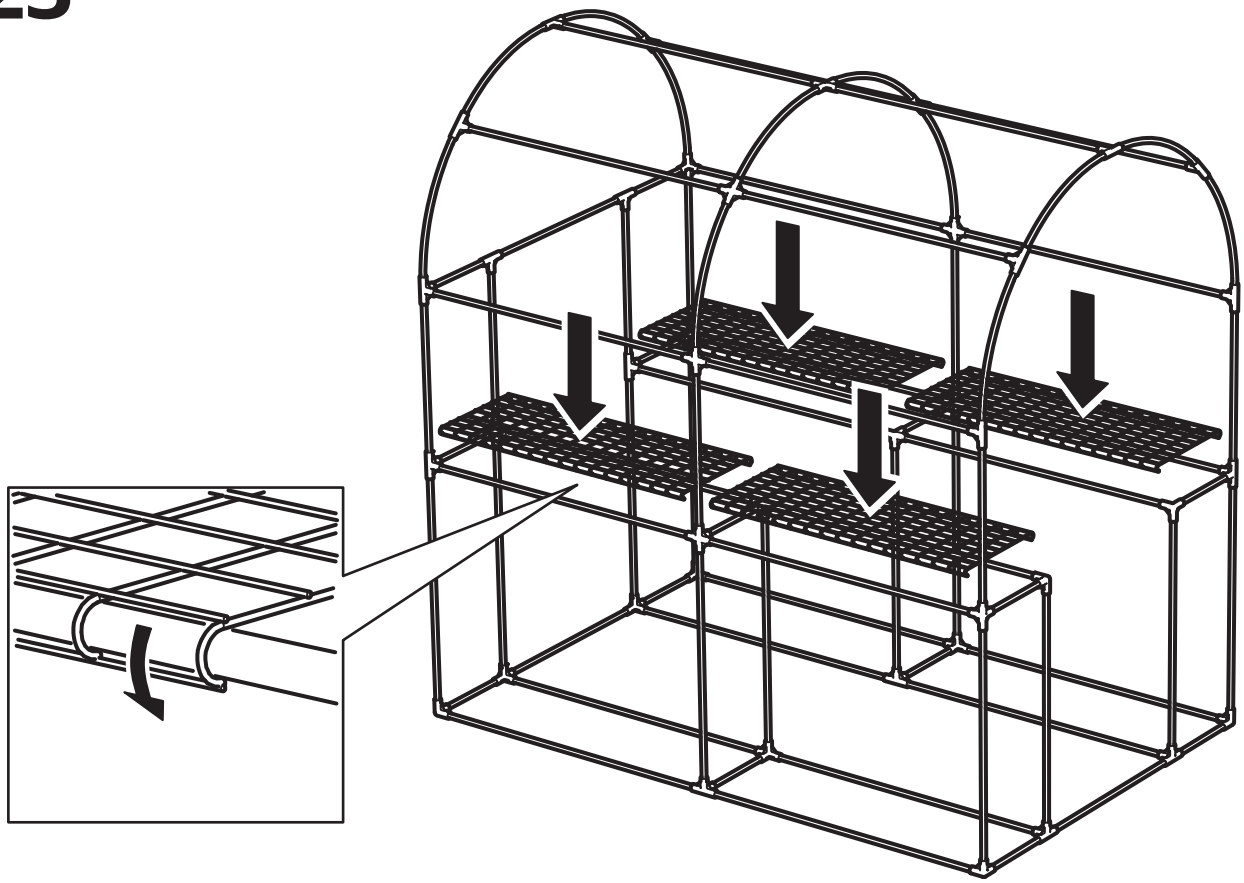

24

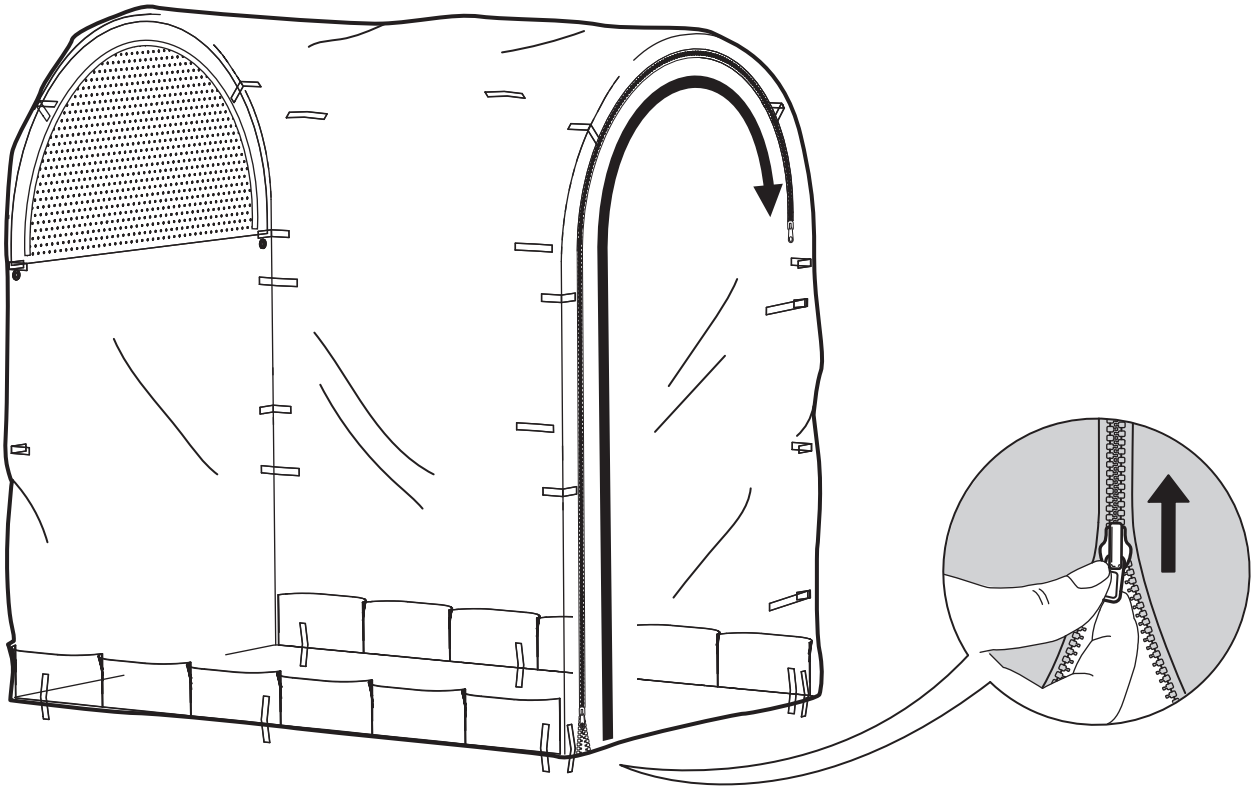

25

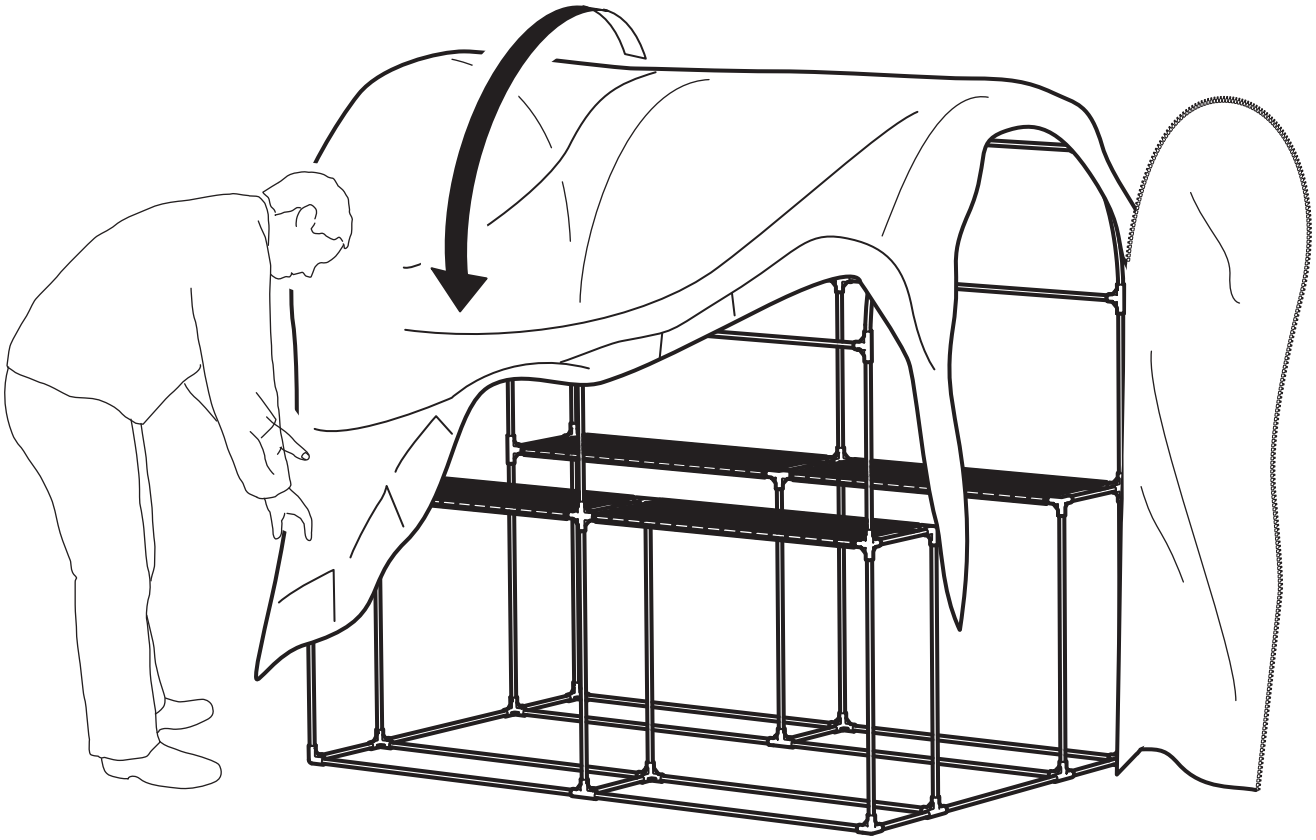

26

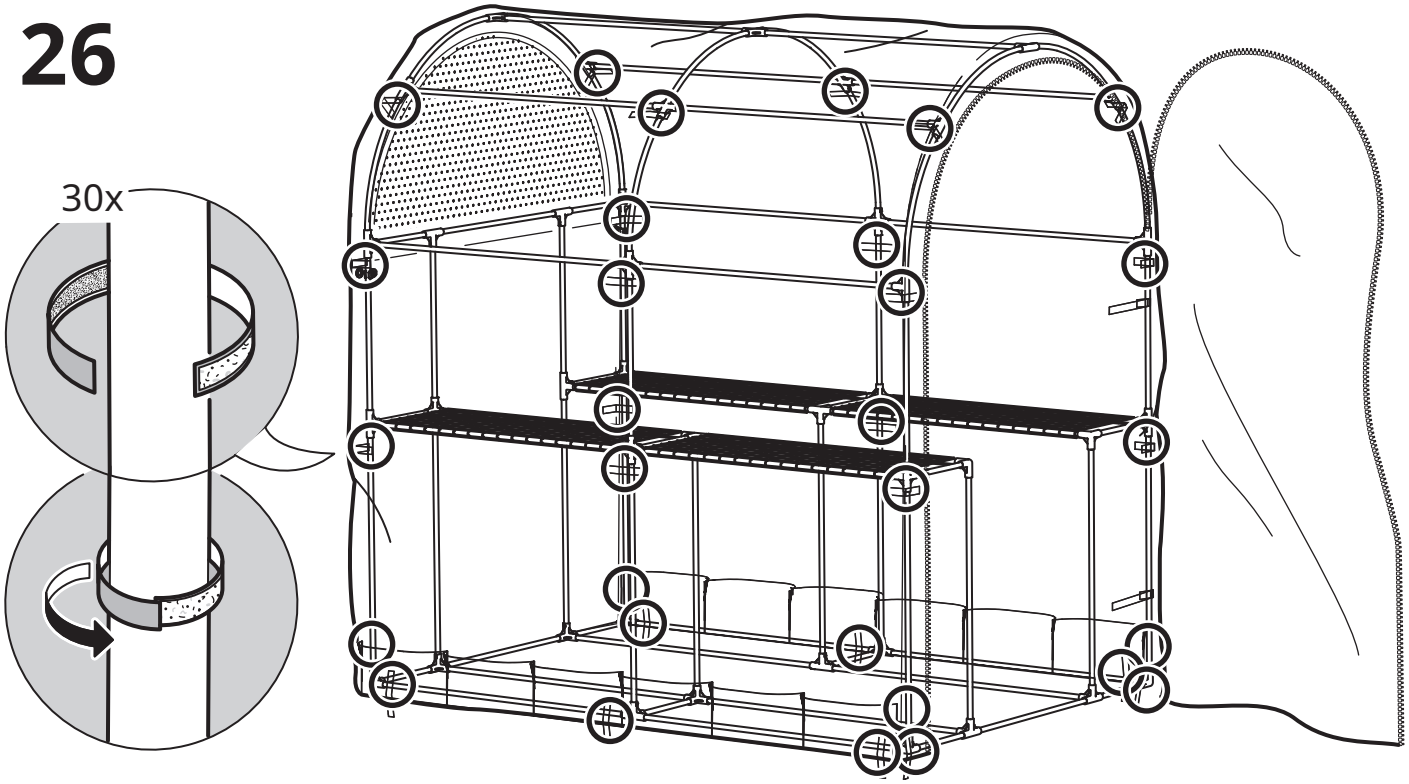

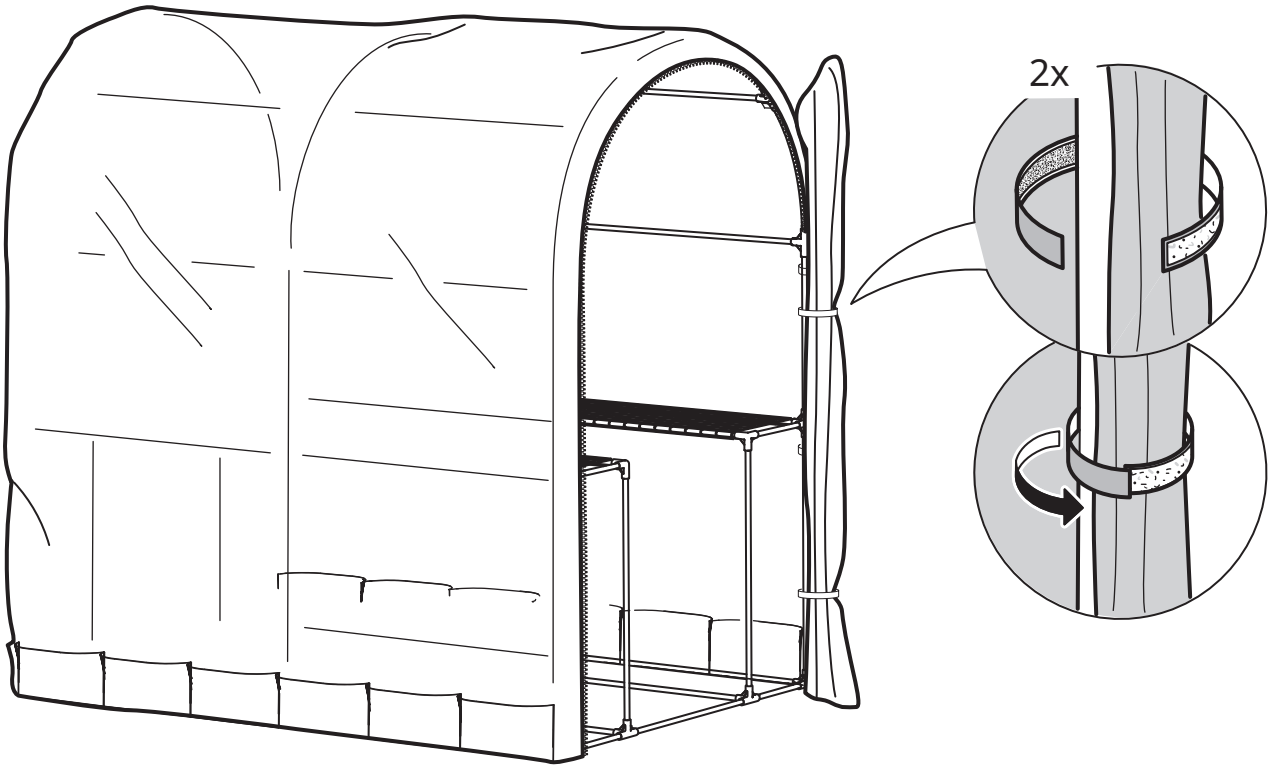

27

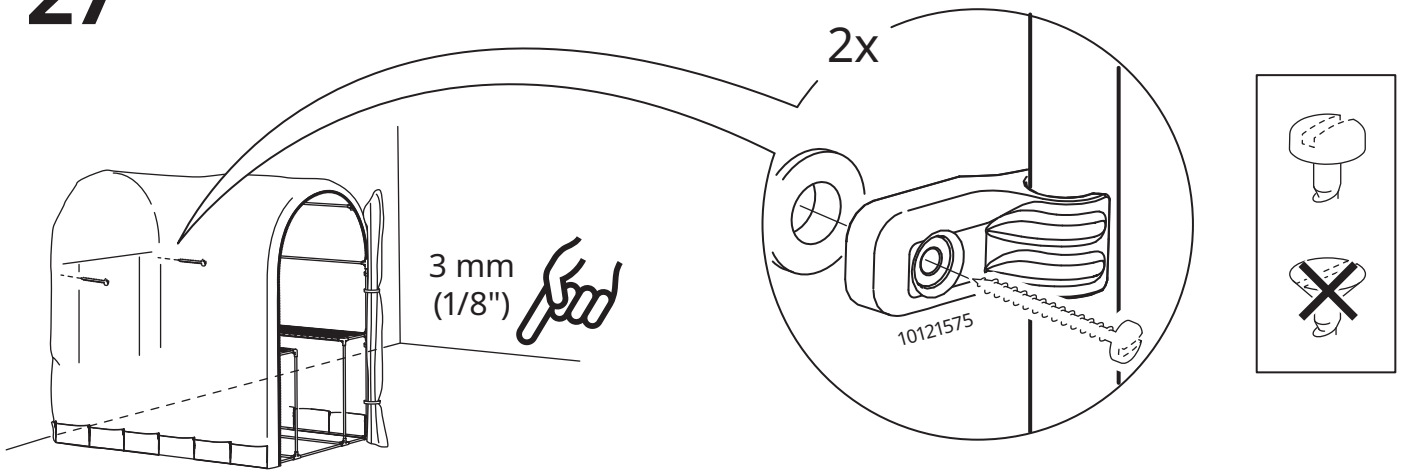
2x
3 mm
(1/8")
10121575

27

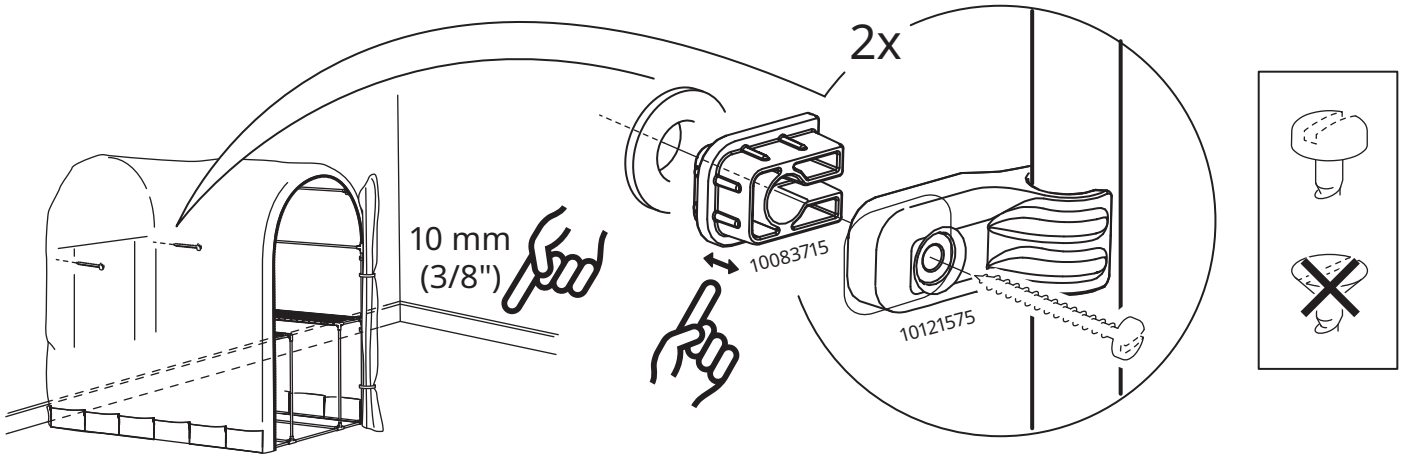
2x
10 mm
(3/8")
10083715
10121575

27

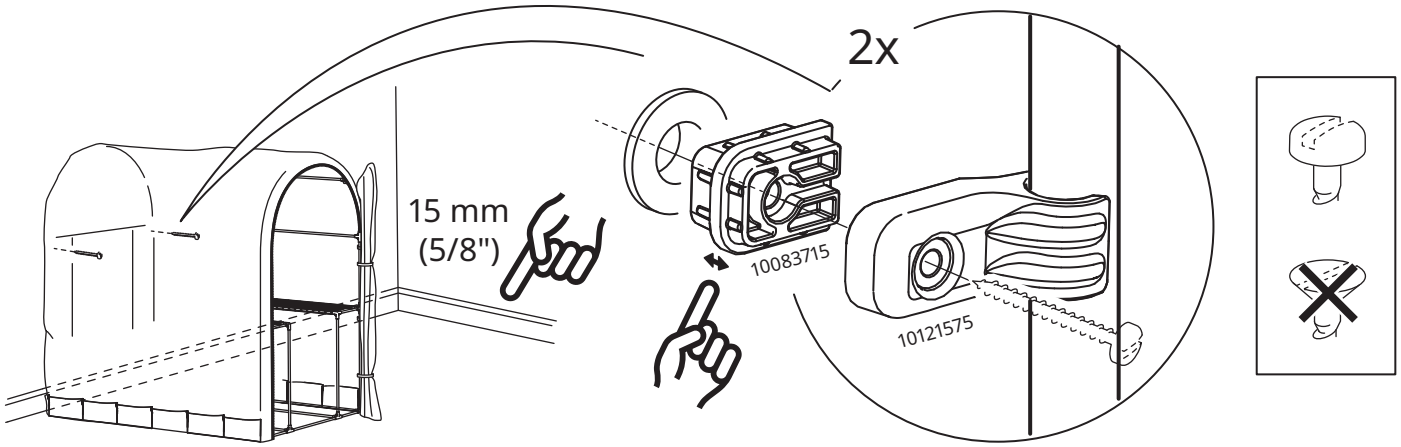
2x
15 mm
(5/8")
10083715
10121575

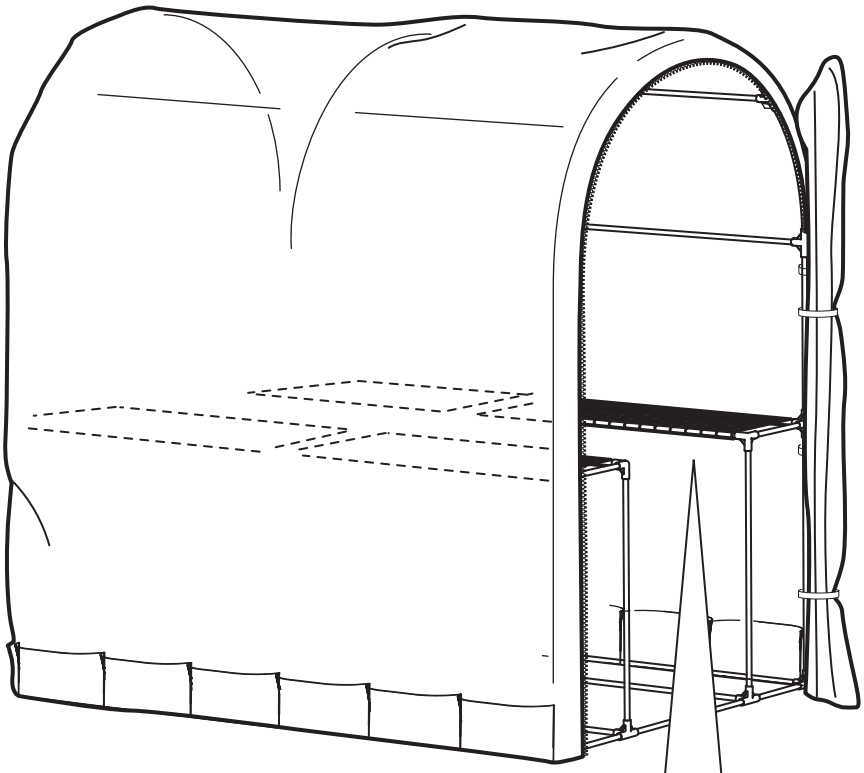

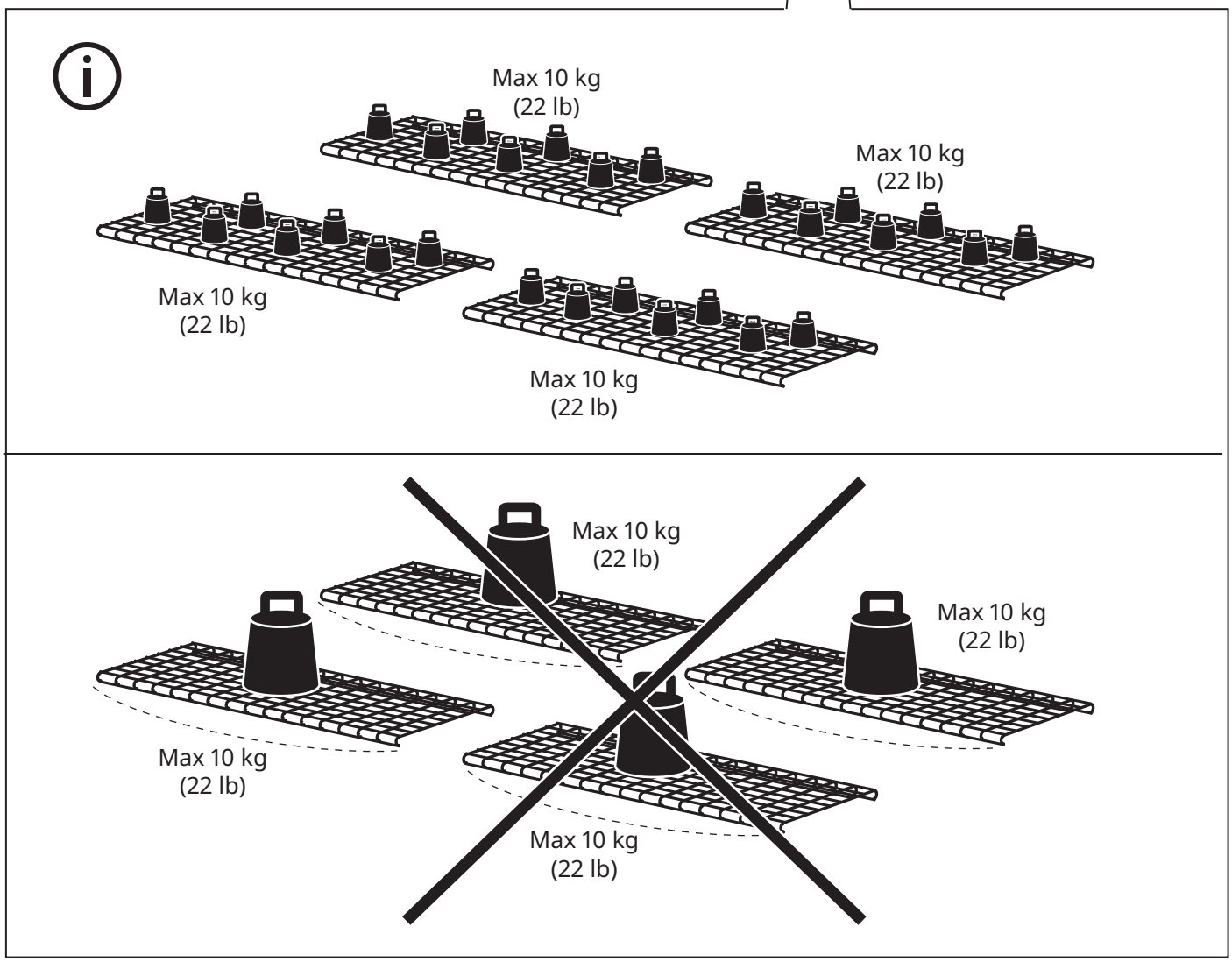
Max 10 kg
(22 lb)
Max 10 kg
(22 lb)
Max 10 kg
(22 lb)
Max 10 kg
(22 lb)
Max 10 kg
(22 lb)
Max 10 kg
(22 lb)
Max 10 kg
(22 lb)
Max 10 kg
(22 lb)

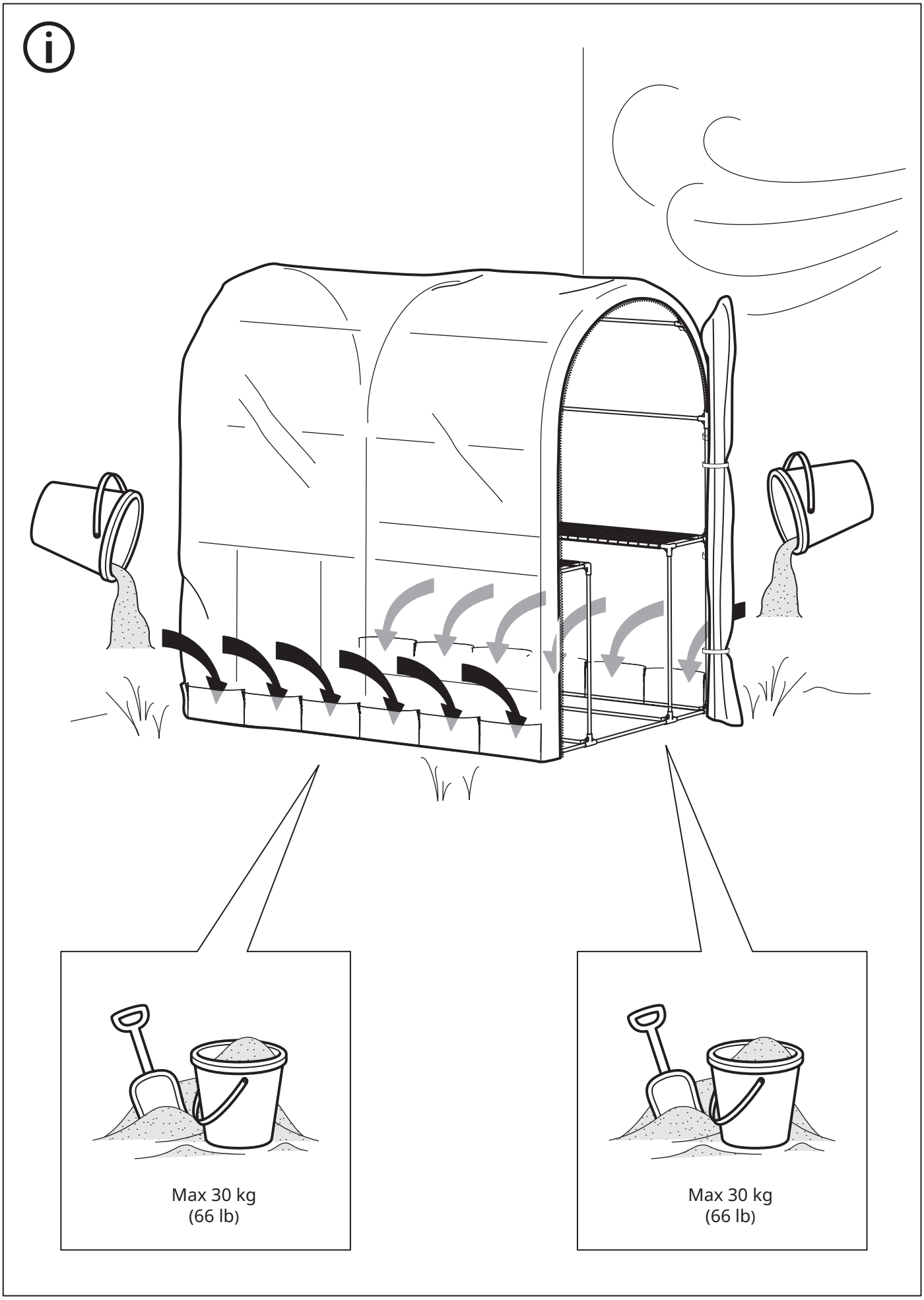
Max 30 kg
(66 lb)
Max 30 kg
(66 lb)

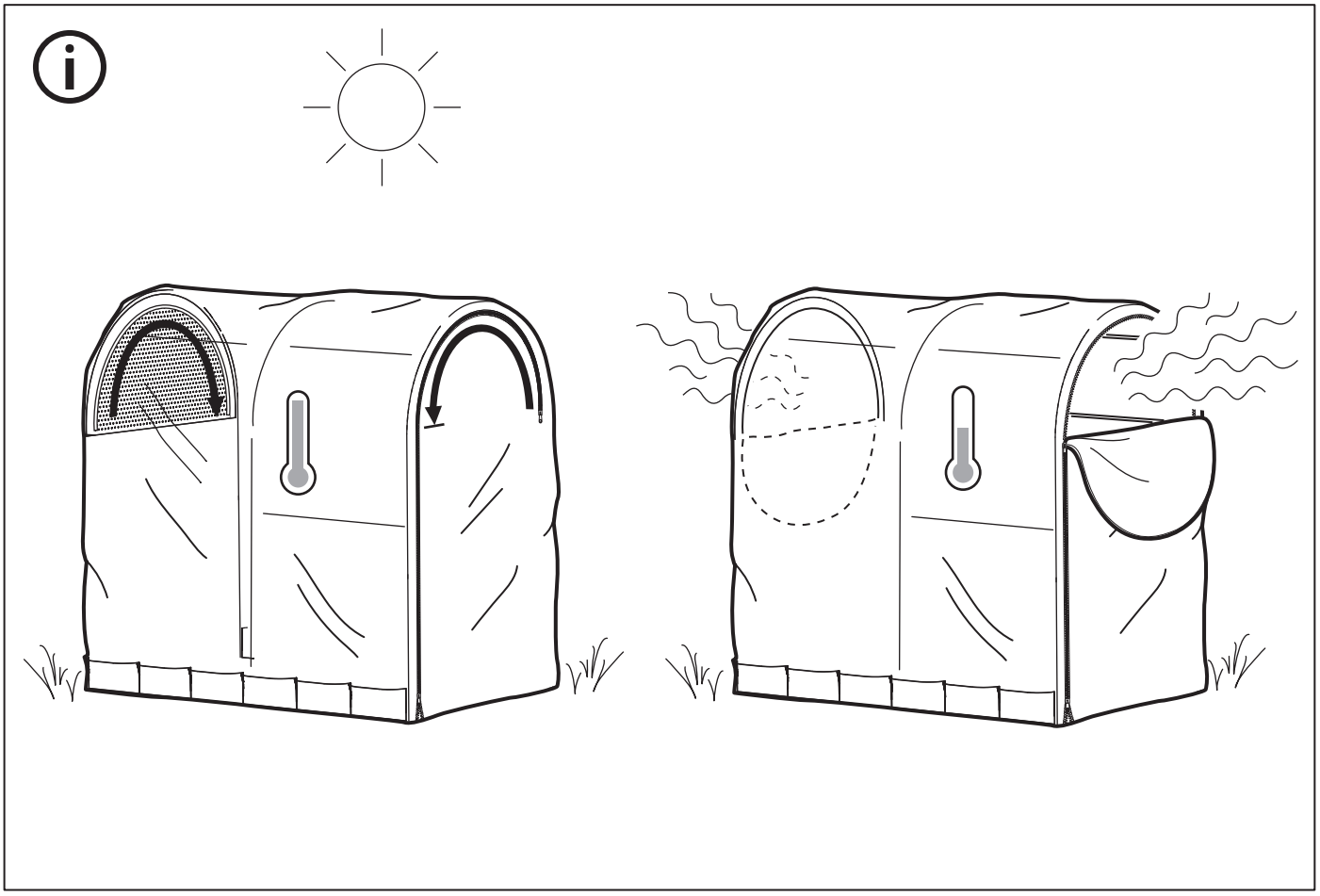

© Inter IKEA Systems B.V. 2024 2026-03-09 AA-2480703-4