SJÖELEFANT

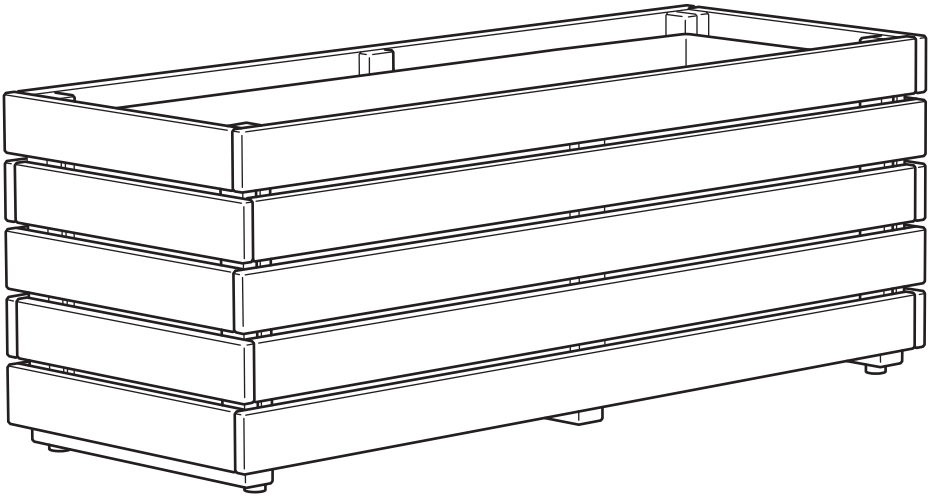

Design and Quality
IKEA of Sweden

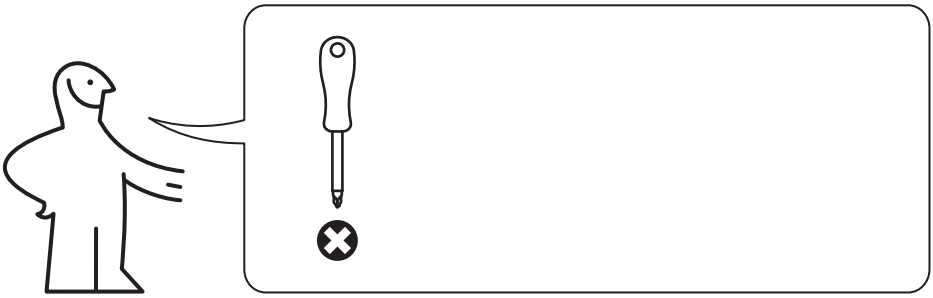

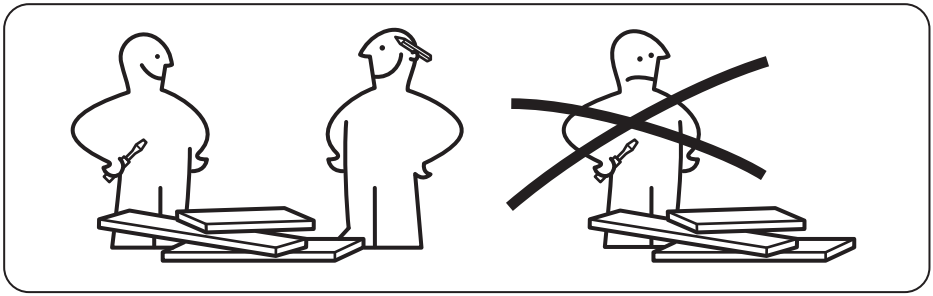

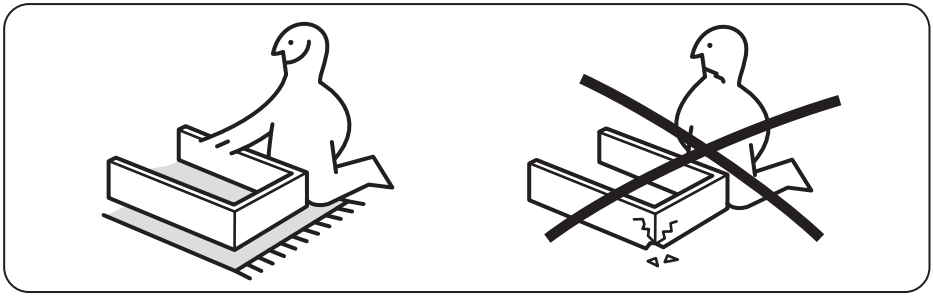

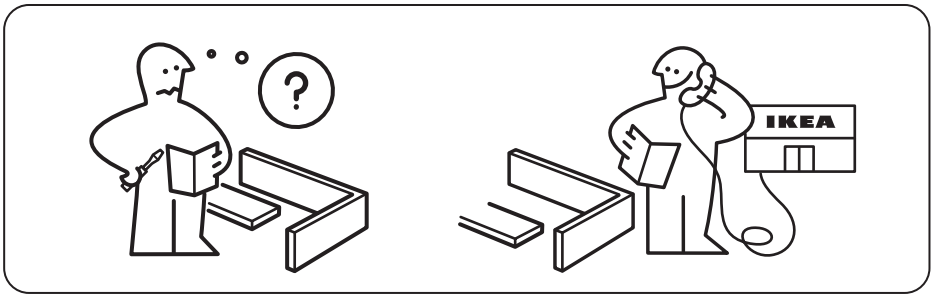
?
IKEA

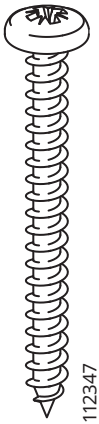

112347

4x

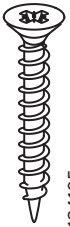

124195

8x

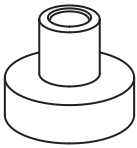

193678

4x

1

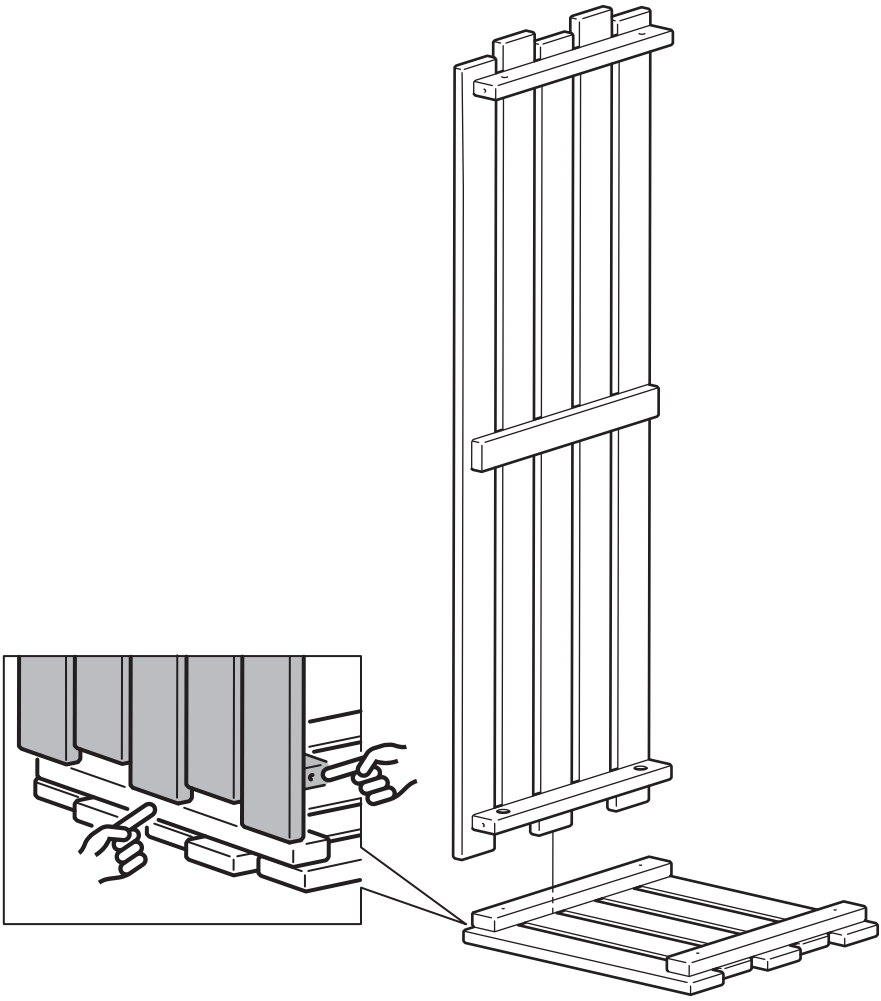

2

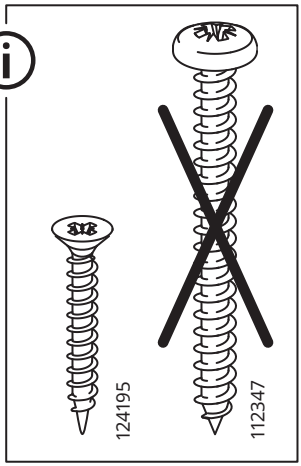

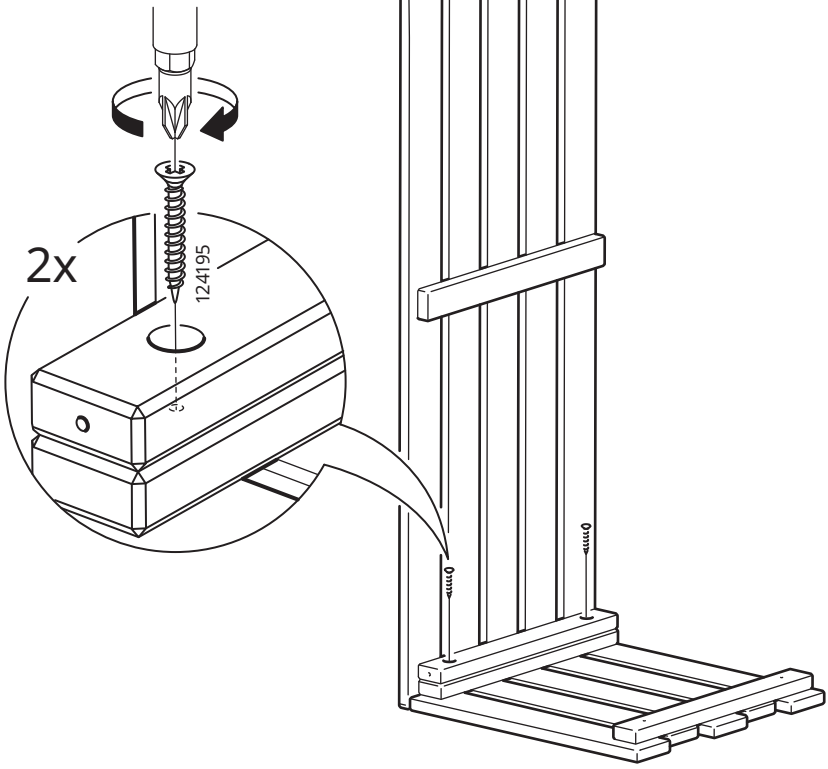

3

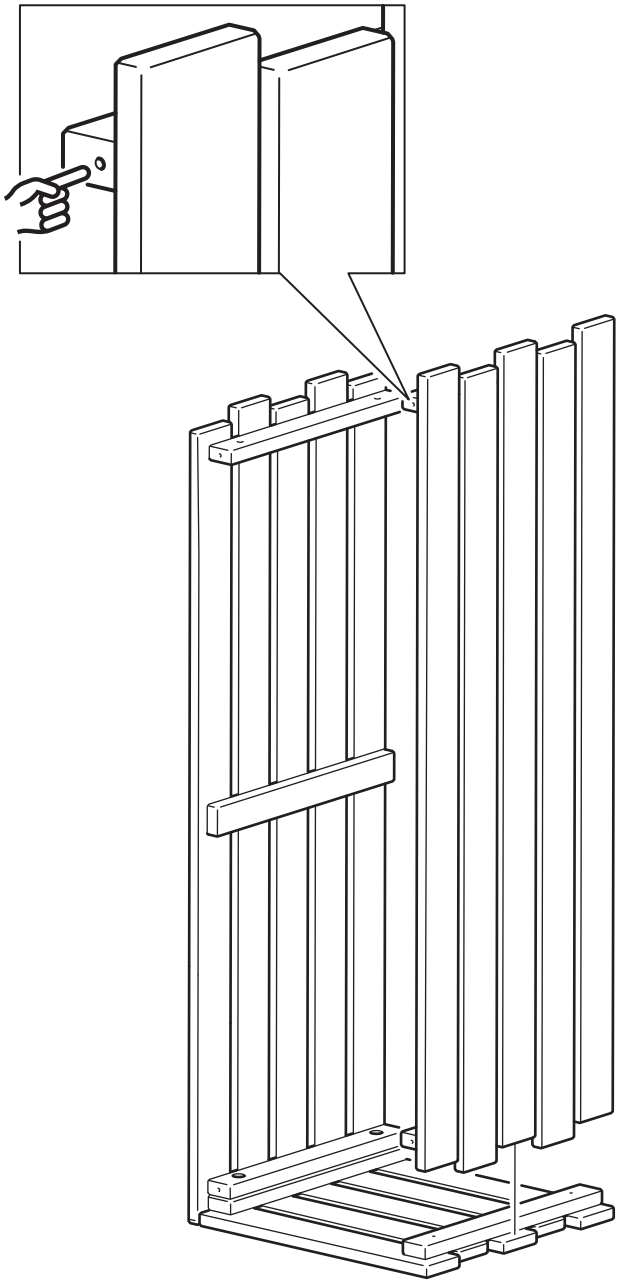

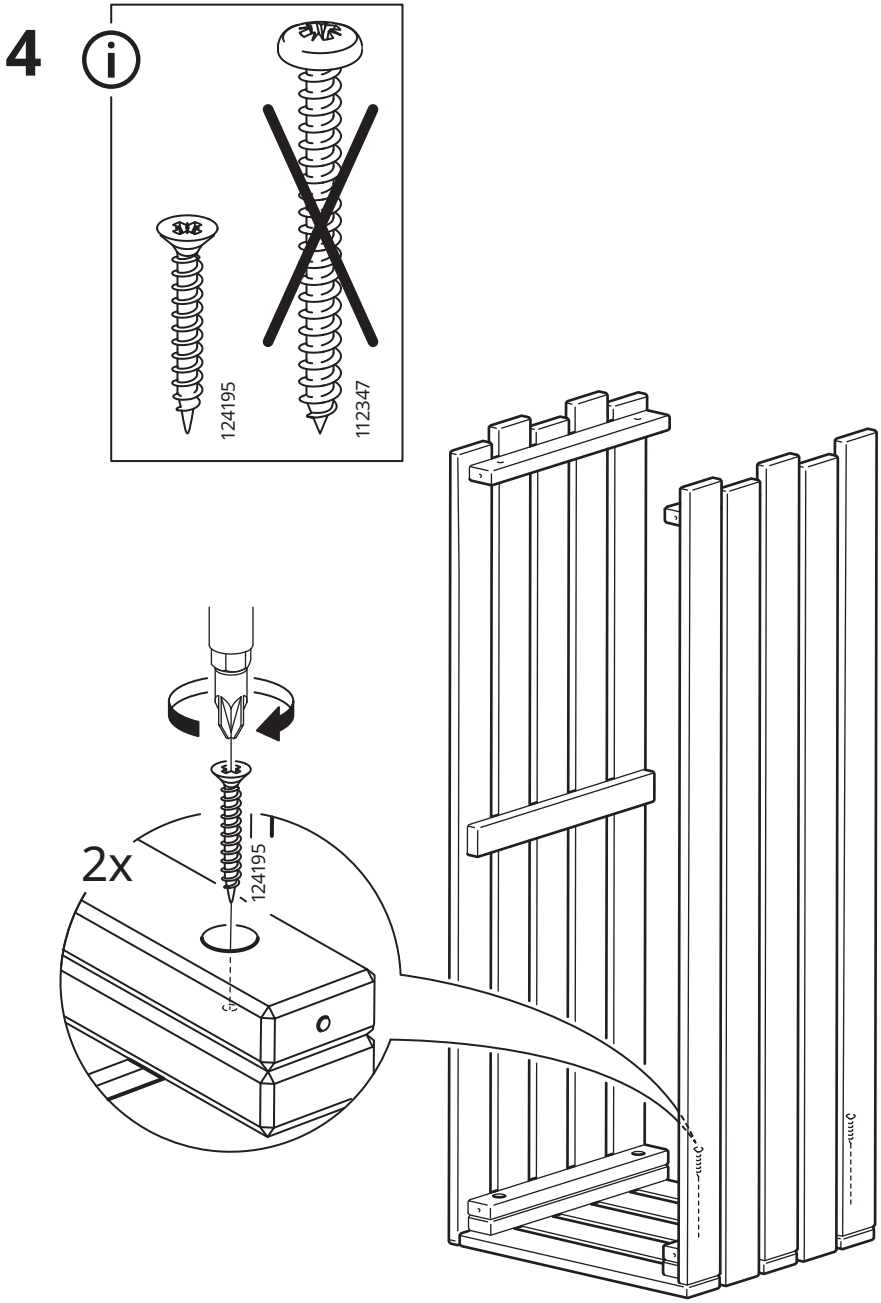
4
124195
112347
2x
124195

5

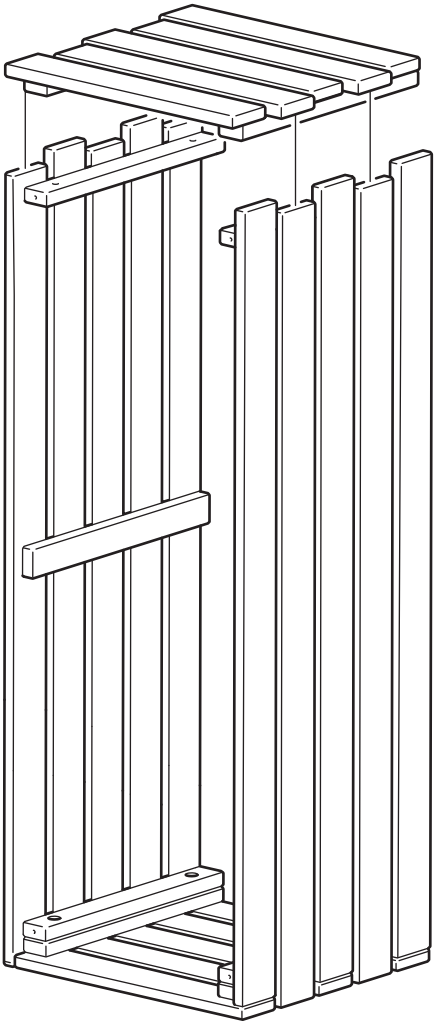

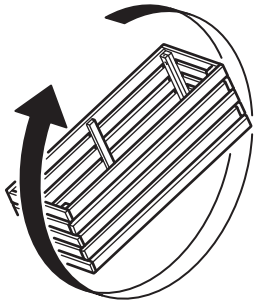

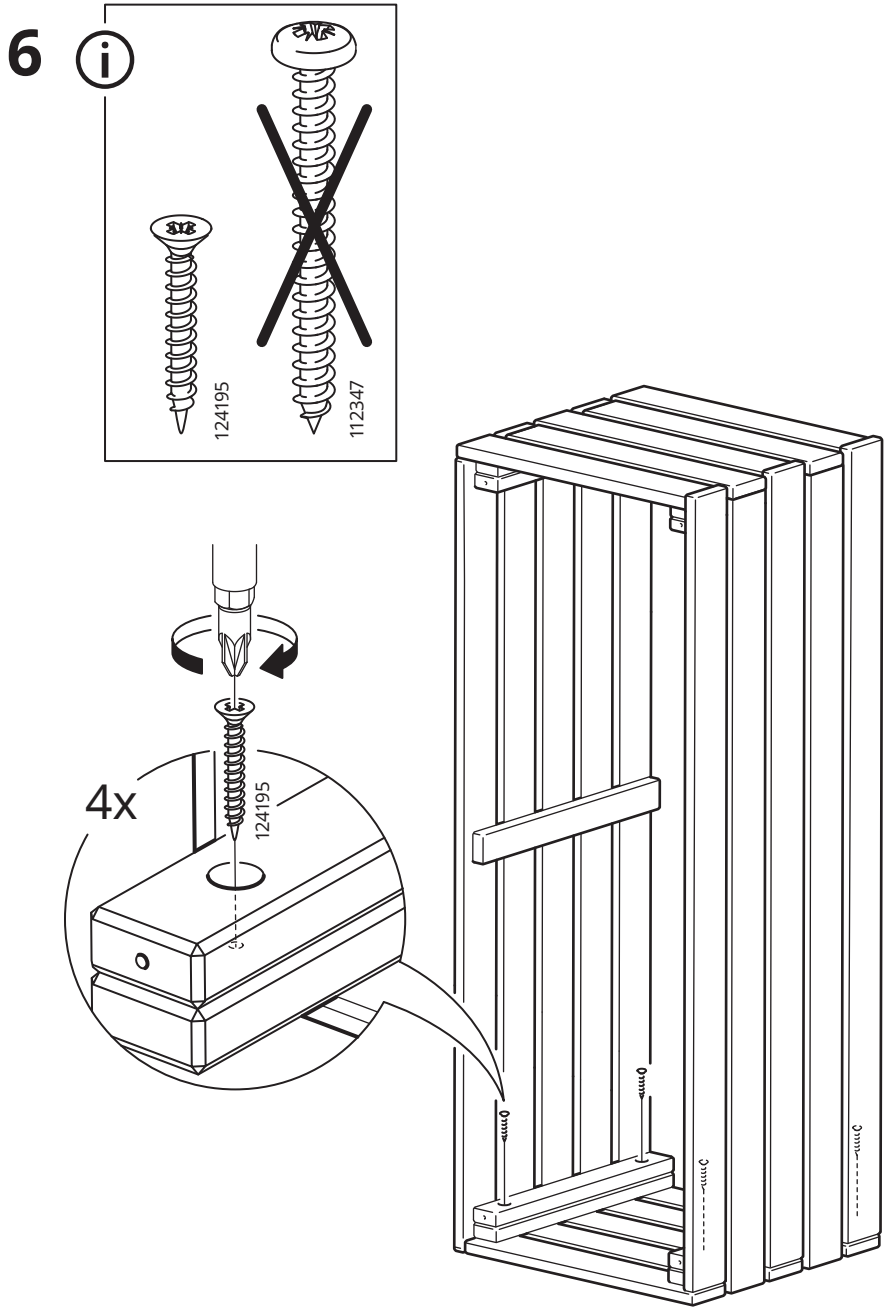
6
124195
112347
4x
124195

7

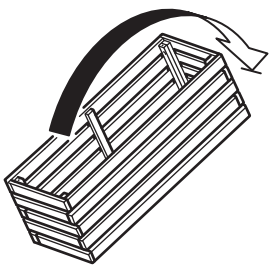

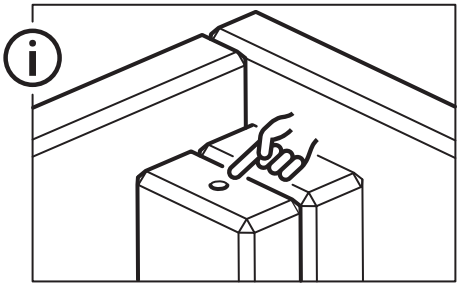

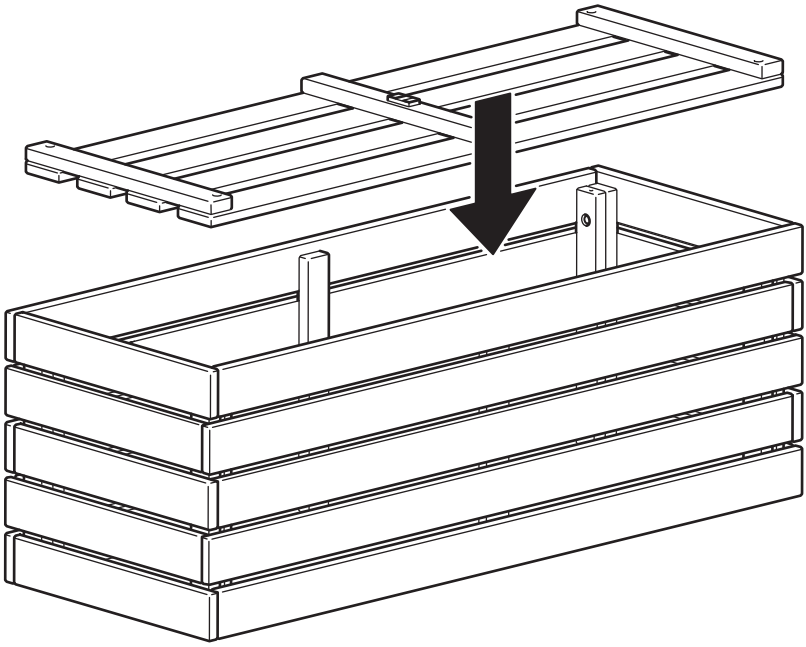

8

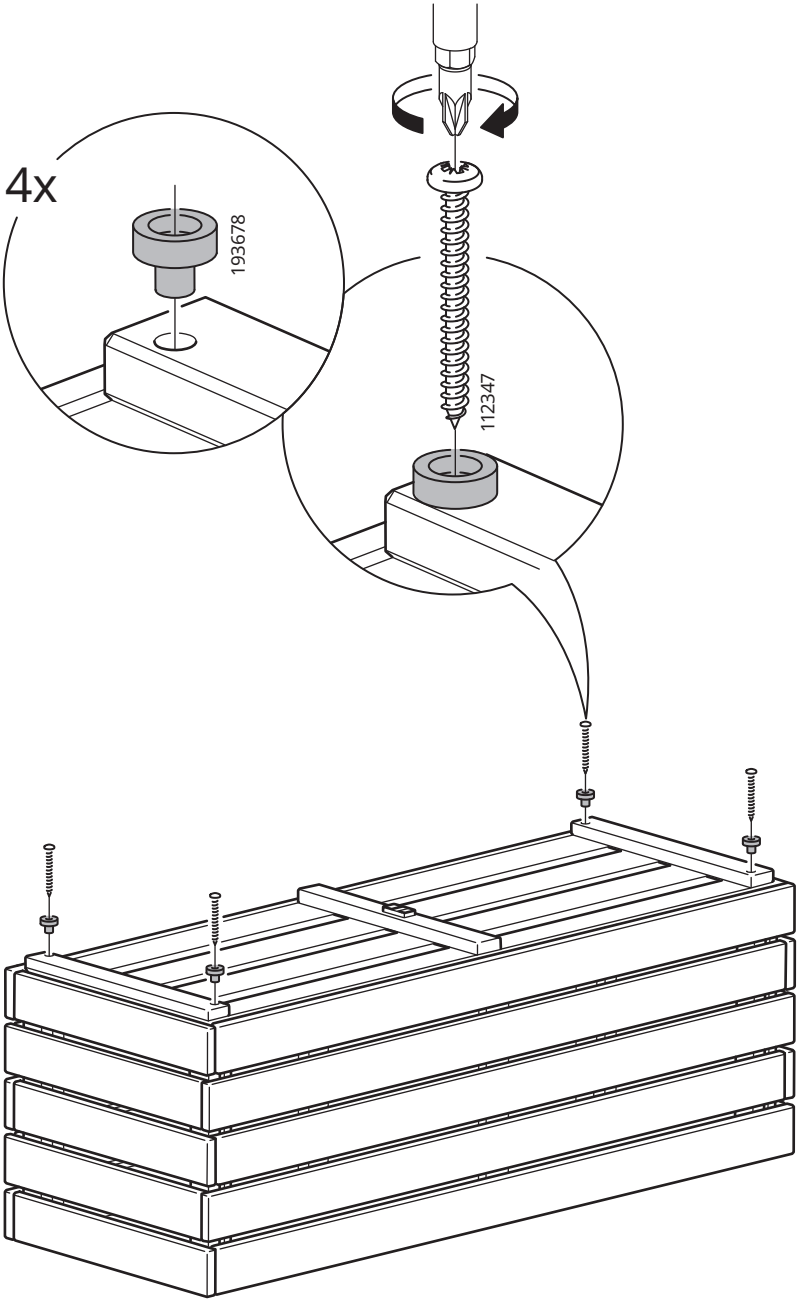

9

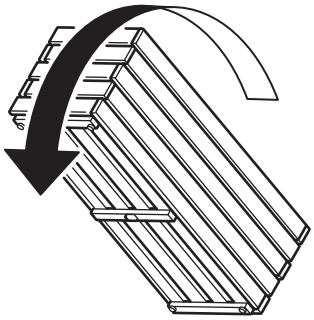

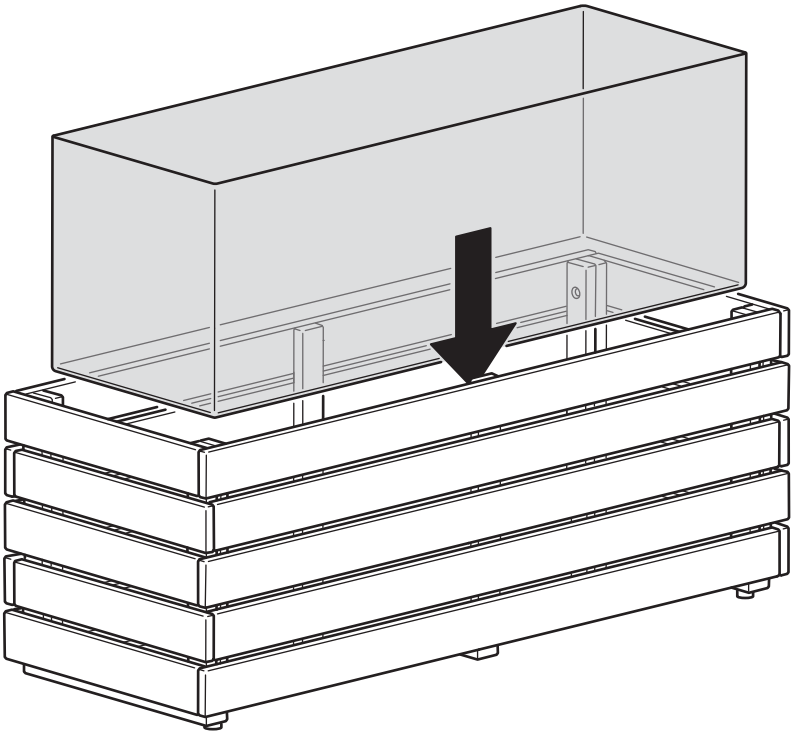

© Inter IKEA Systems B.V. 2025