# REVSKÄR

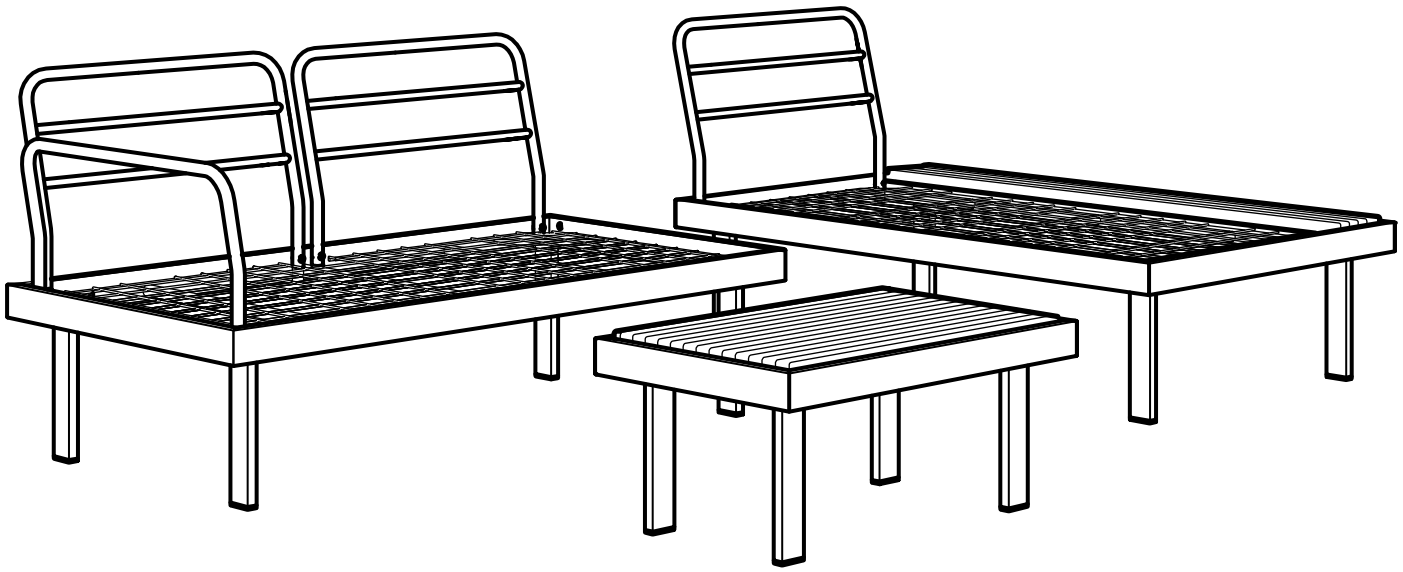

Design and Quality
IKEA of Sweden

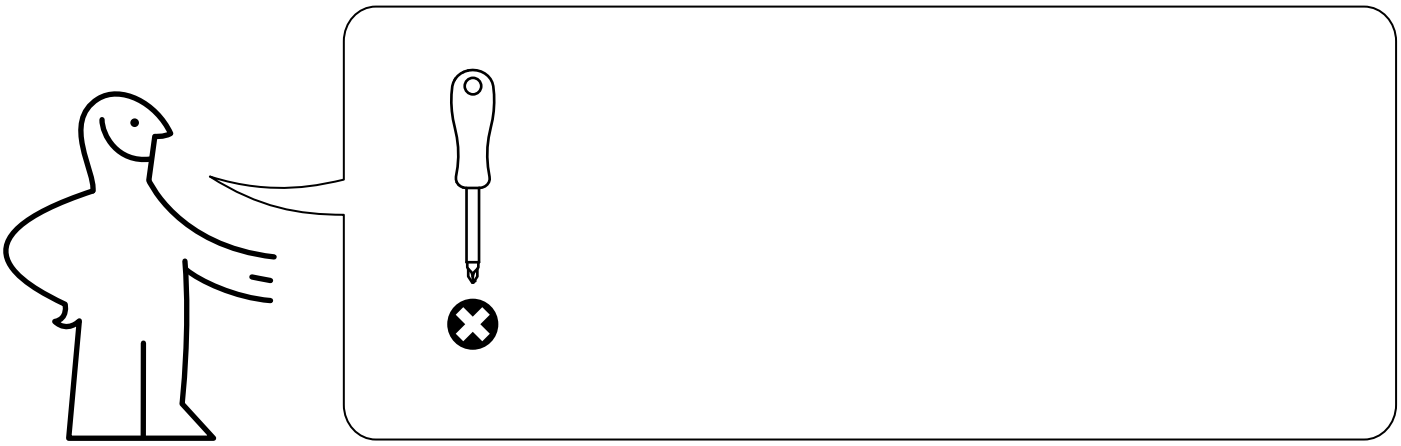

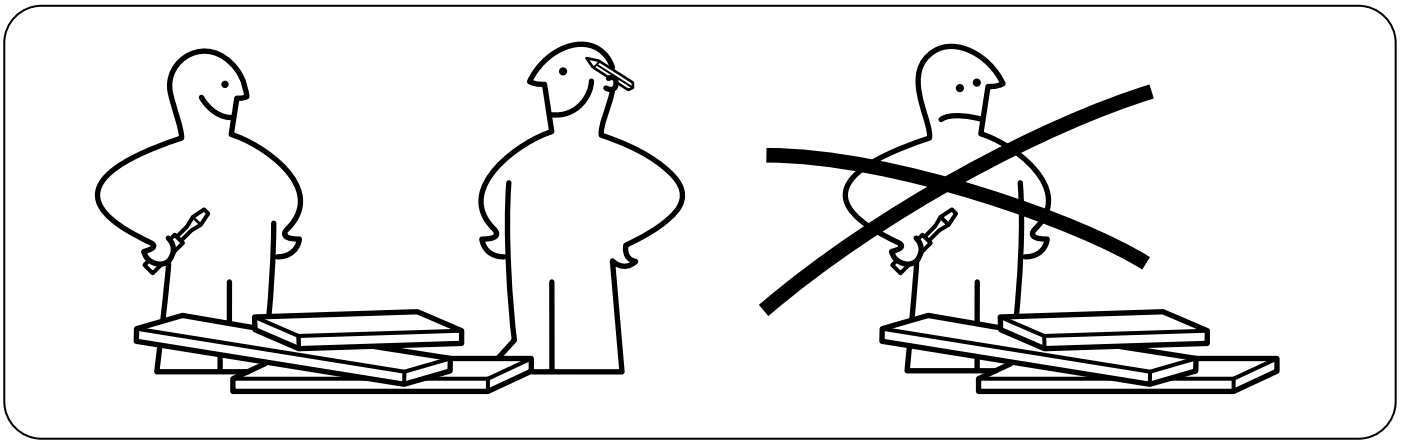

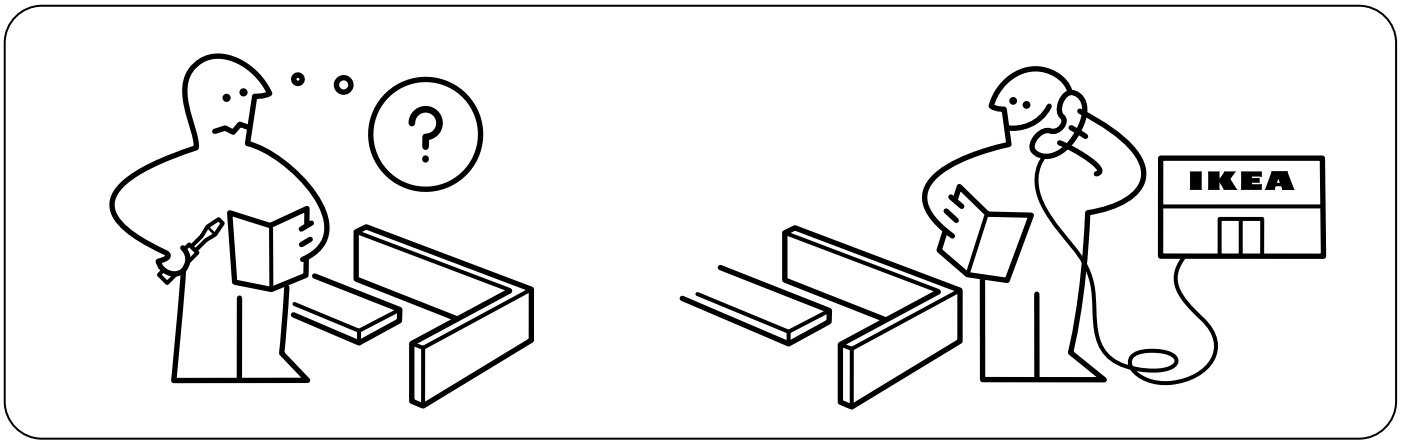
IKEA

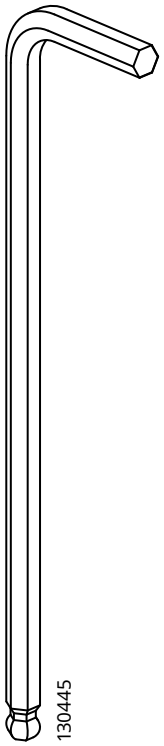


2x

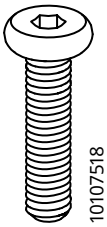


8x




10x




24x

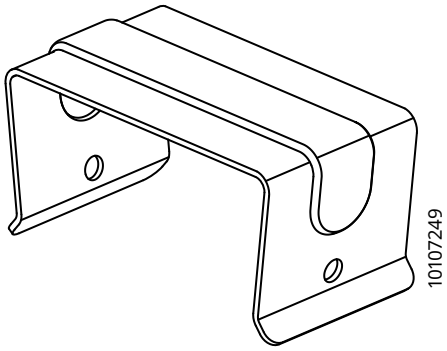


4x

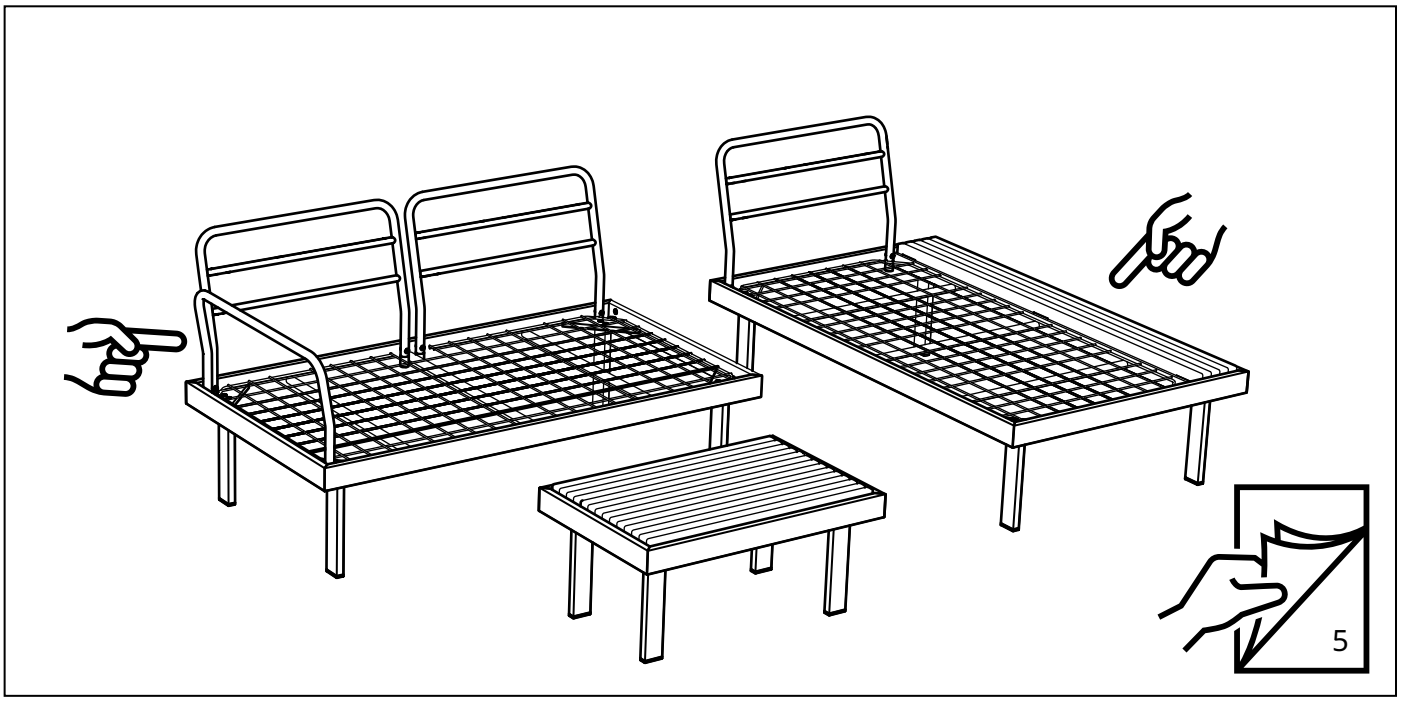
5

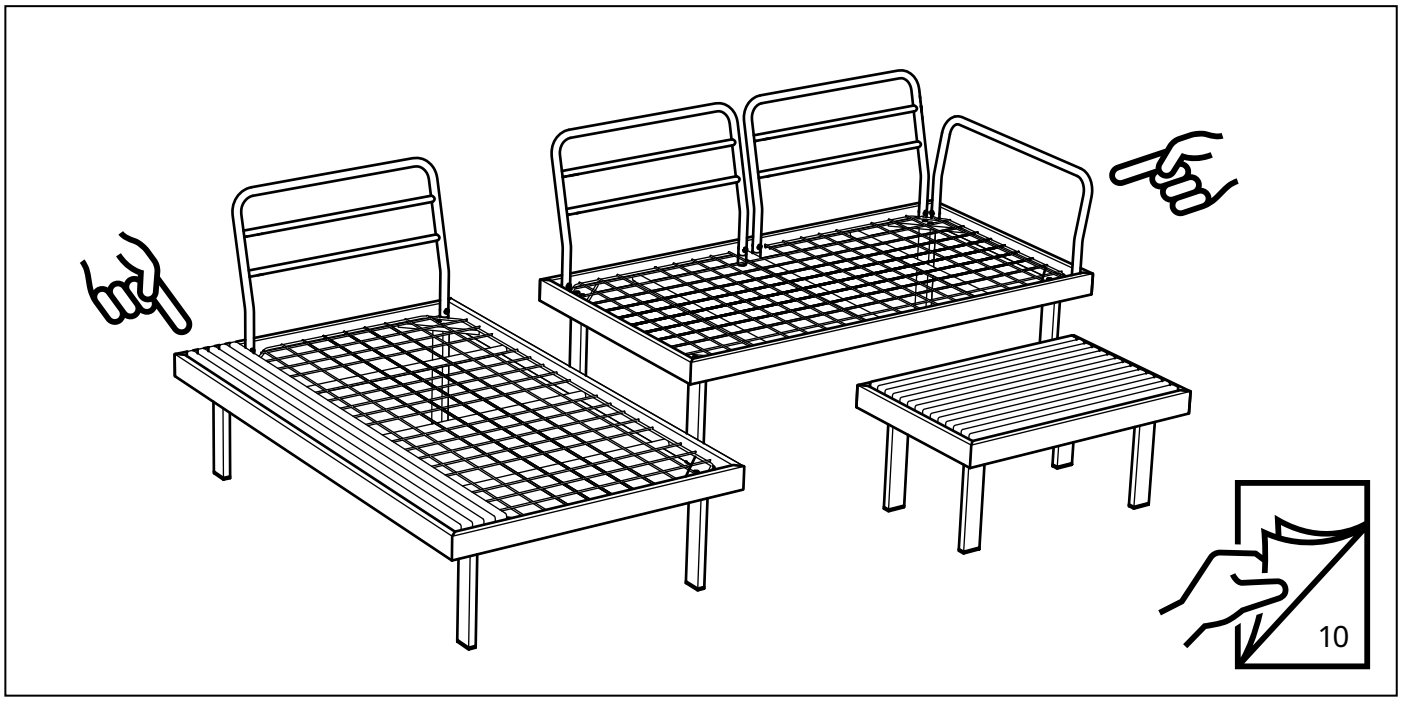
10

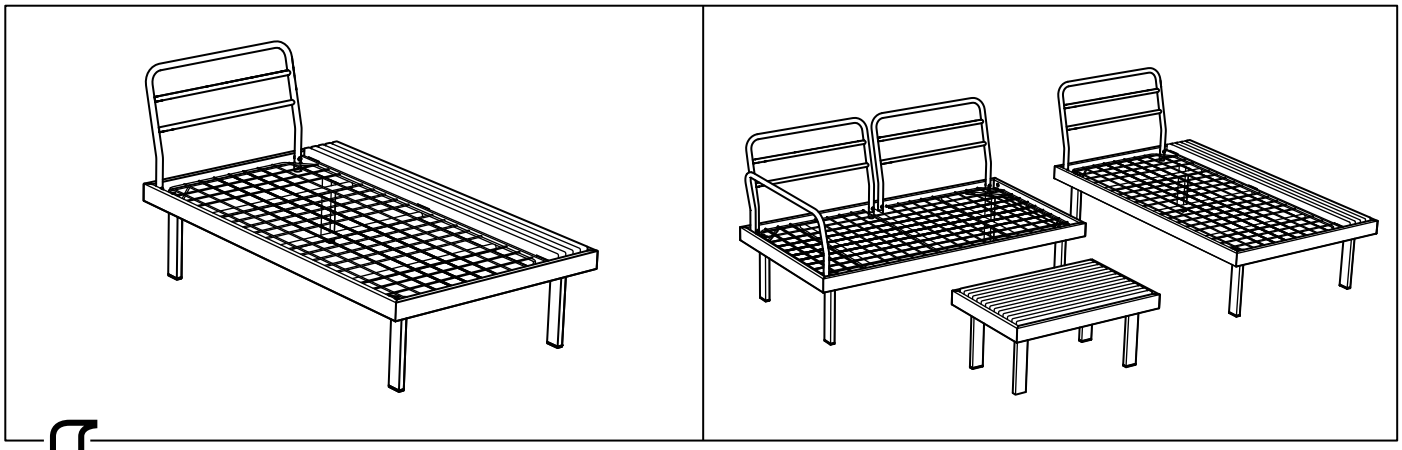

1

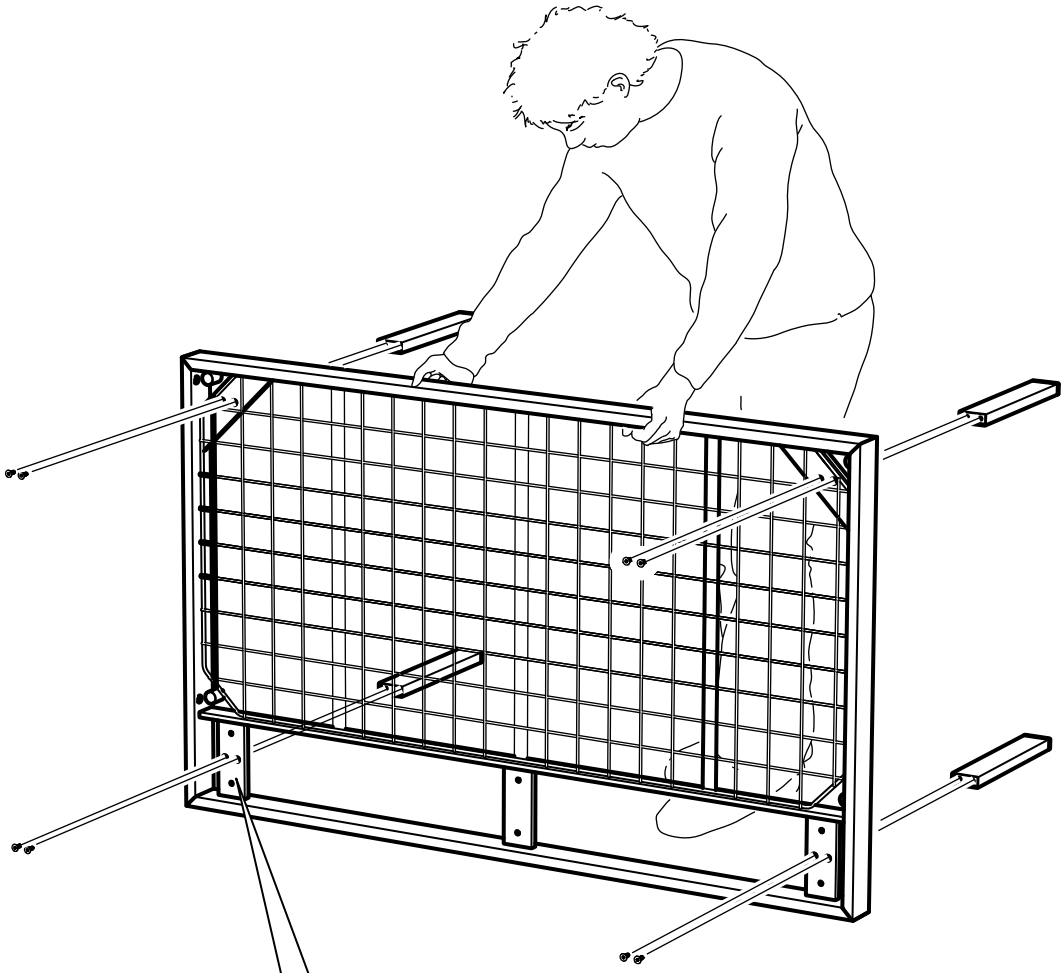

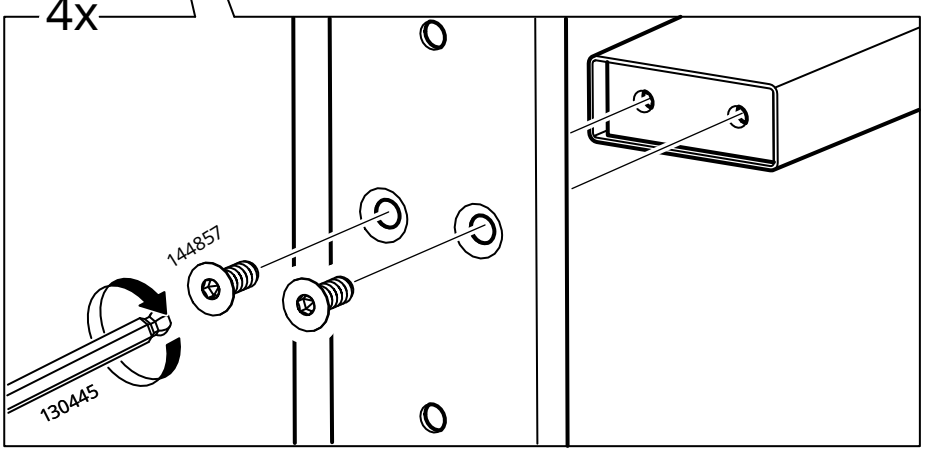

## 2

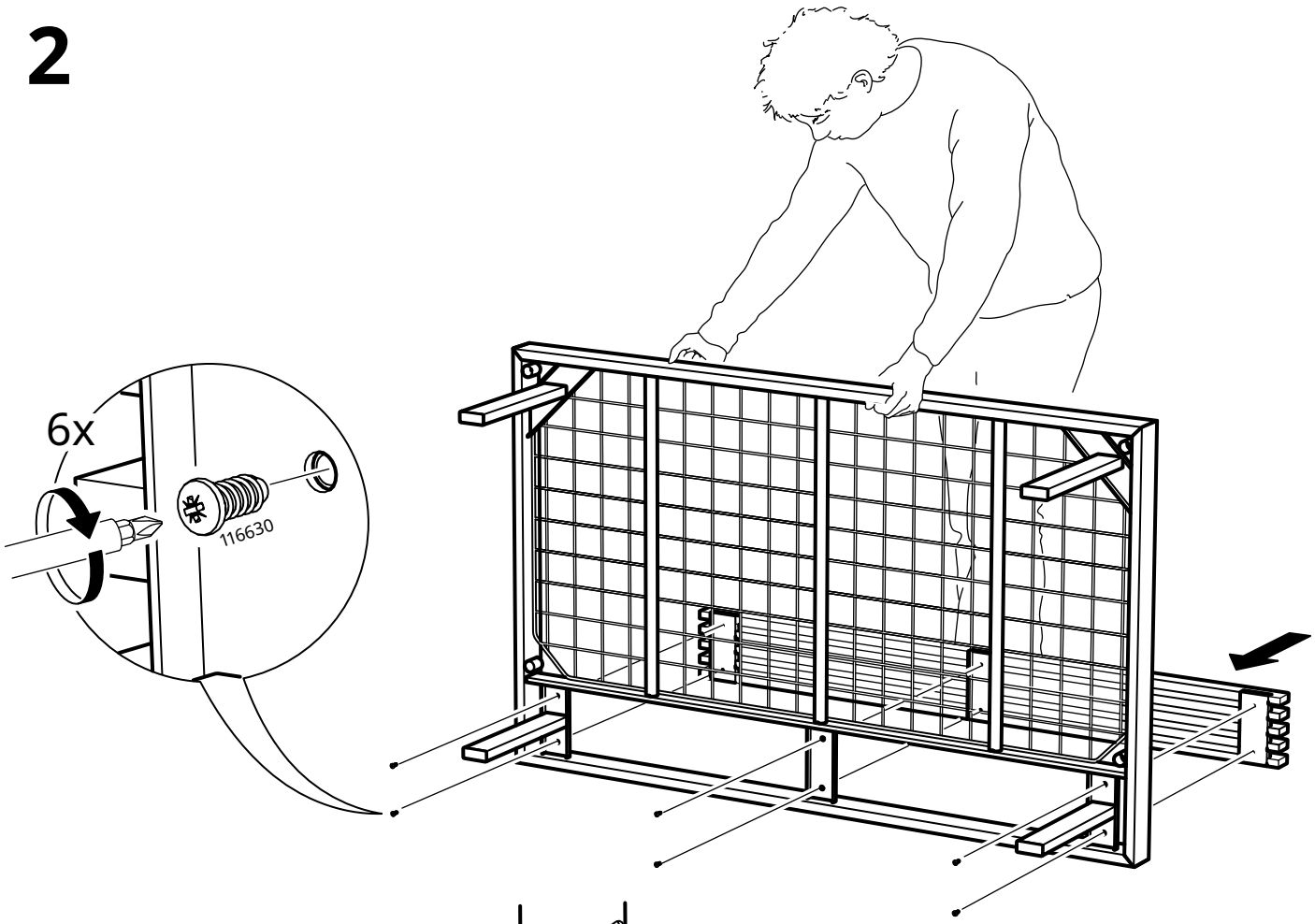


## 3

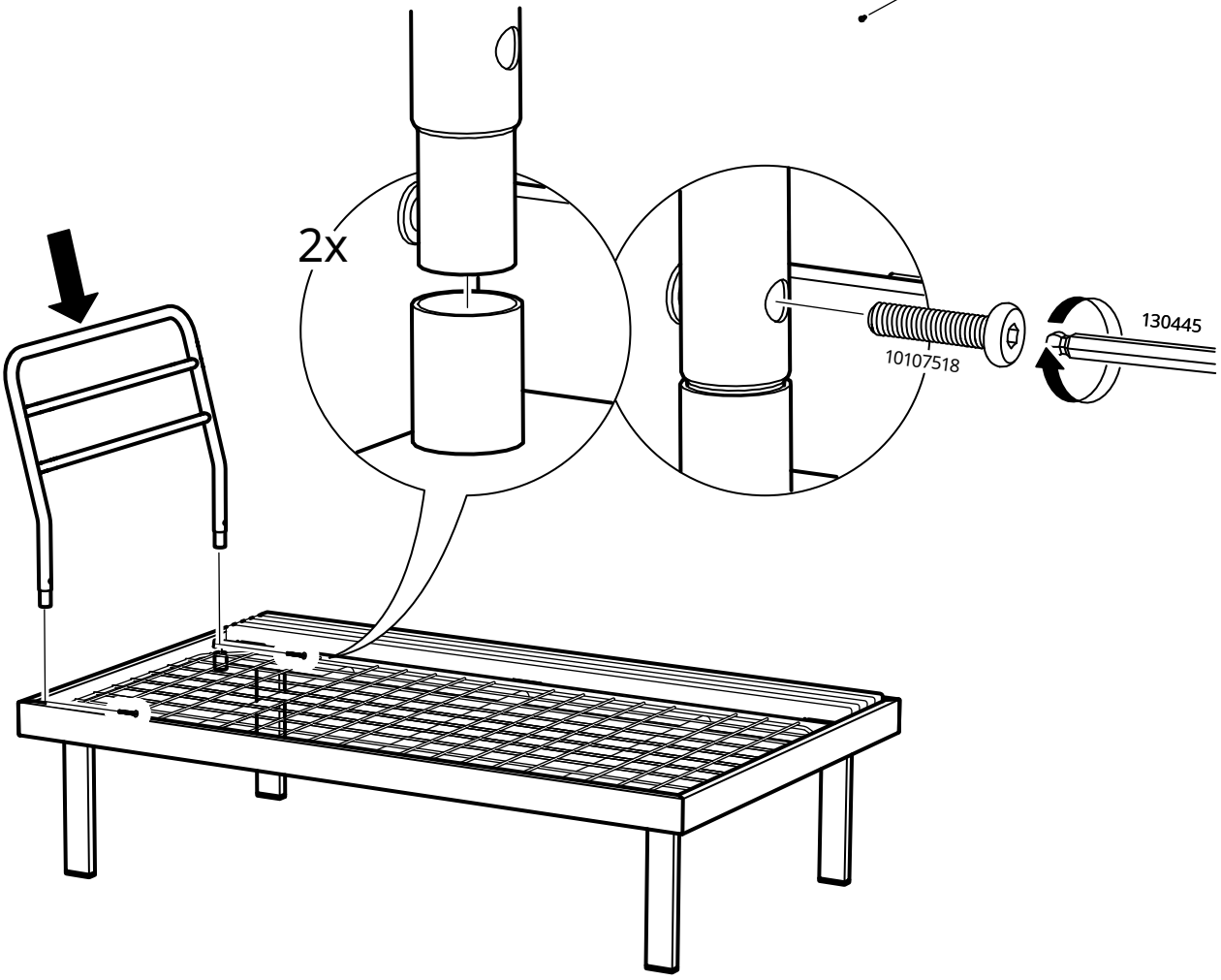

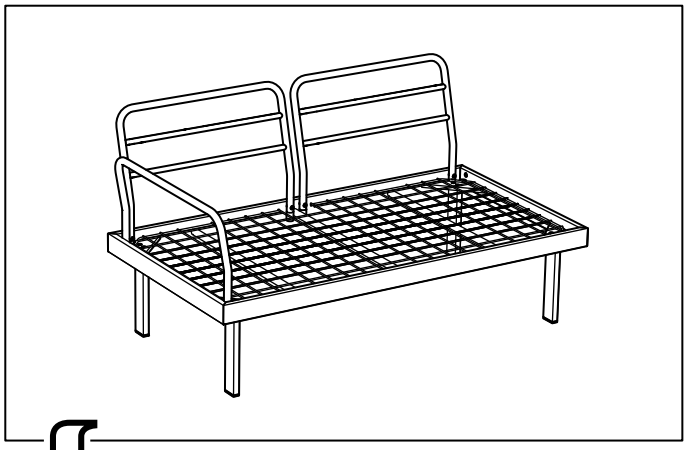

# 4

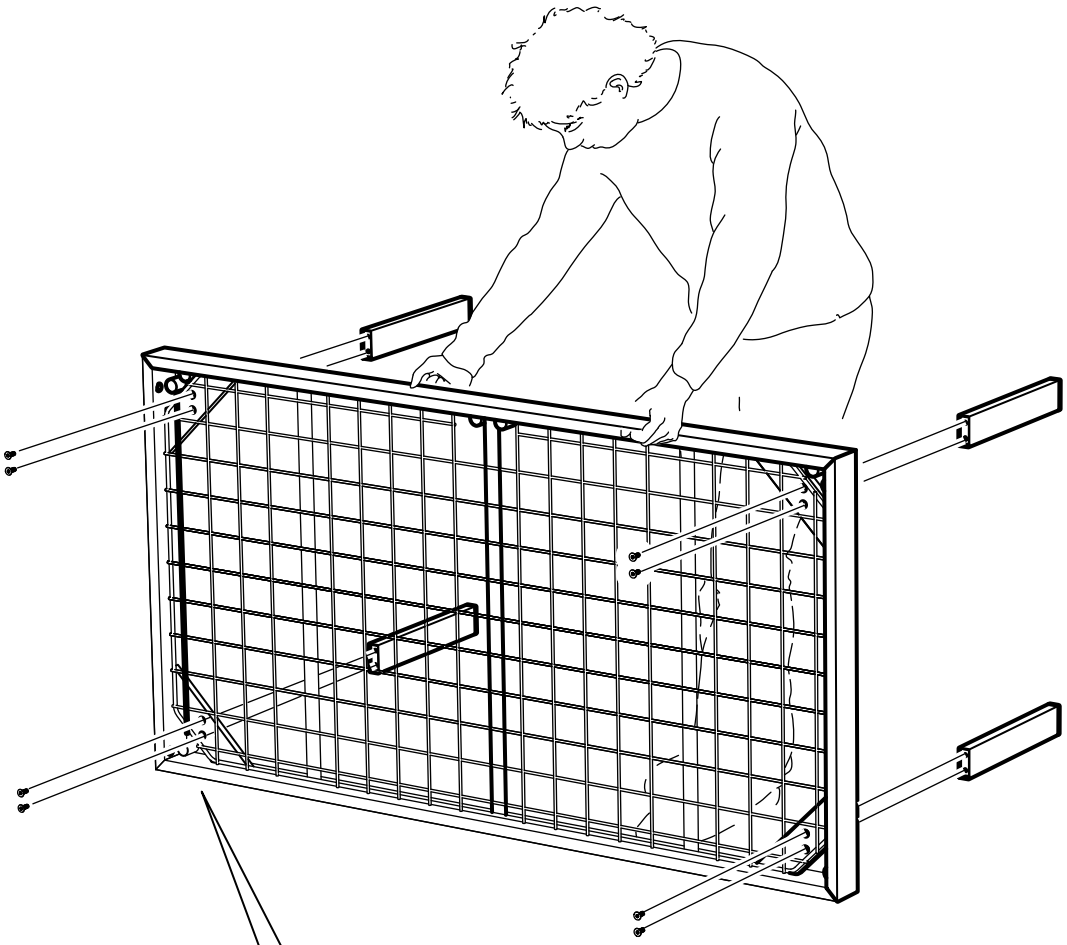

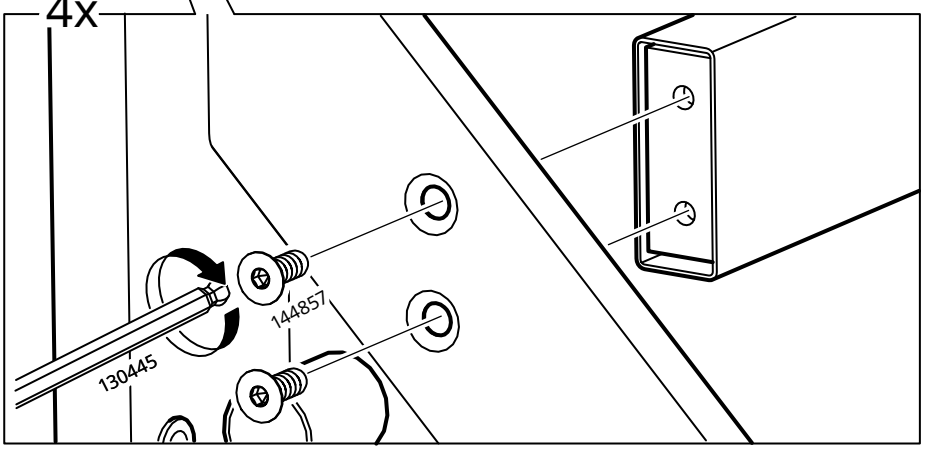

# 5

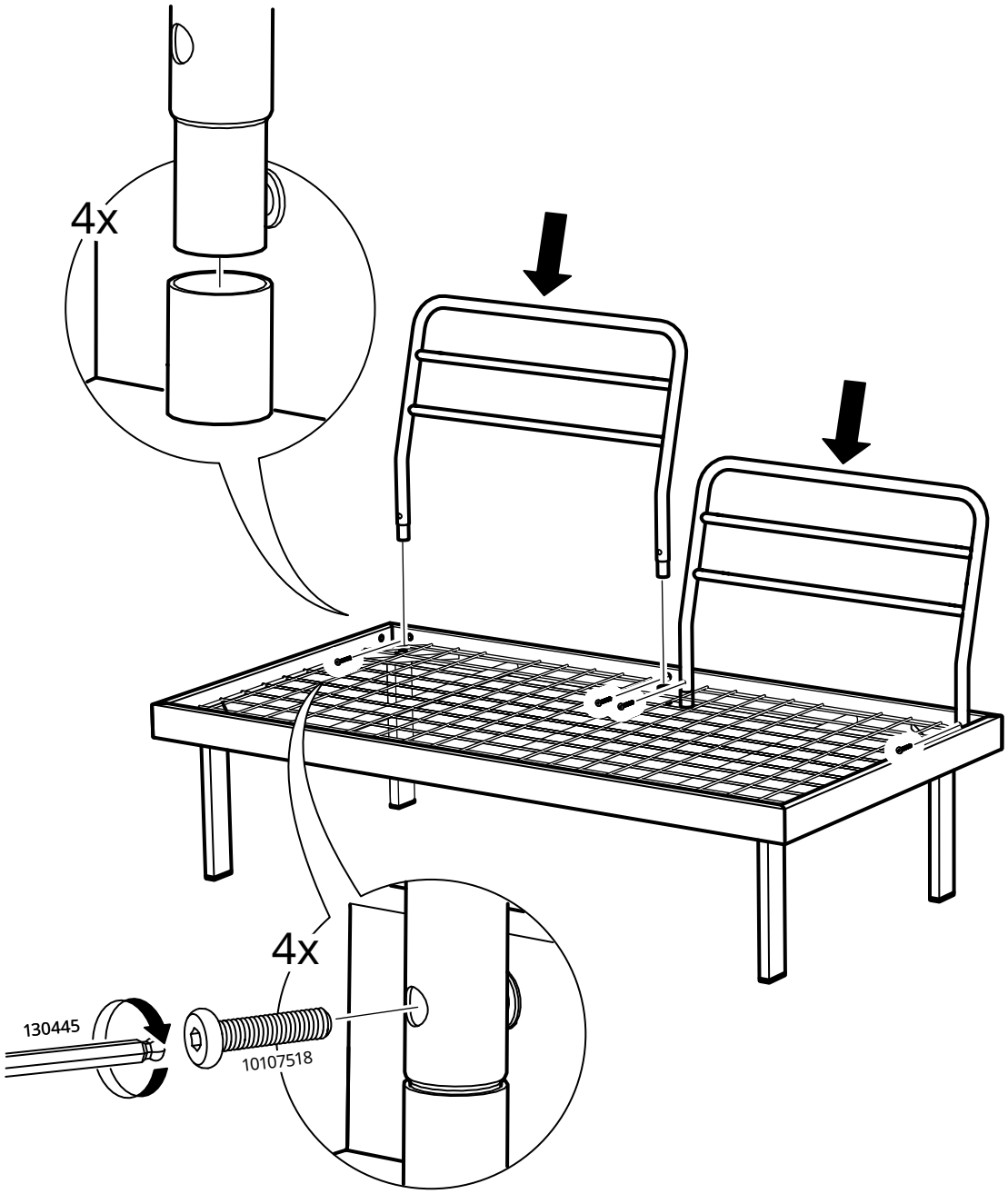

# 6

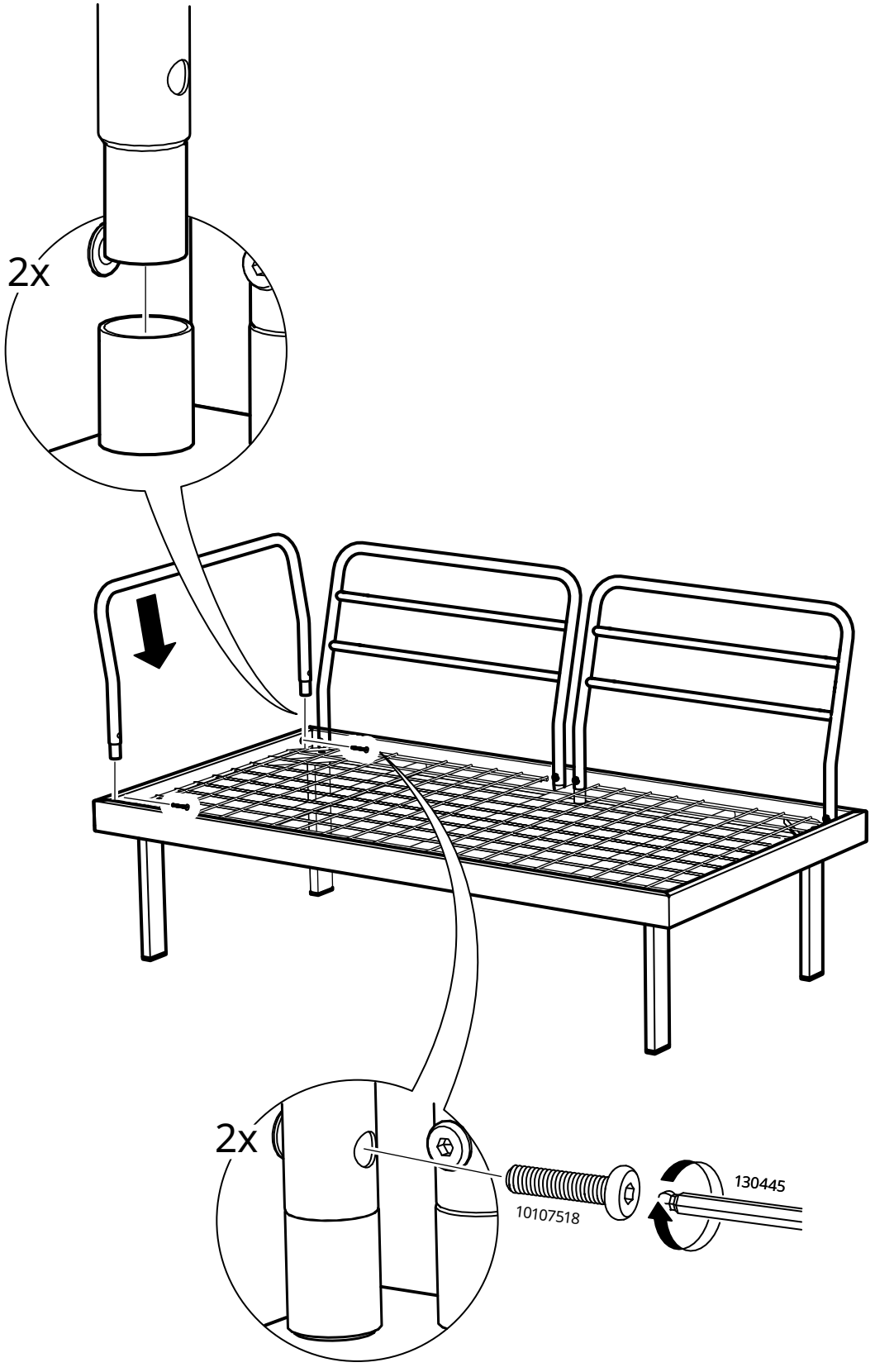


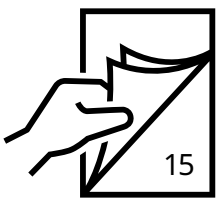

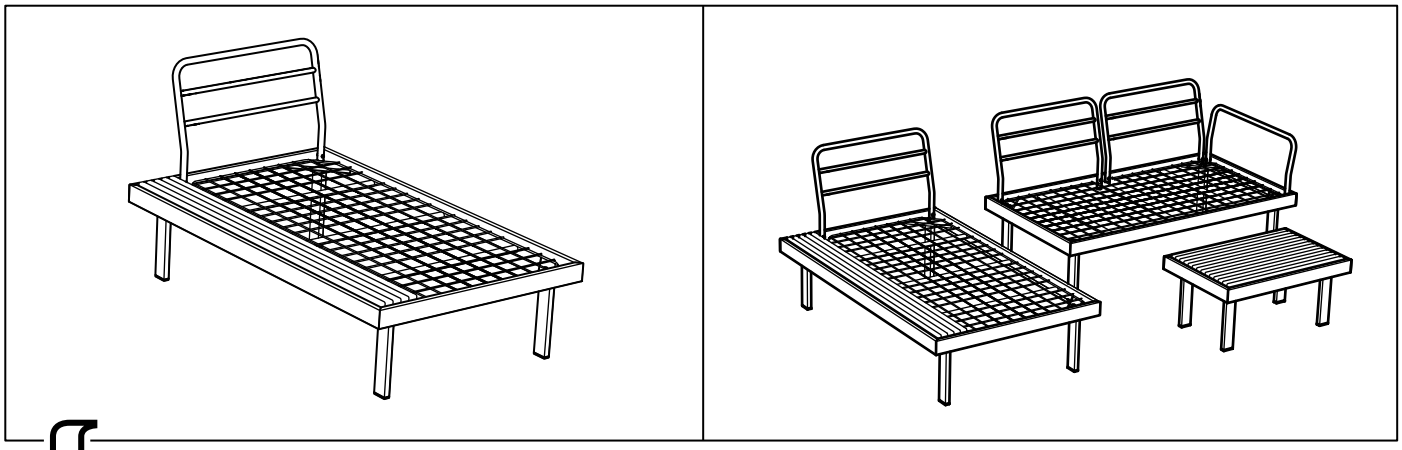

1

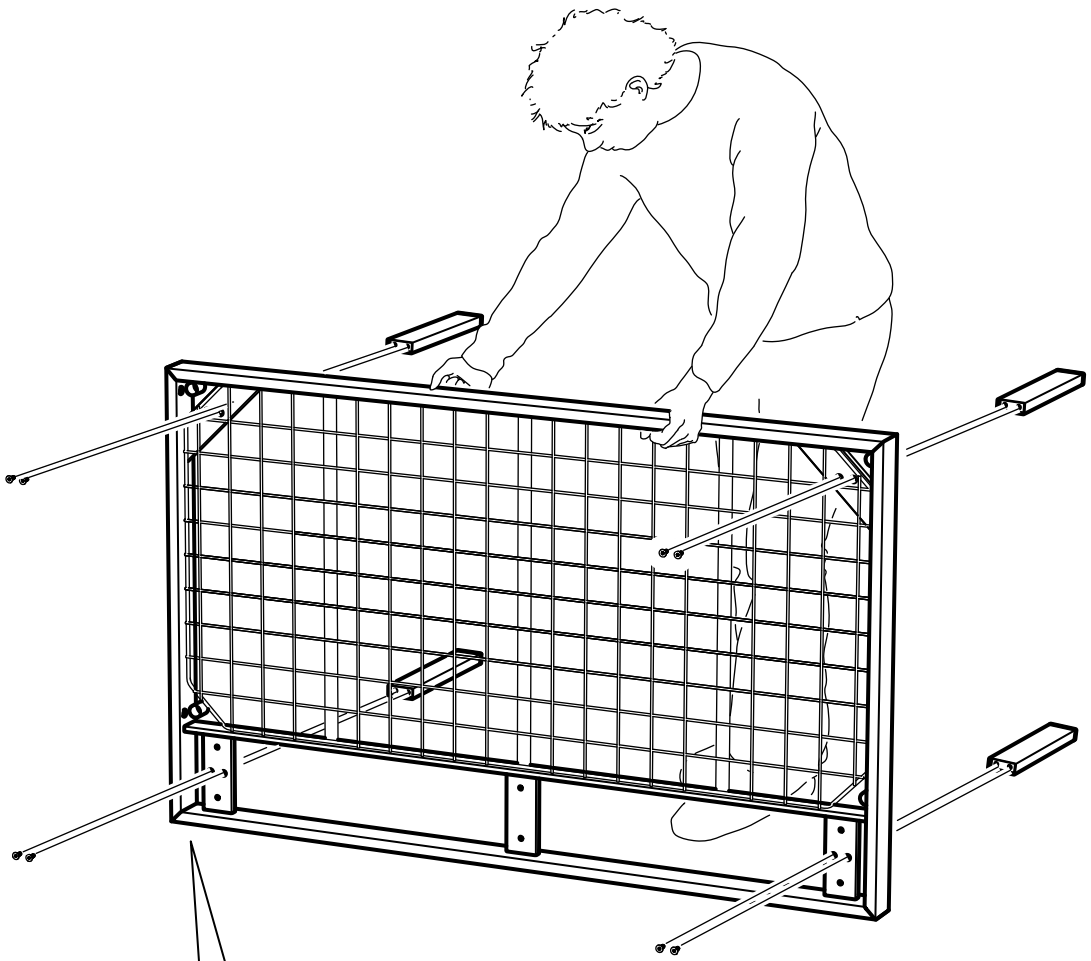

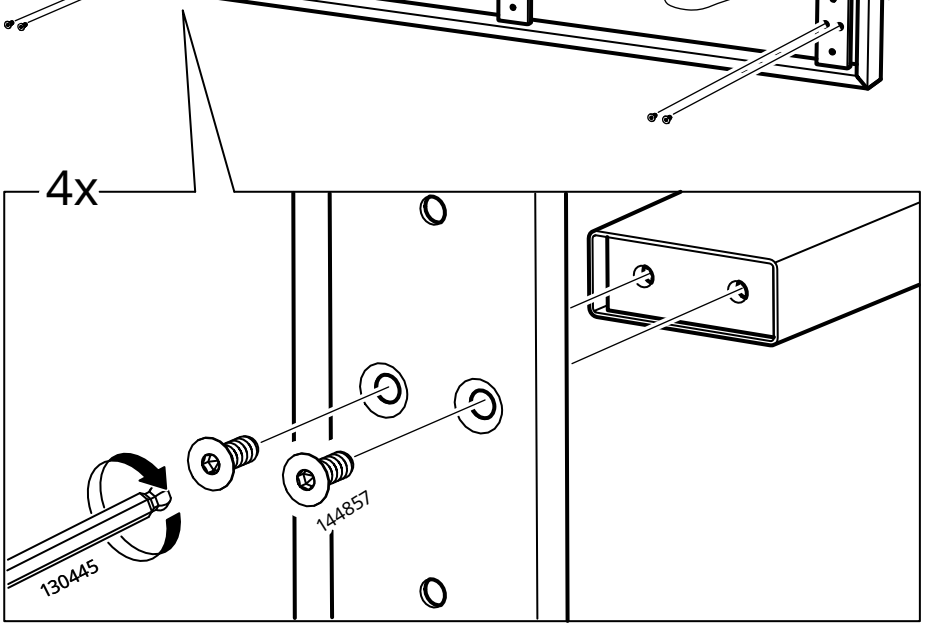

## 2

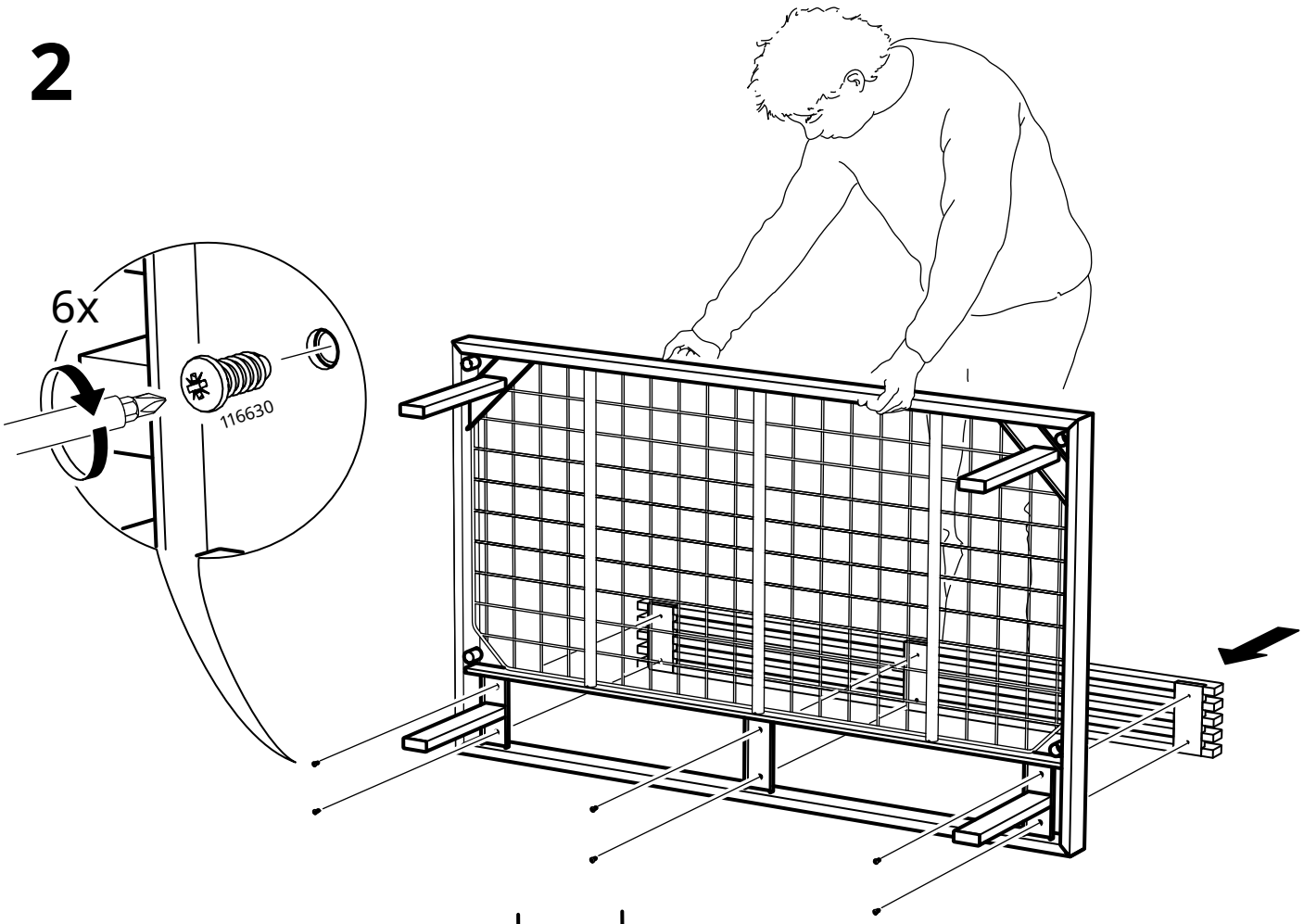


## 3

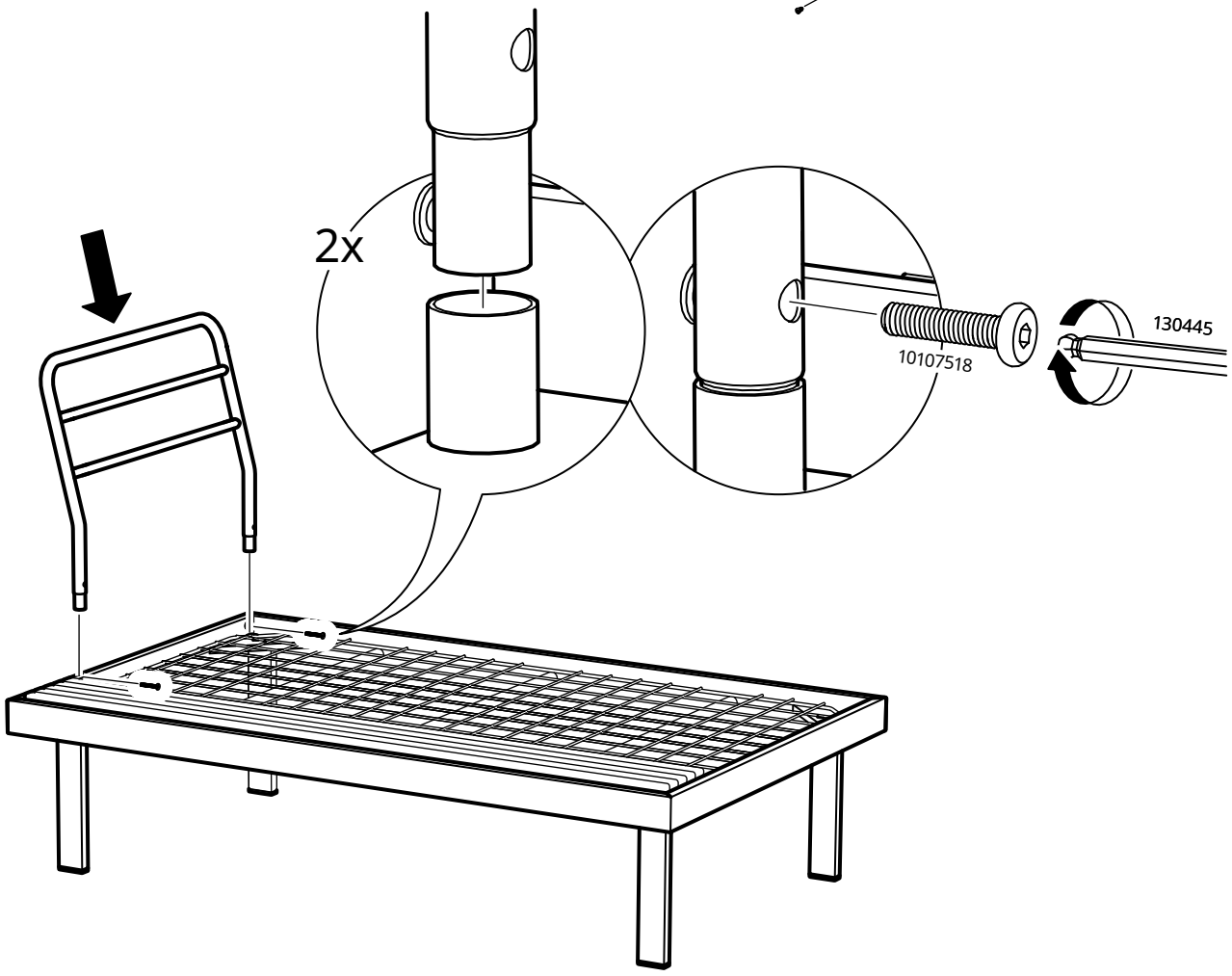

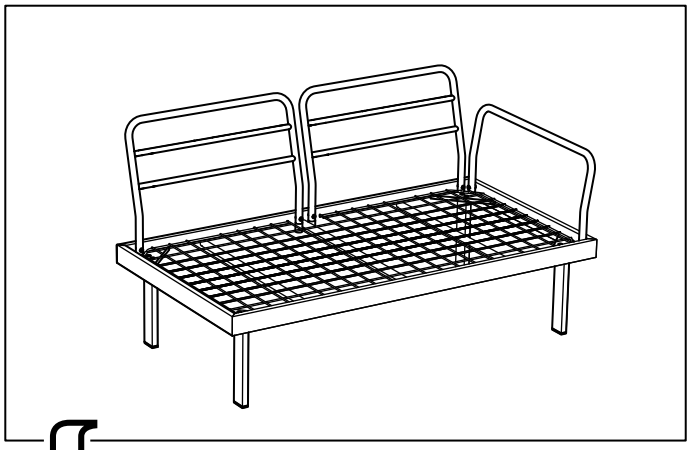

# 4

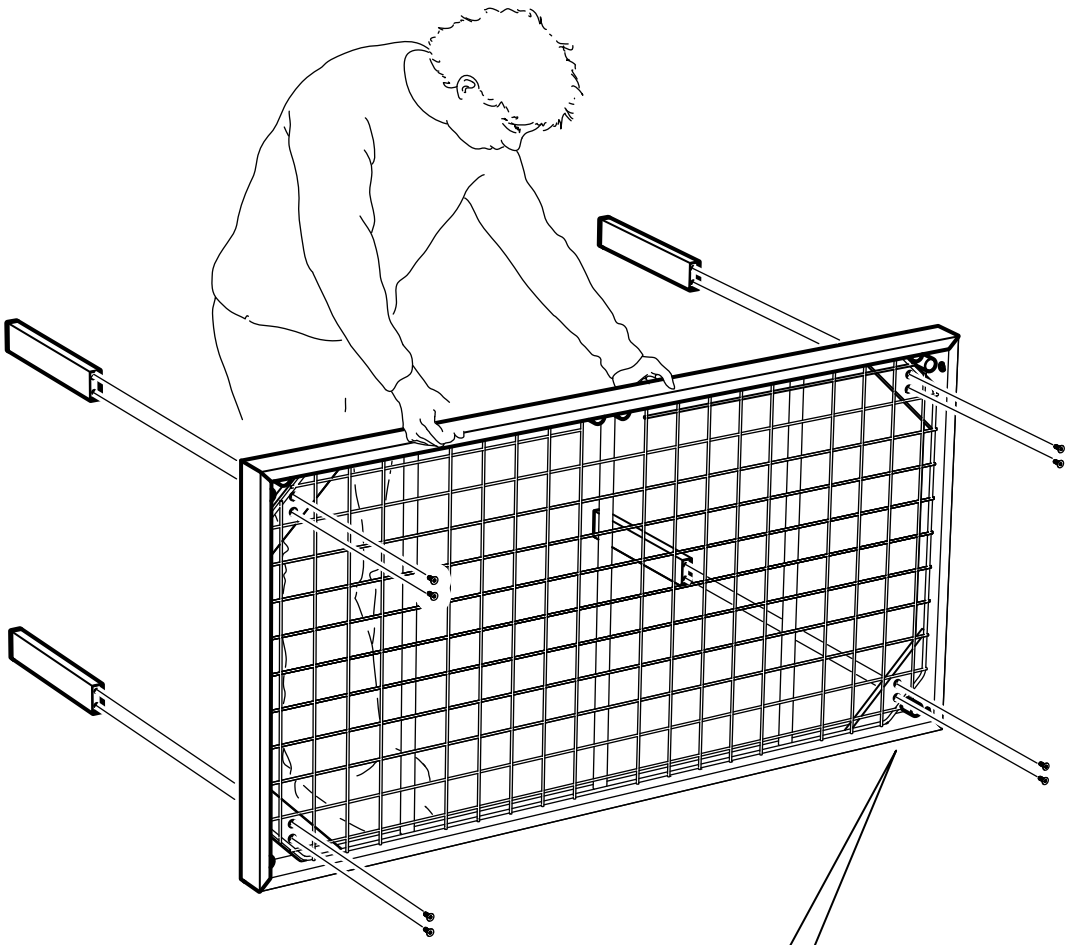

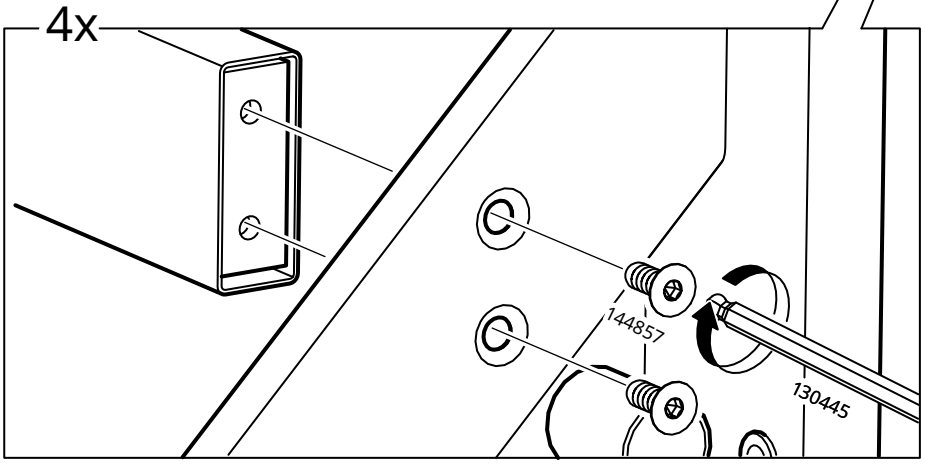

# 5

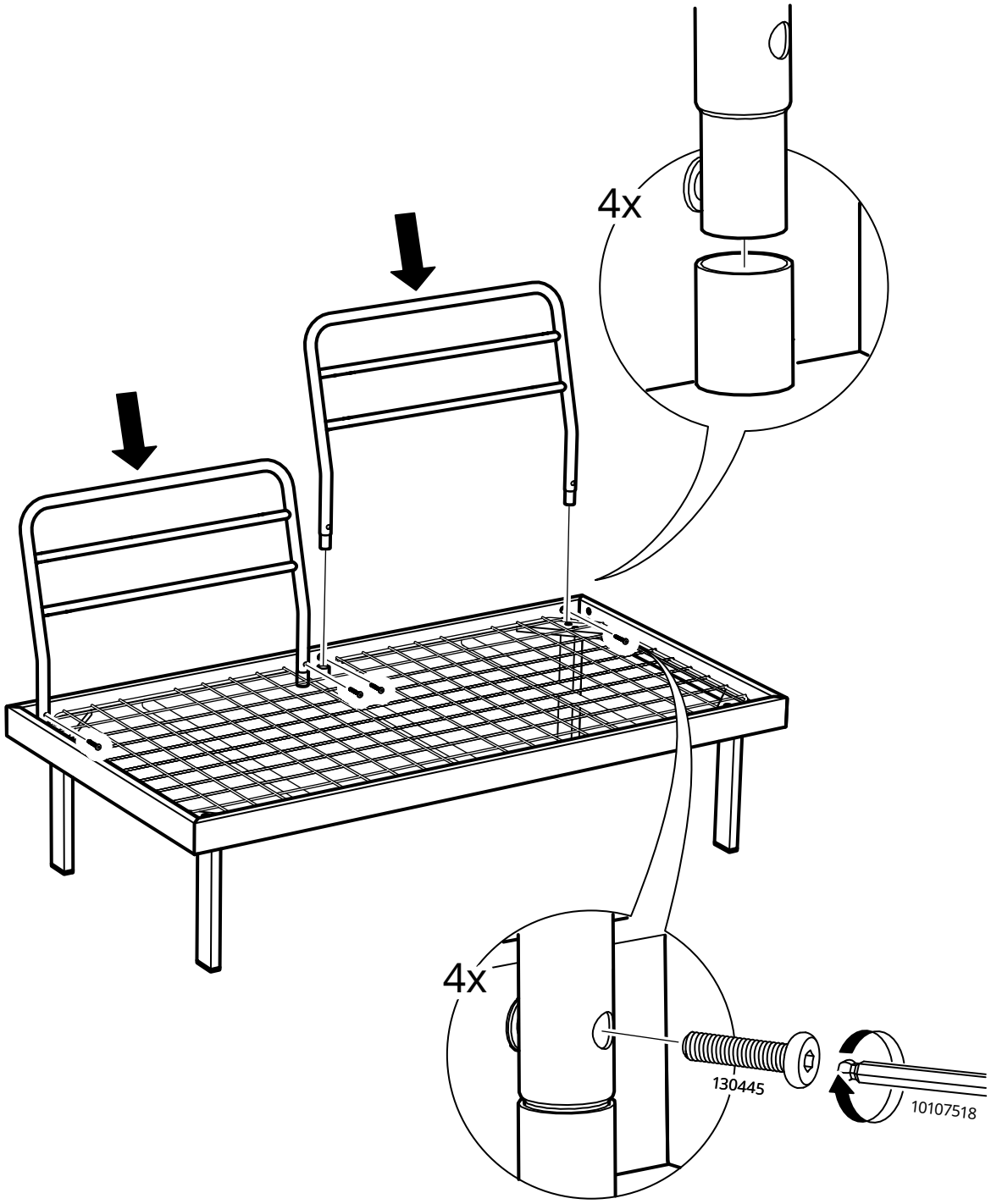

# 6

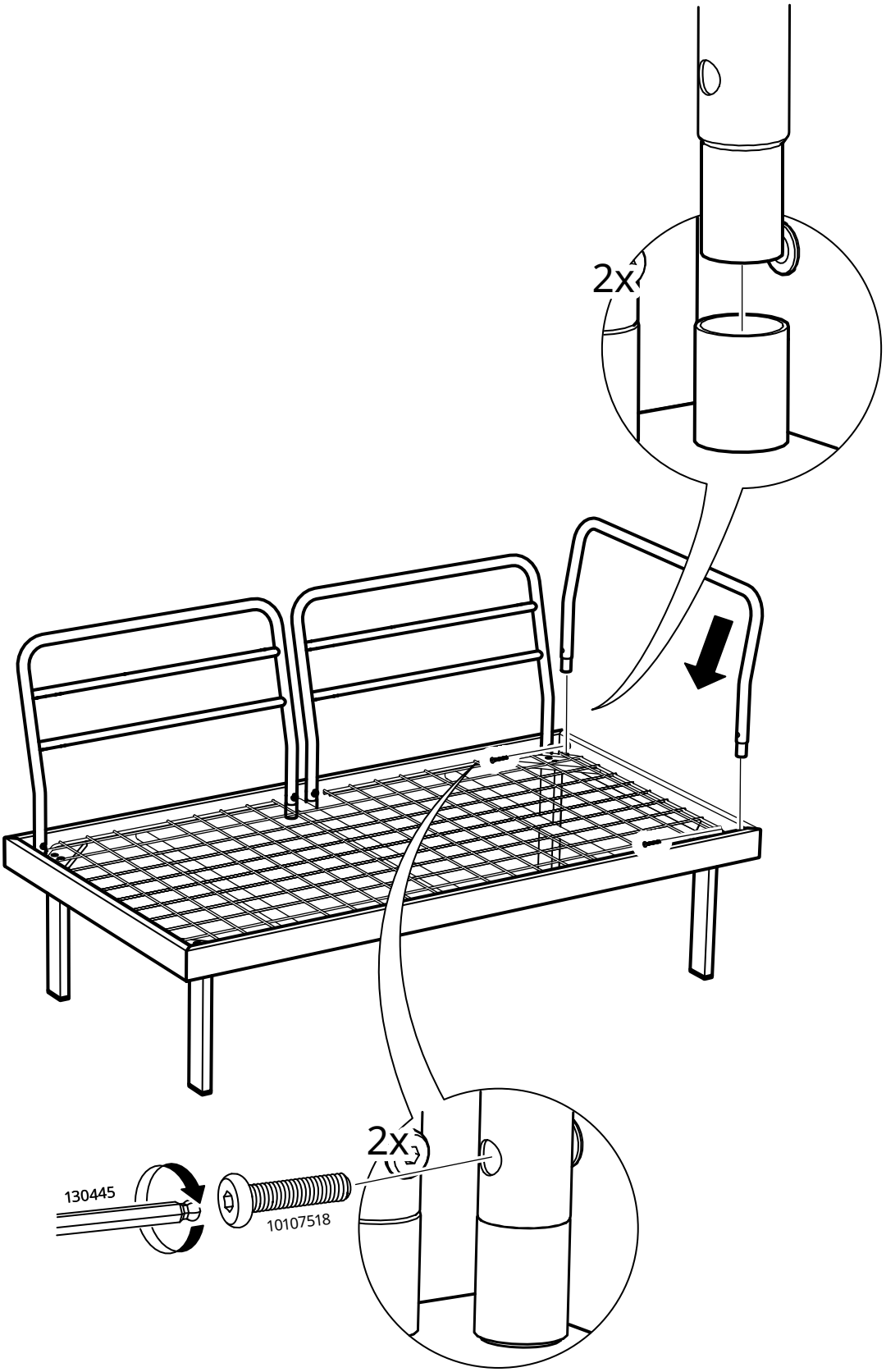

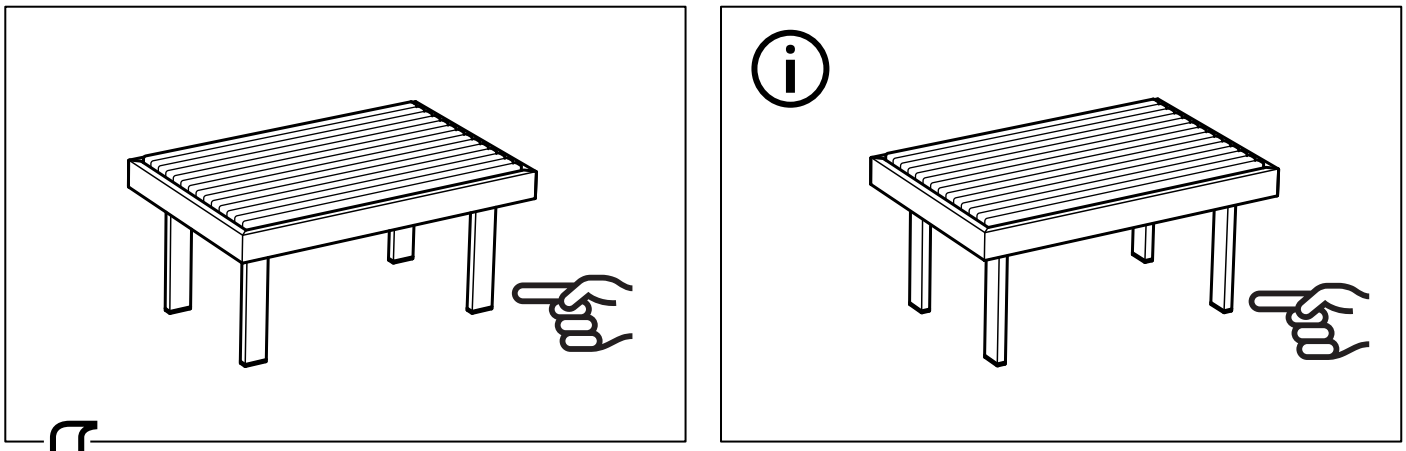

# 7

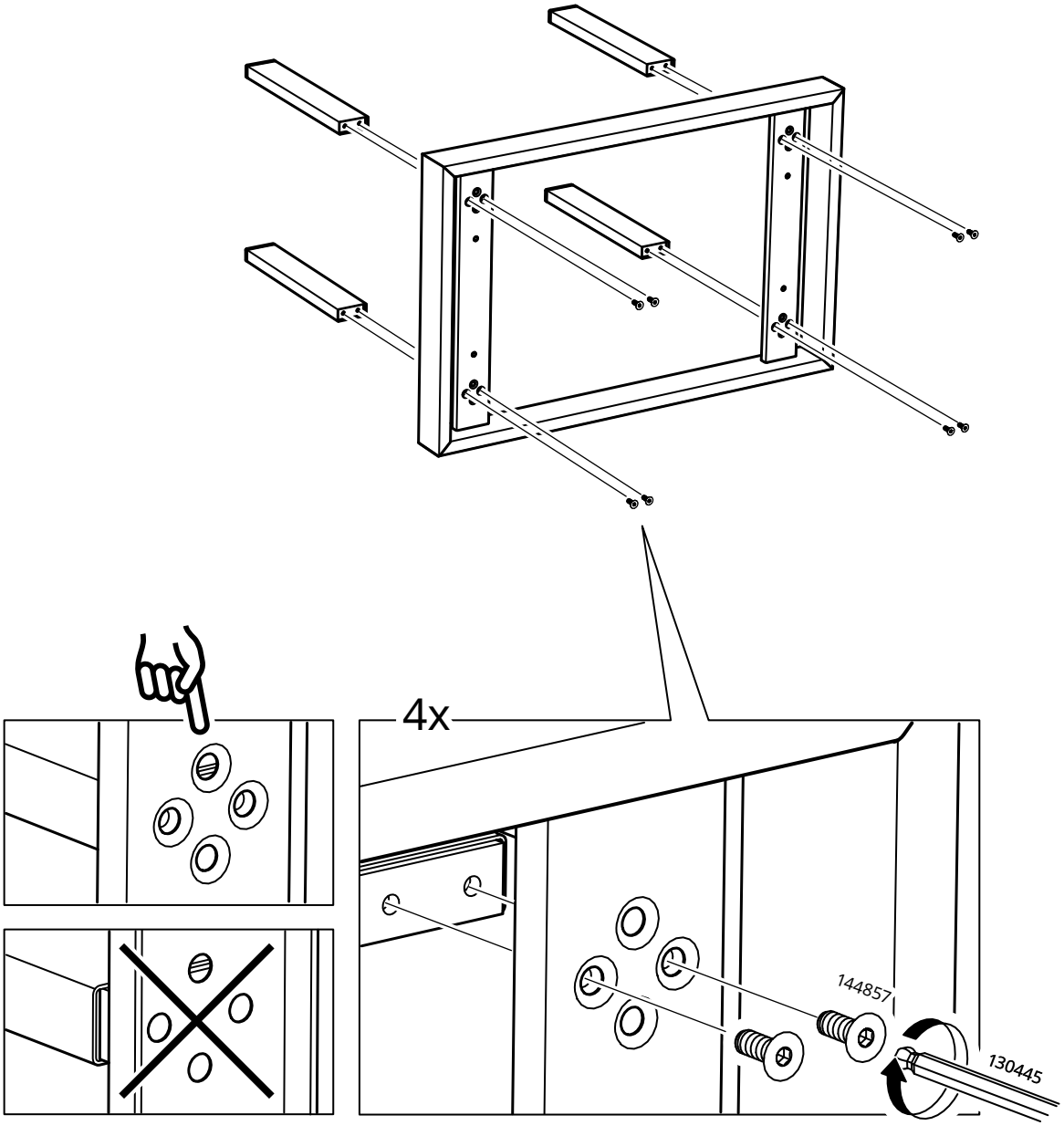

# 8

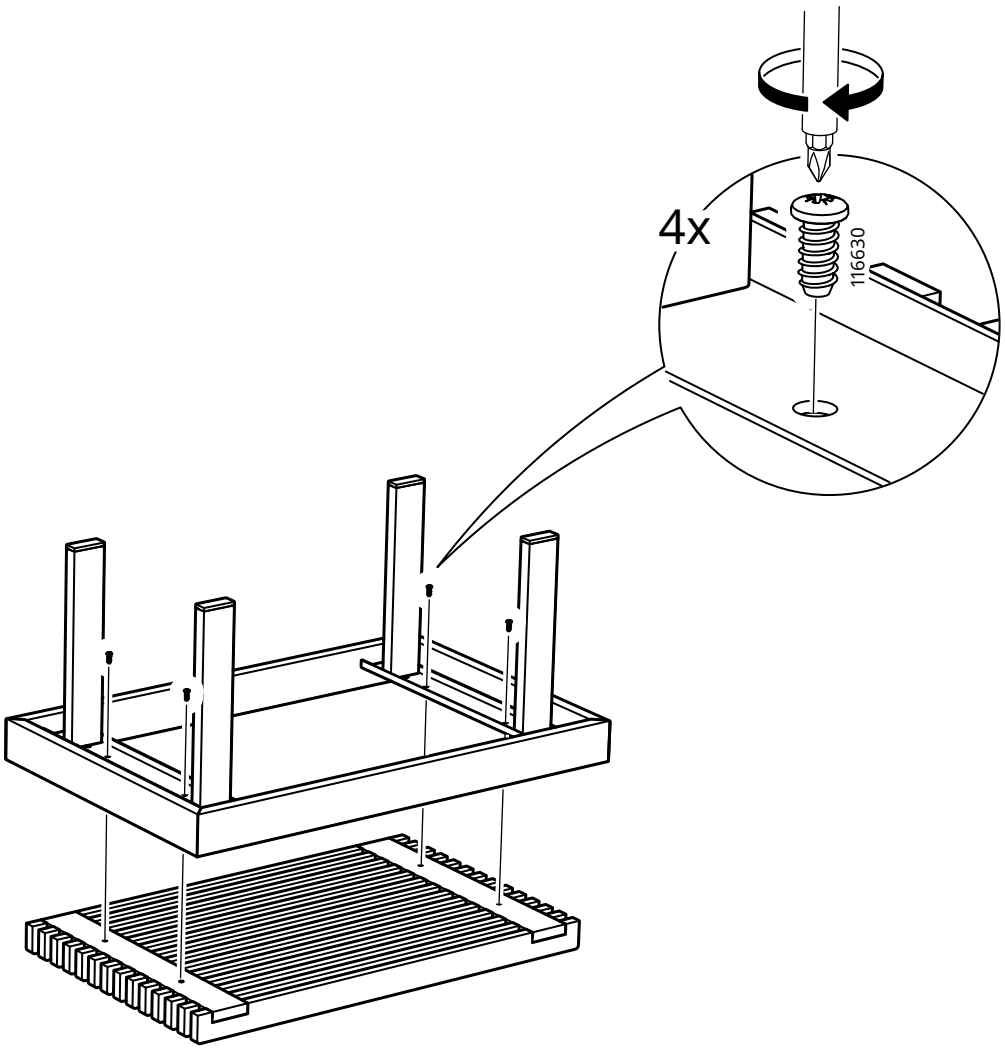

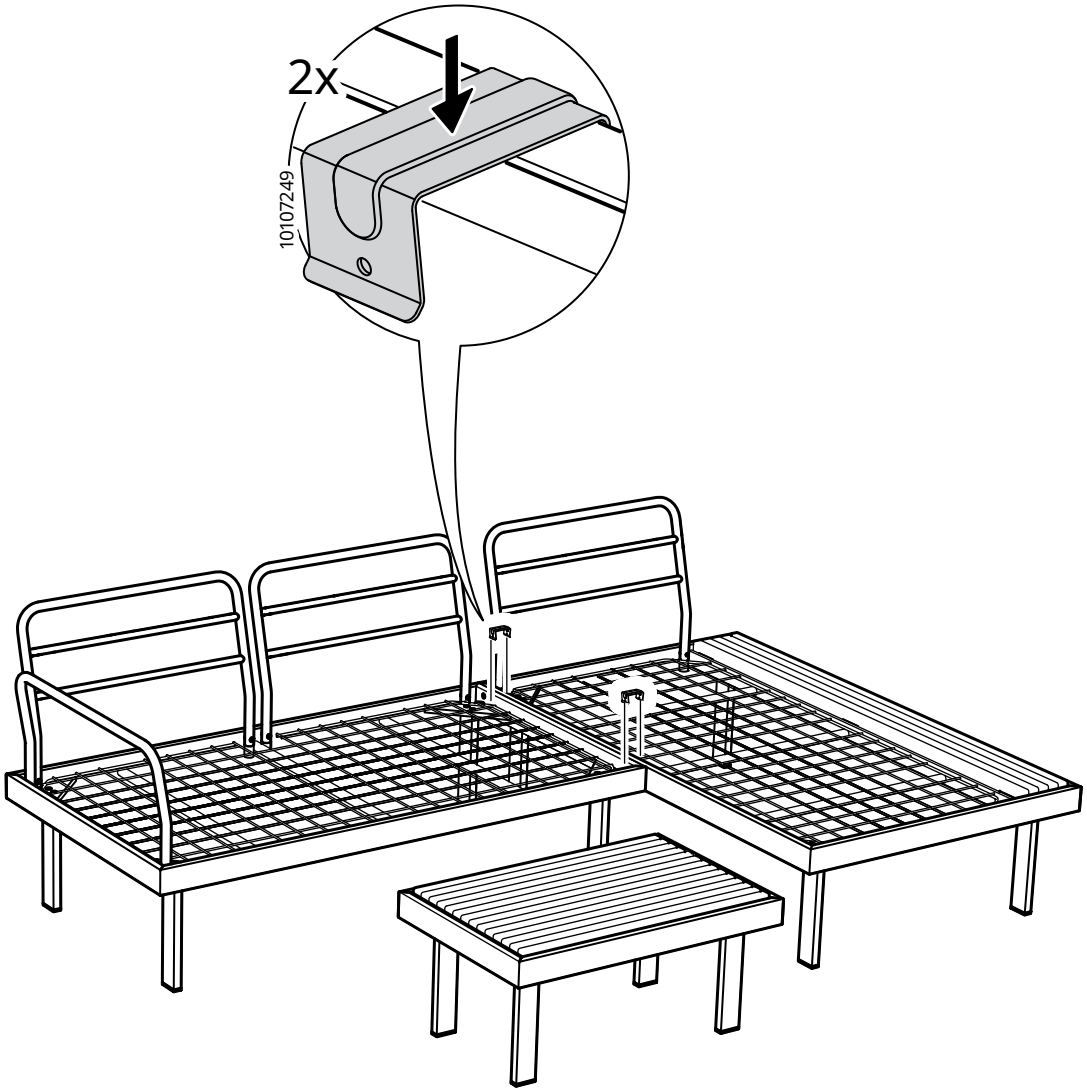
2x
10107249

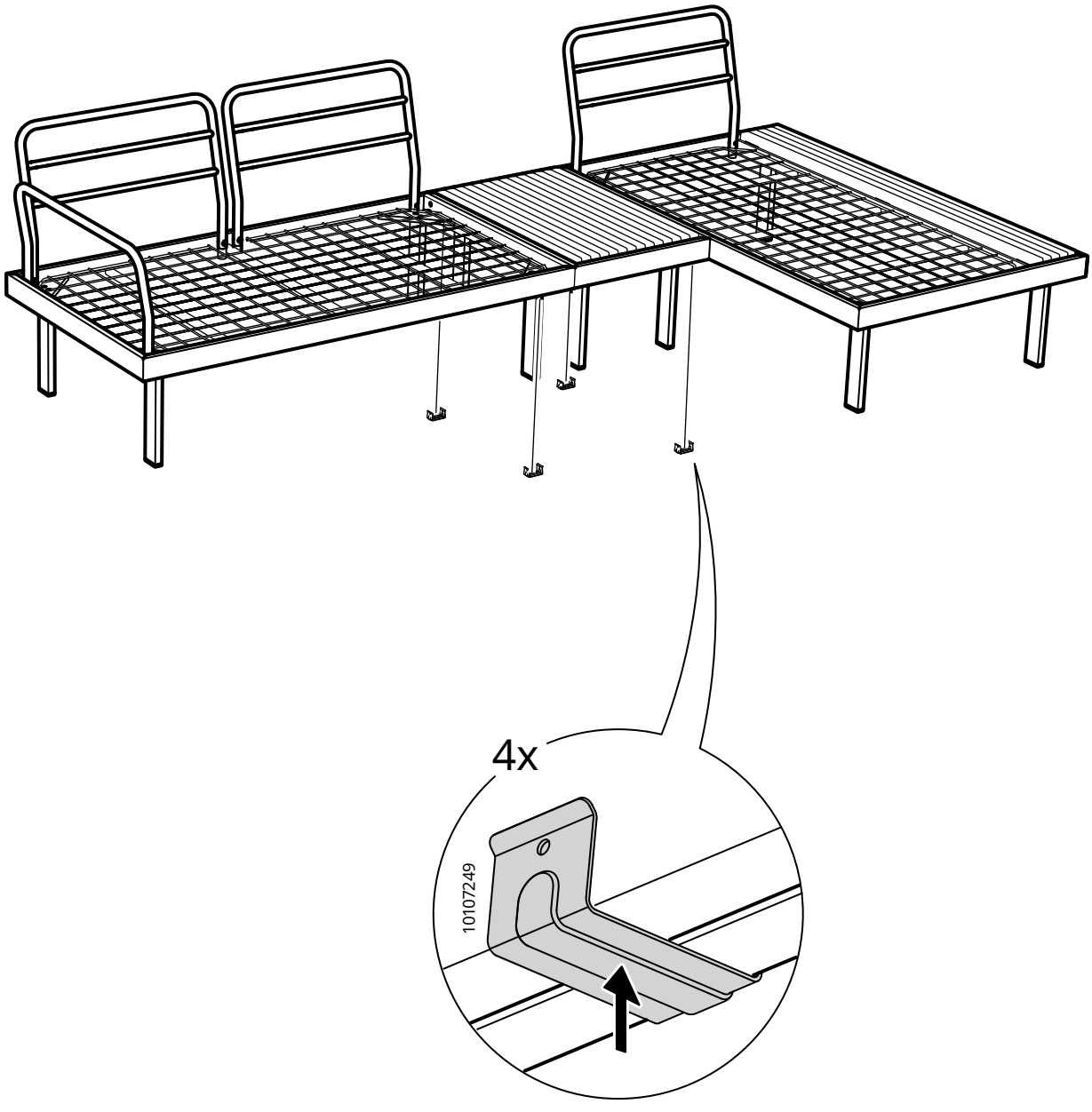
4x
10107249

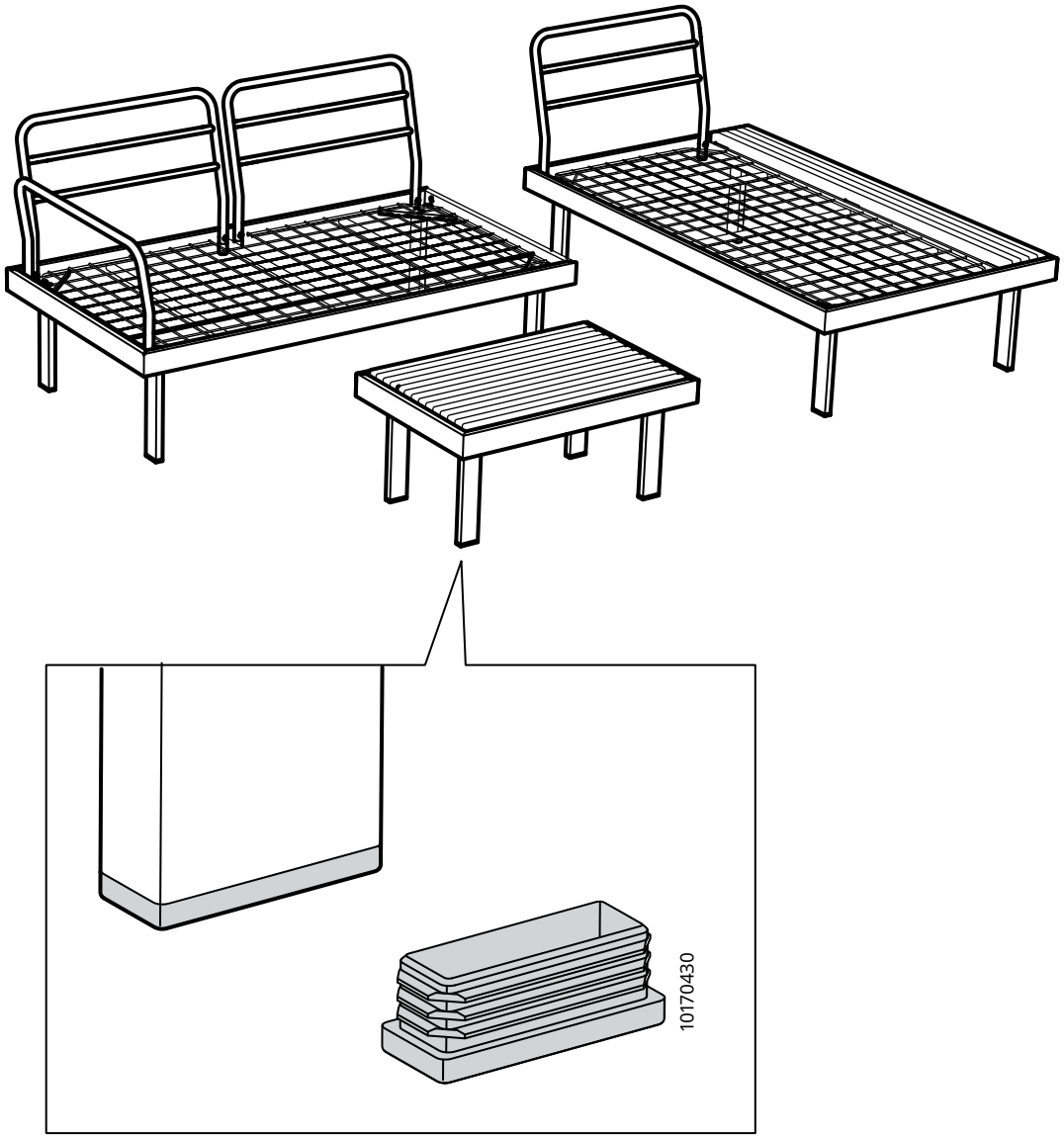
10170430

© Inter IKEA Systems B.V. 2025
2025-12-19 AA-2684250-1