NYTTIG

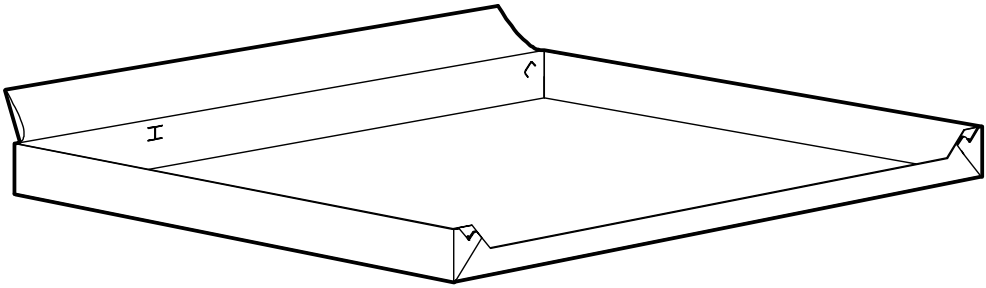

Design and Quality
IKEA of Sweden

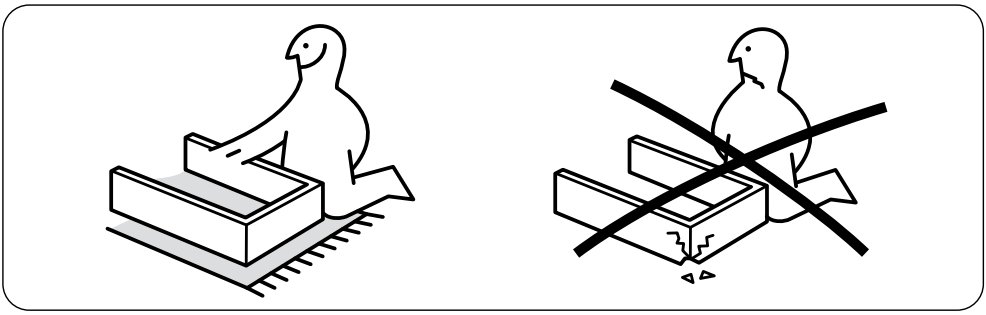

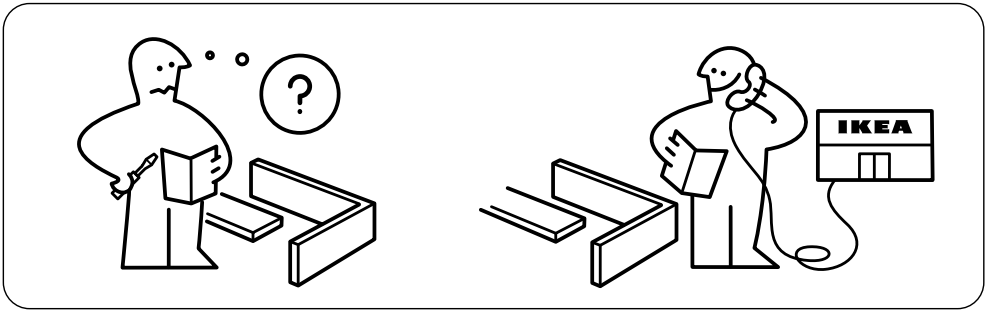
?
IKEA

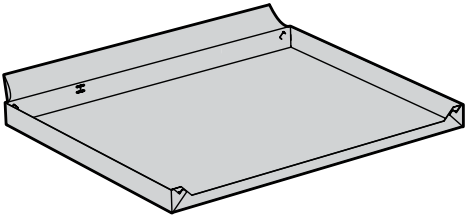

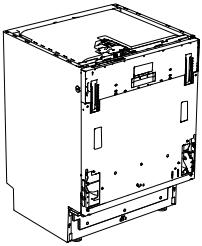

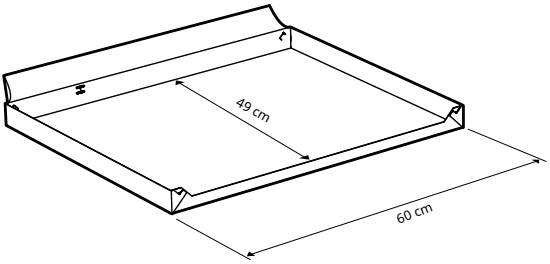
49 cm
60 cm

1

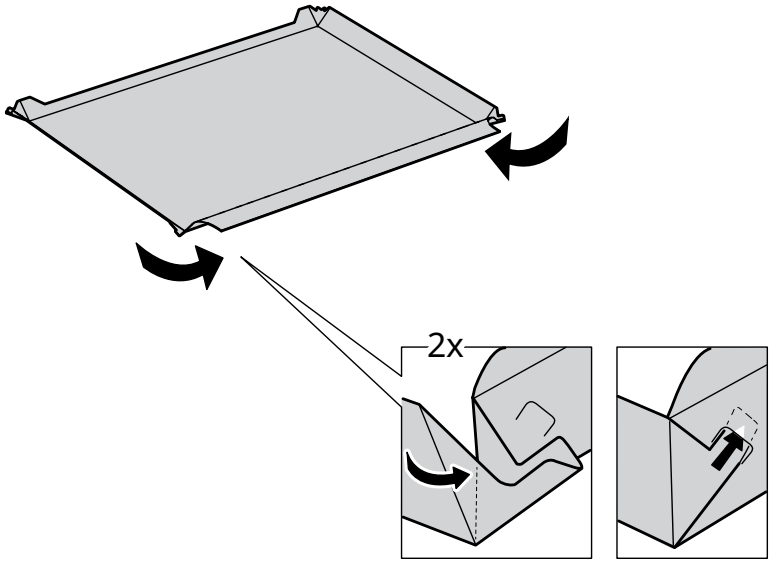

2

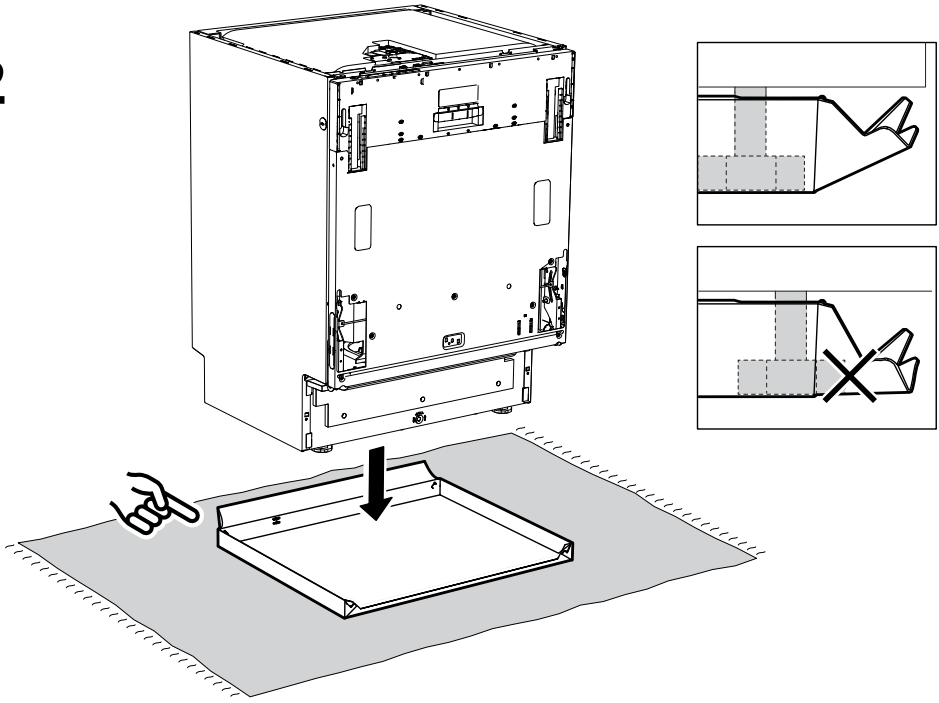

3

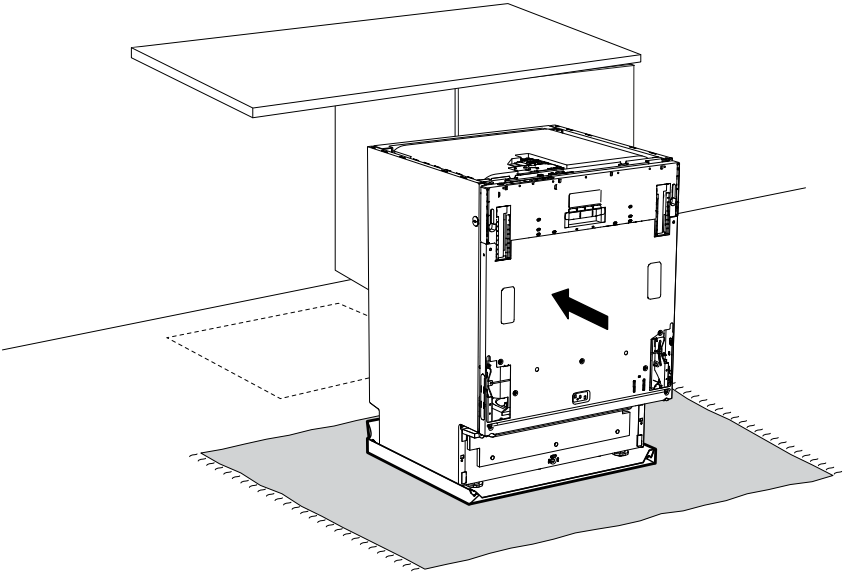

4

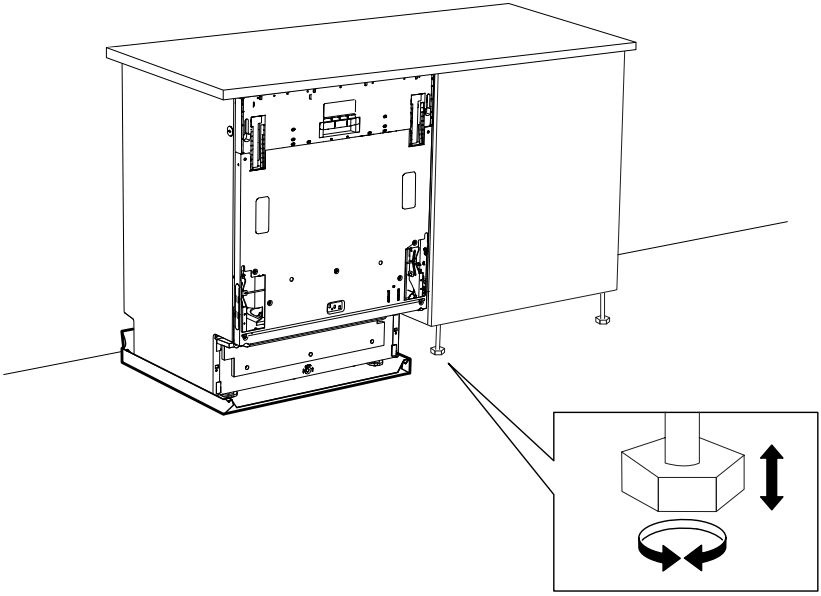

5

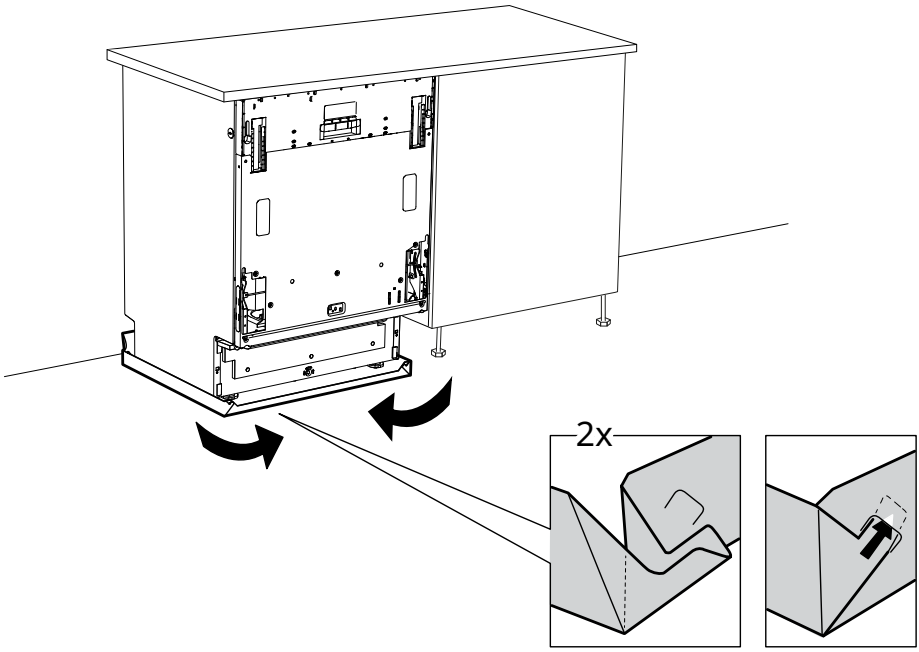

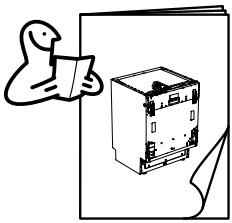

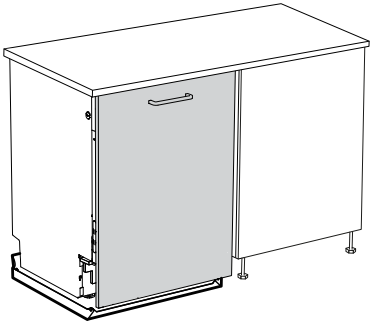

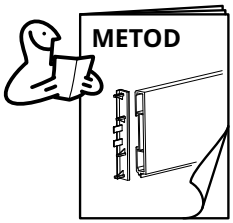
METOD

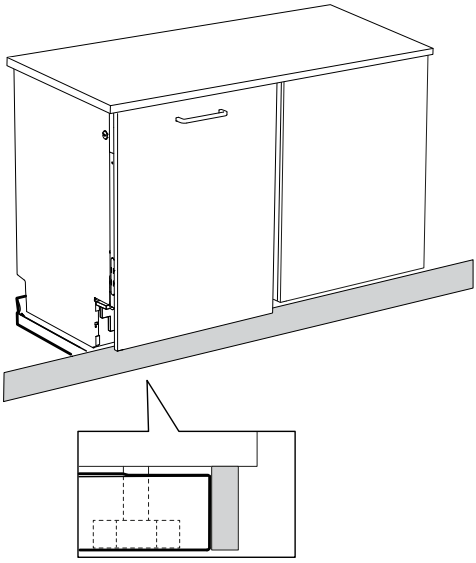

© Inter IKEA Systems B.V. 2026
2026-09-11 AA-2747374-1