MITTZON

Design and Quality
IKEA of Sweden

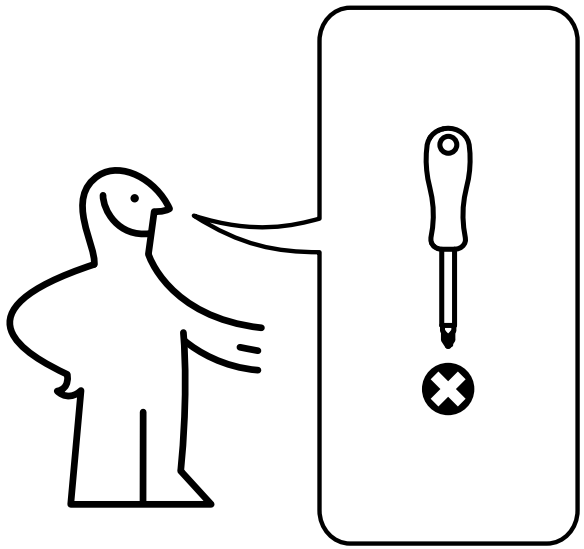

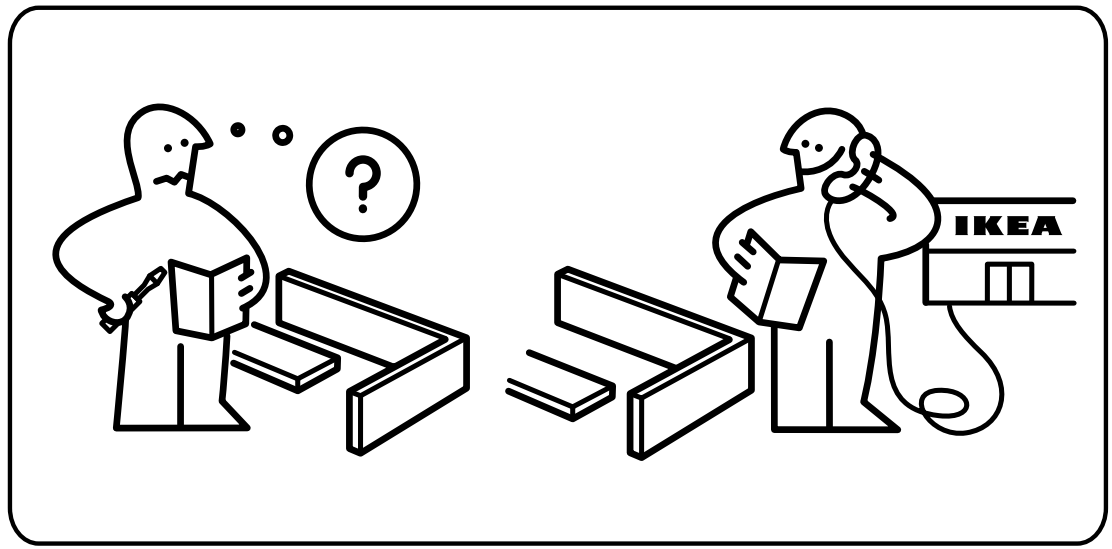

1

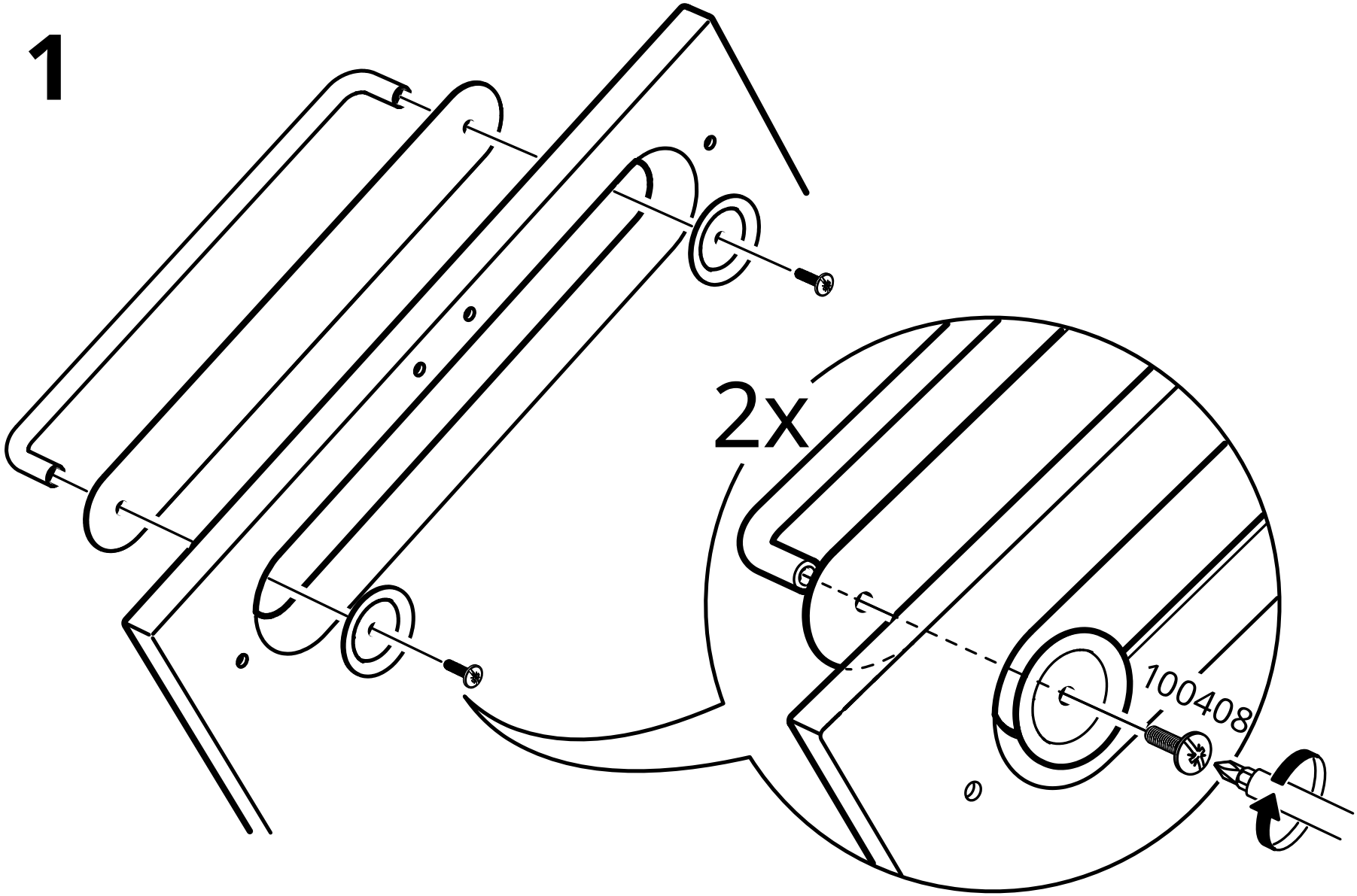

© Inter IKEA Systems B.V. 2025 2026-02-02 AA-2690180-2