KULLASKÄR

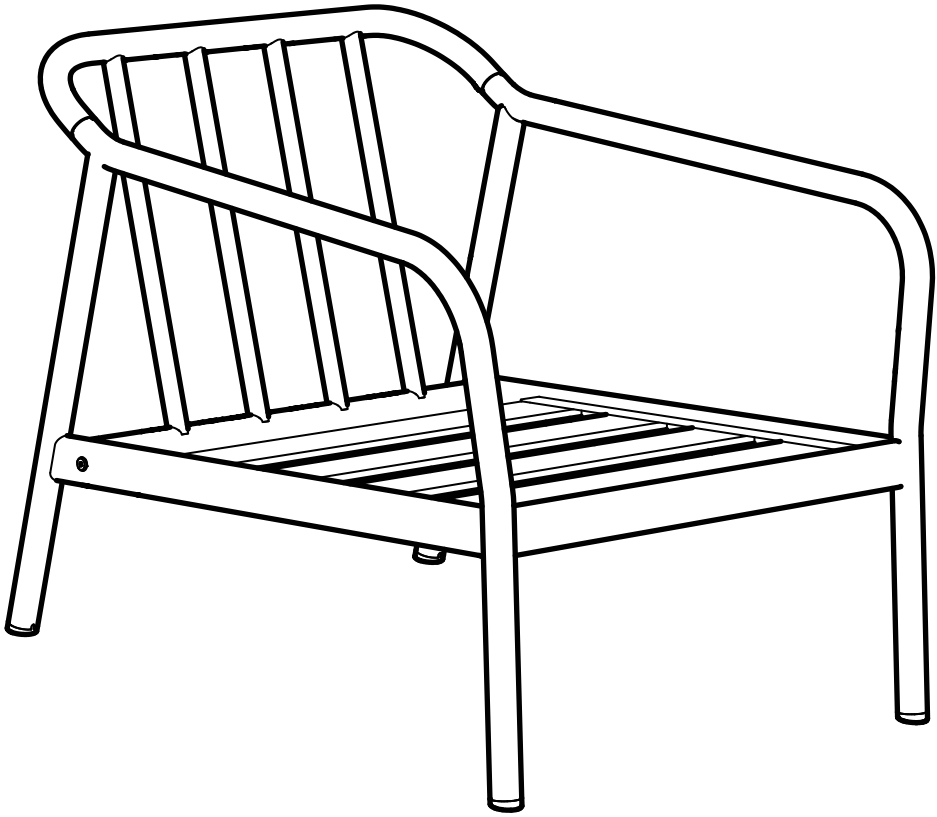

Design and Quality
IKEA of Sweden

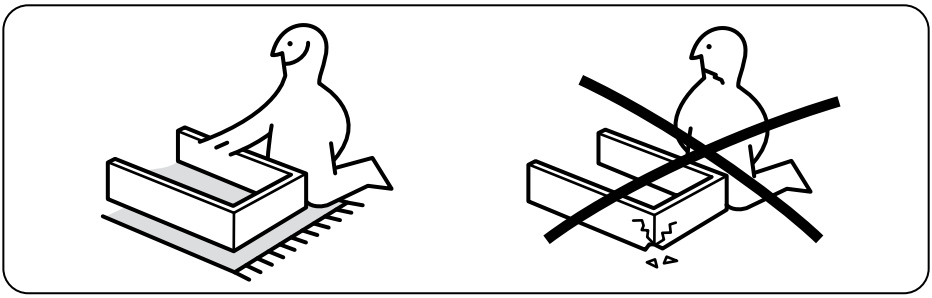

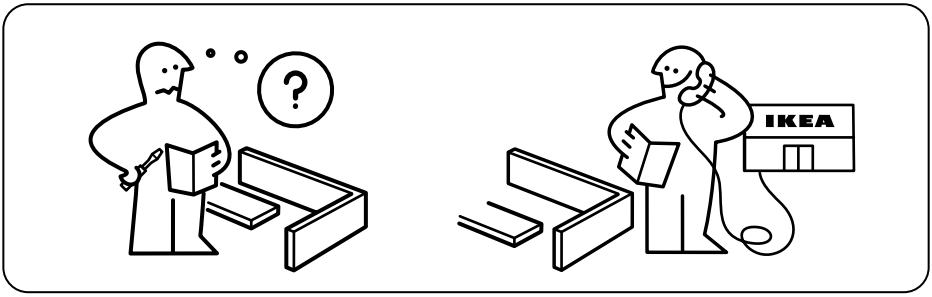
?
IKEA



1x

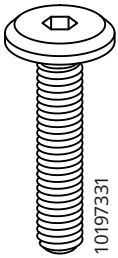

8x

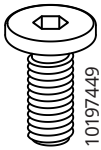

2x

1

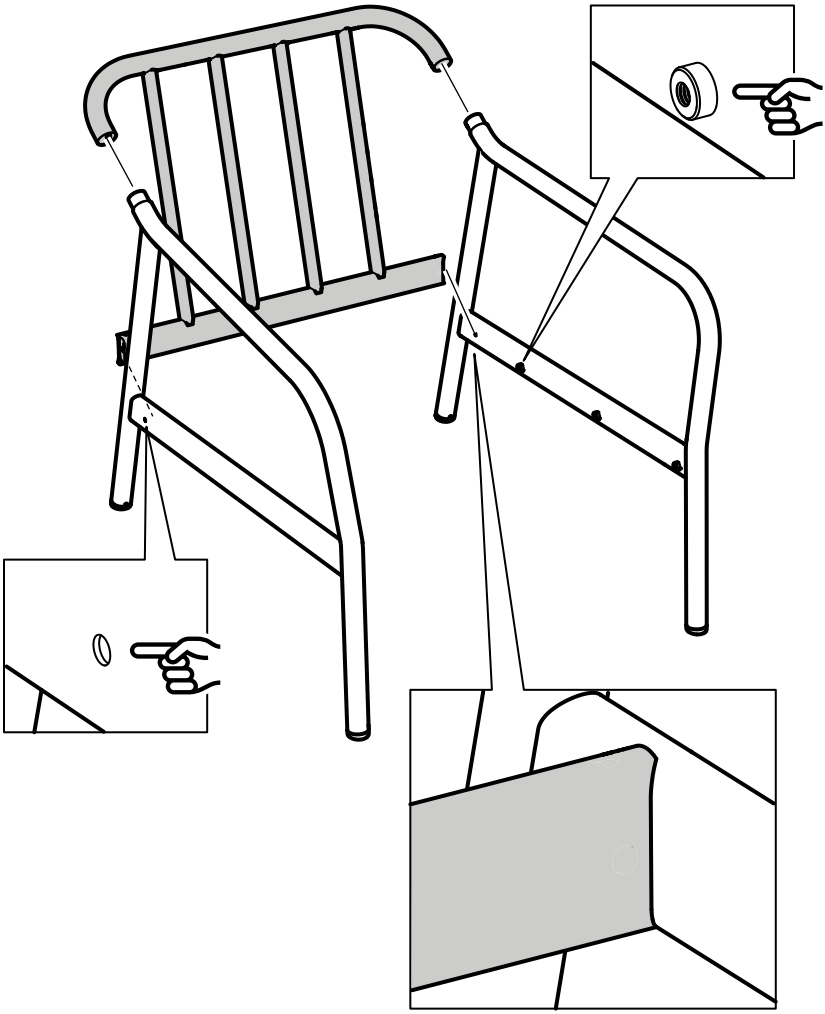

2

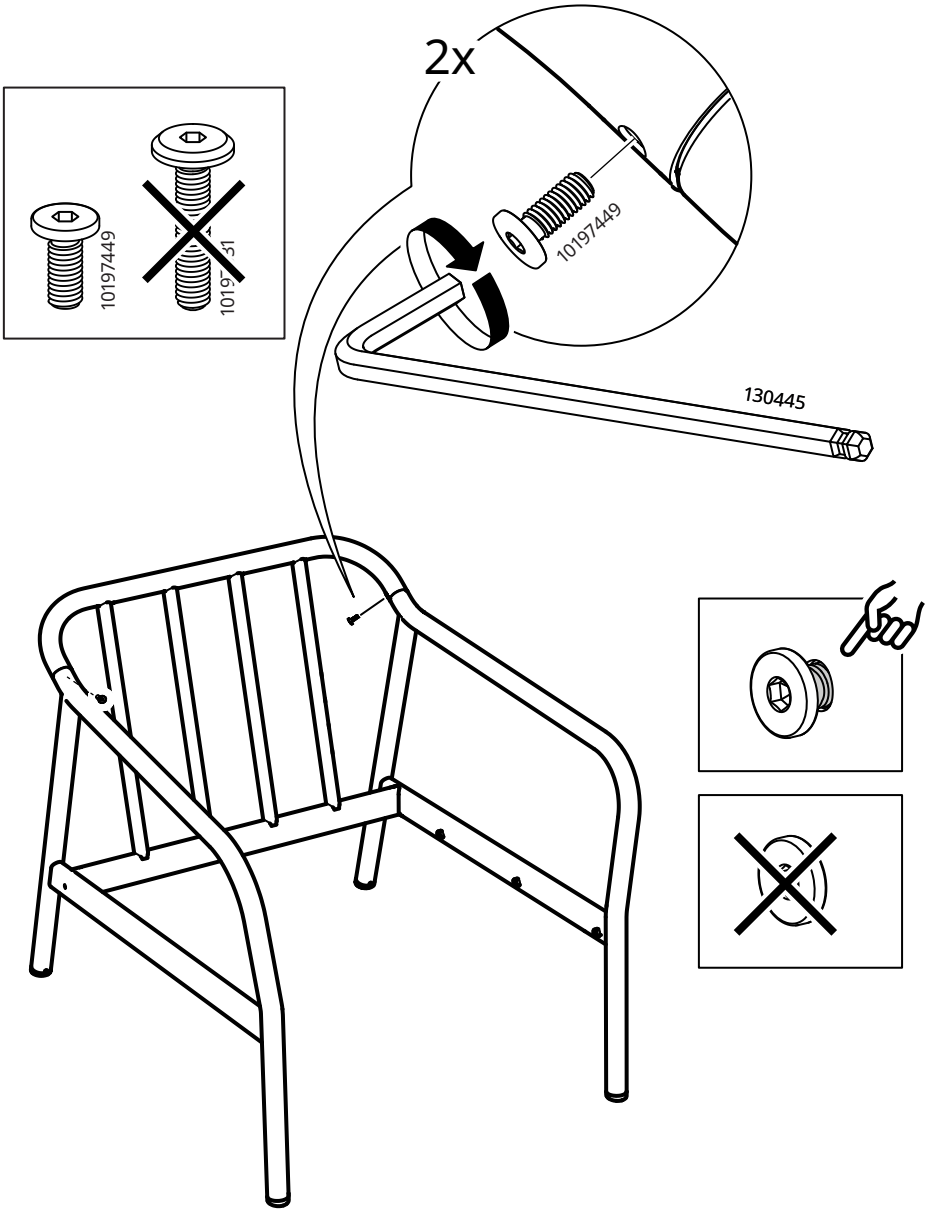

3

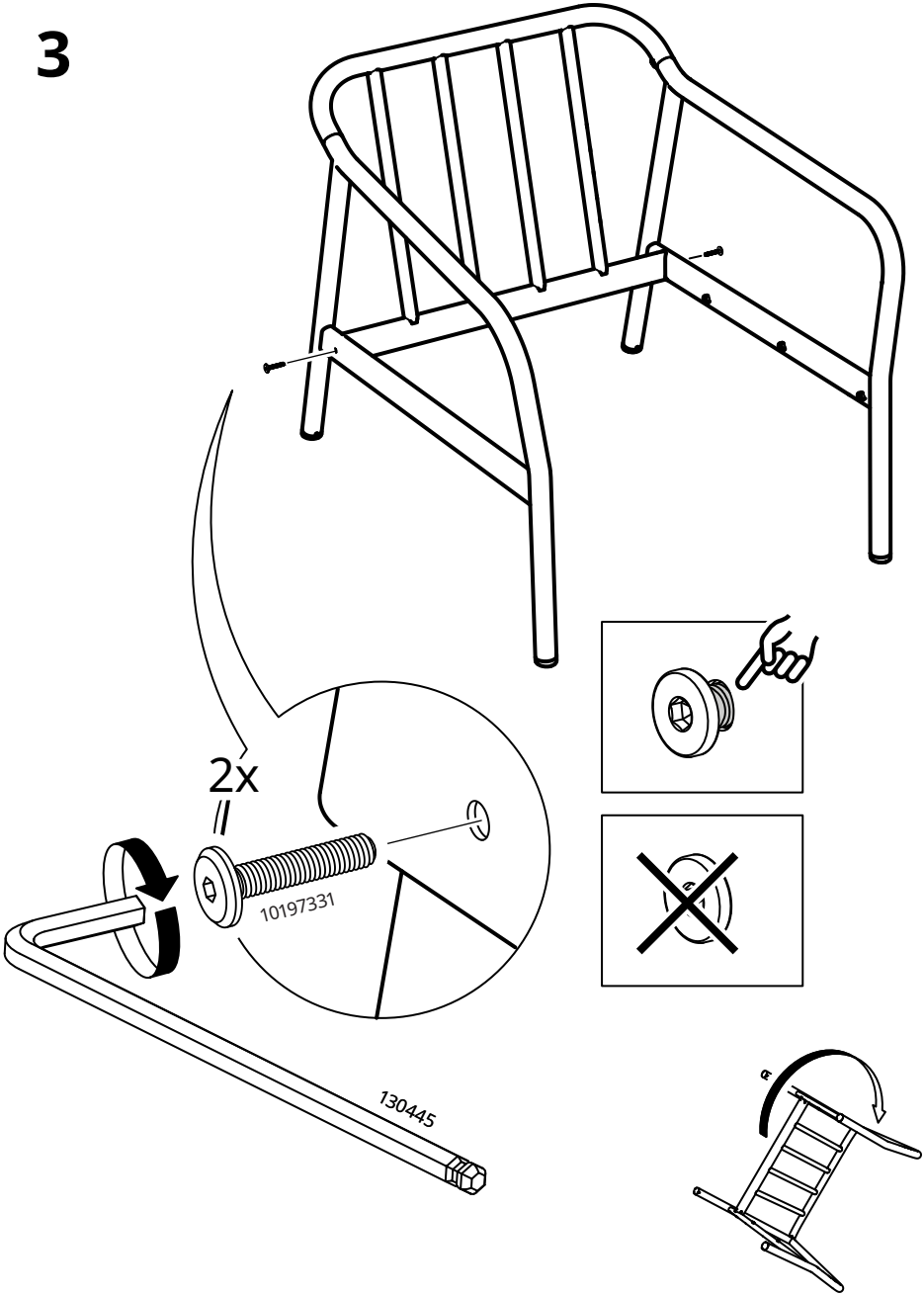

4

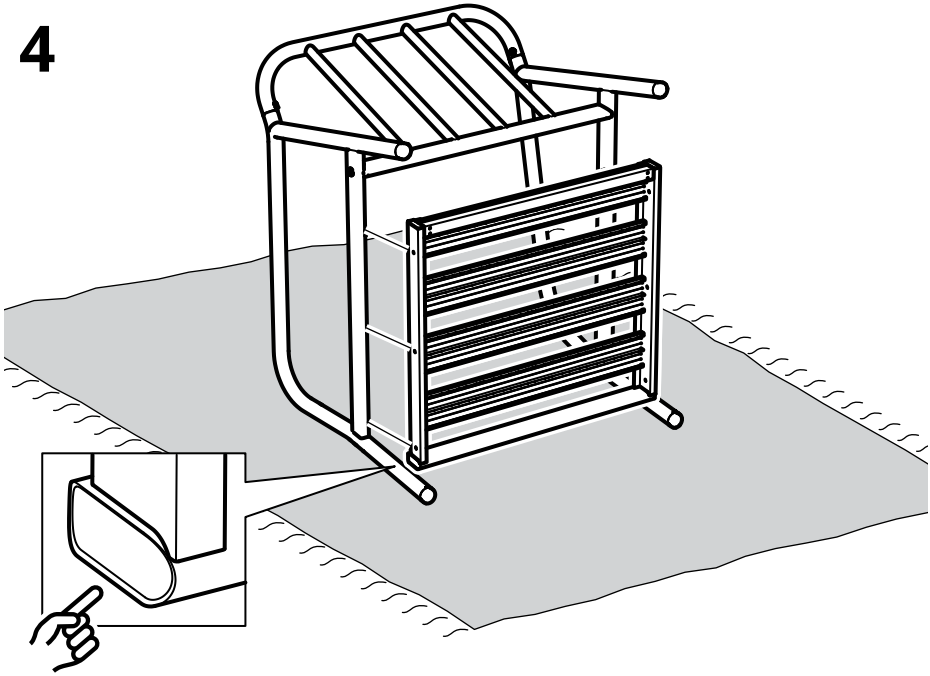

5

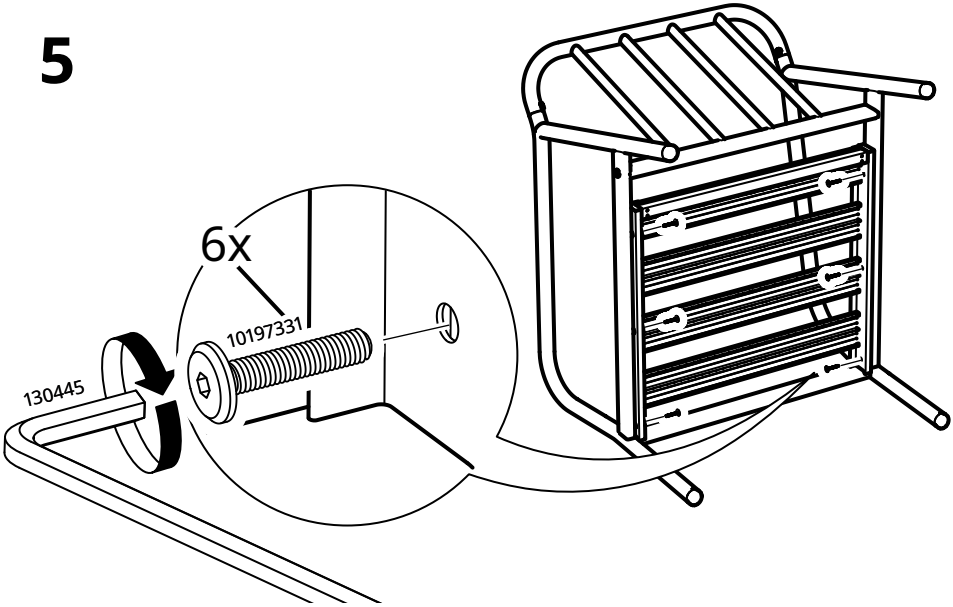

6

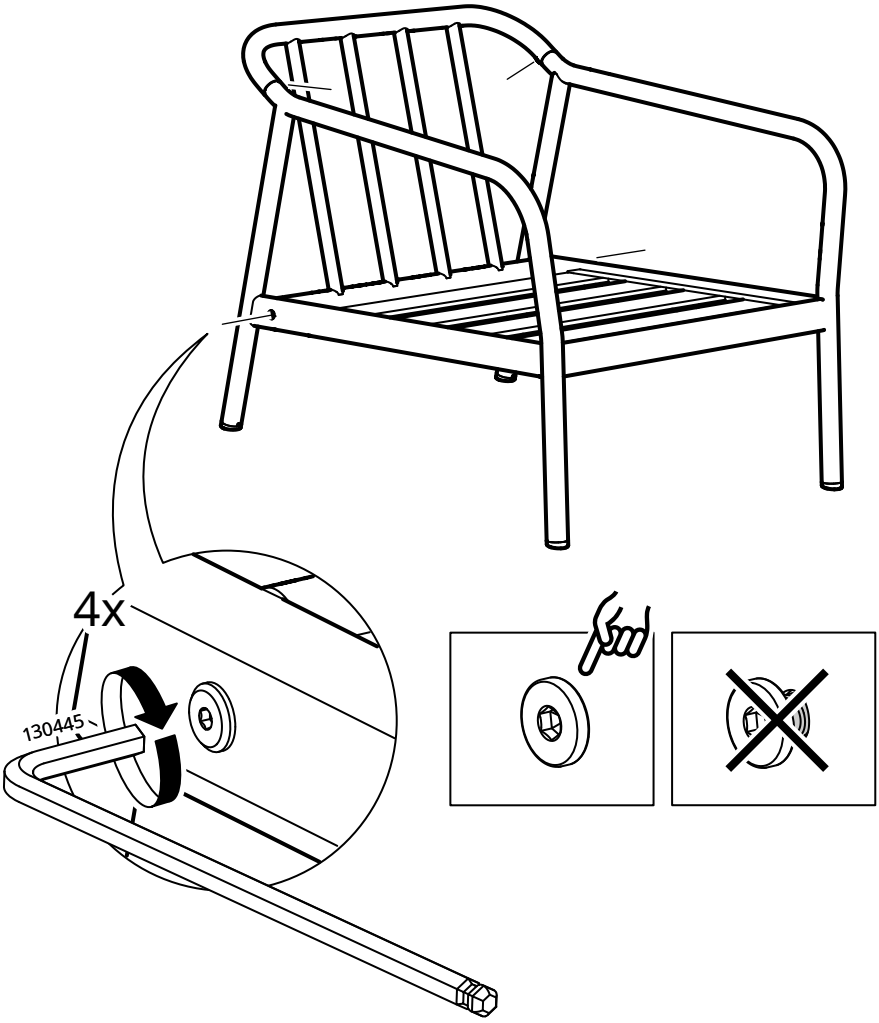

© Inter IKEA Systems B.V. 2026