KULLASKÄR

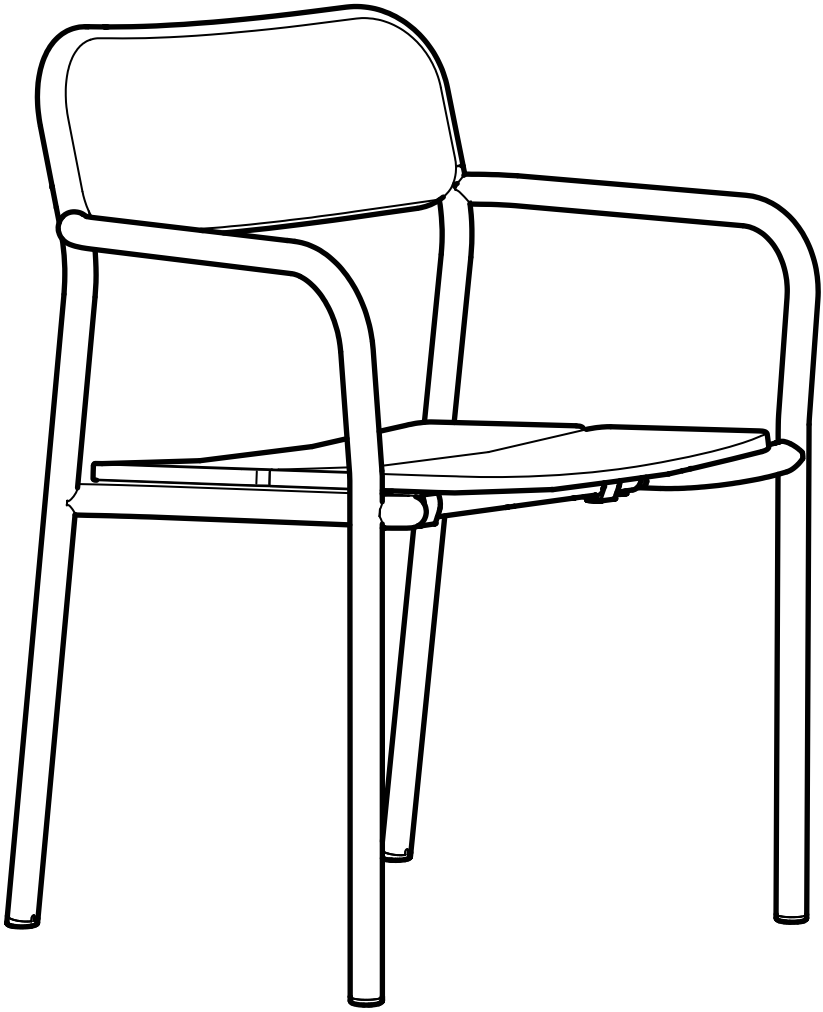

Design and Quality
IKEA of Sweden

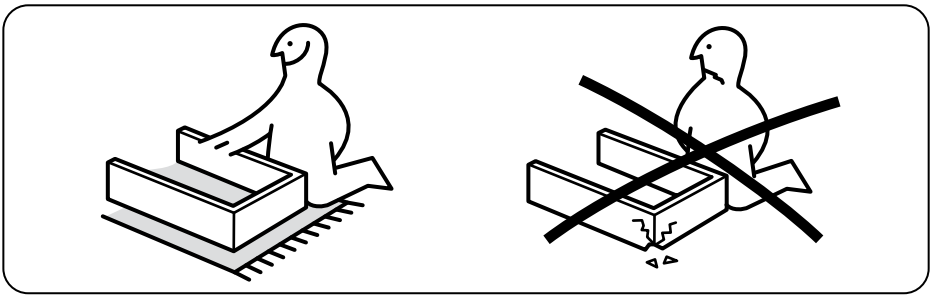

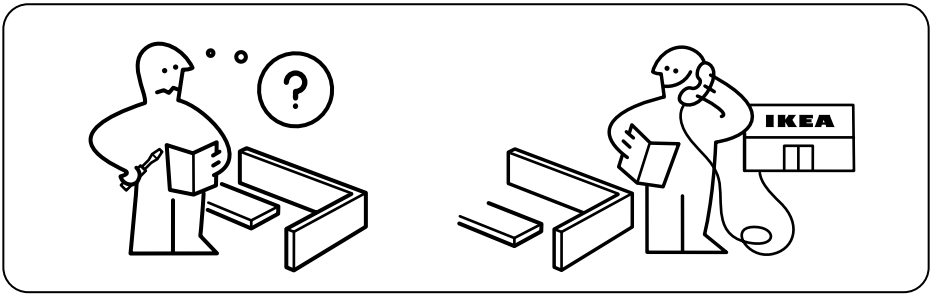
?
IKEA



1x

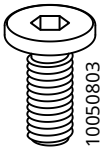

4x



2x

1

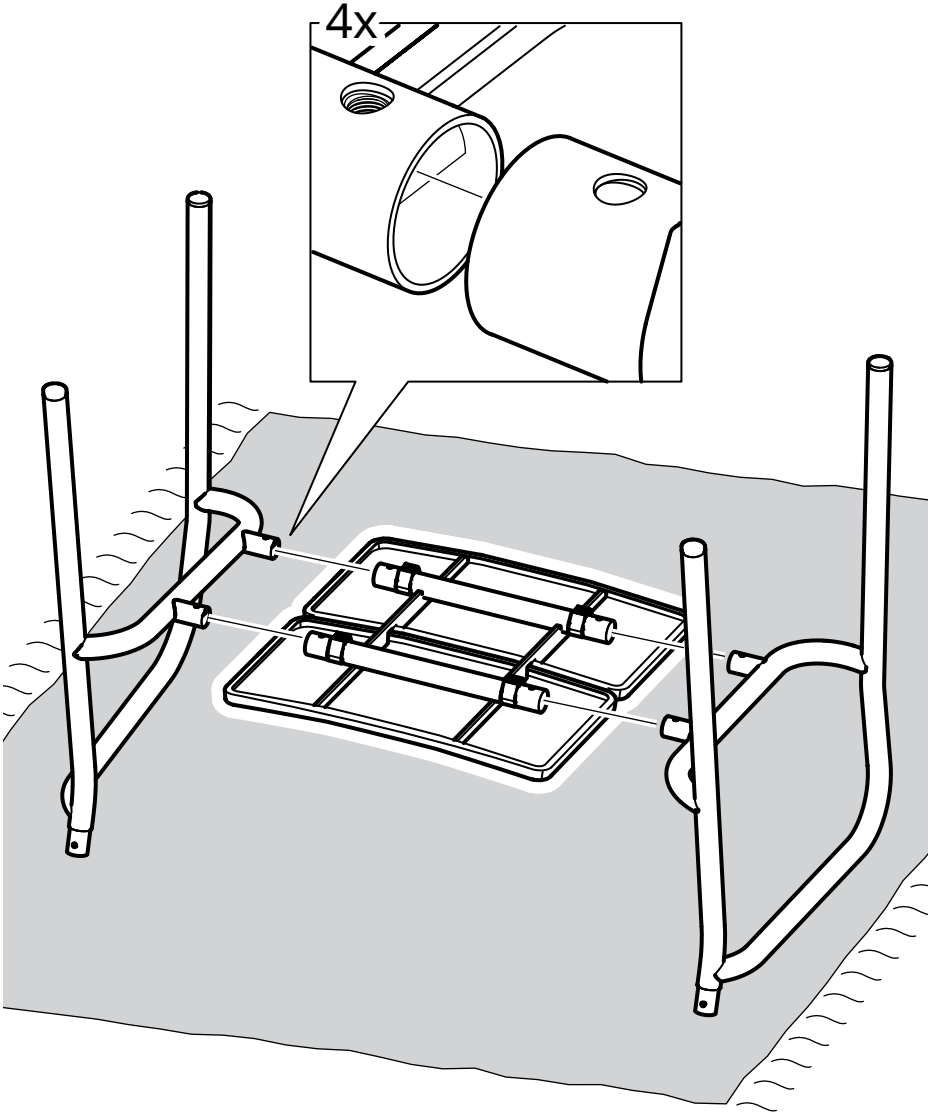

2

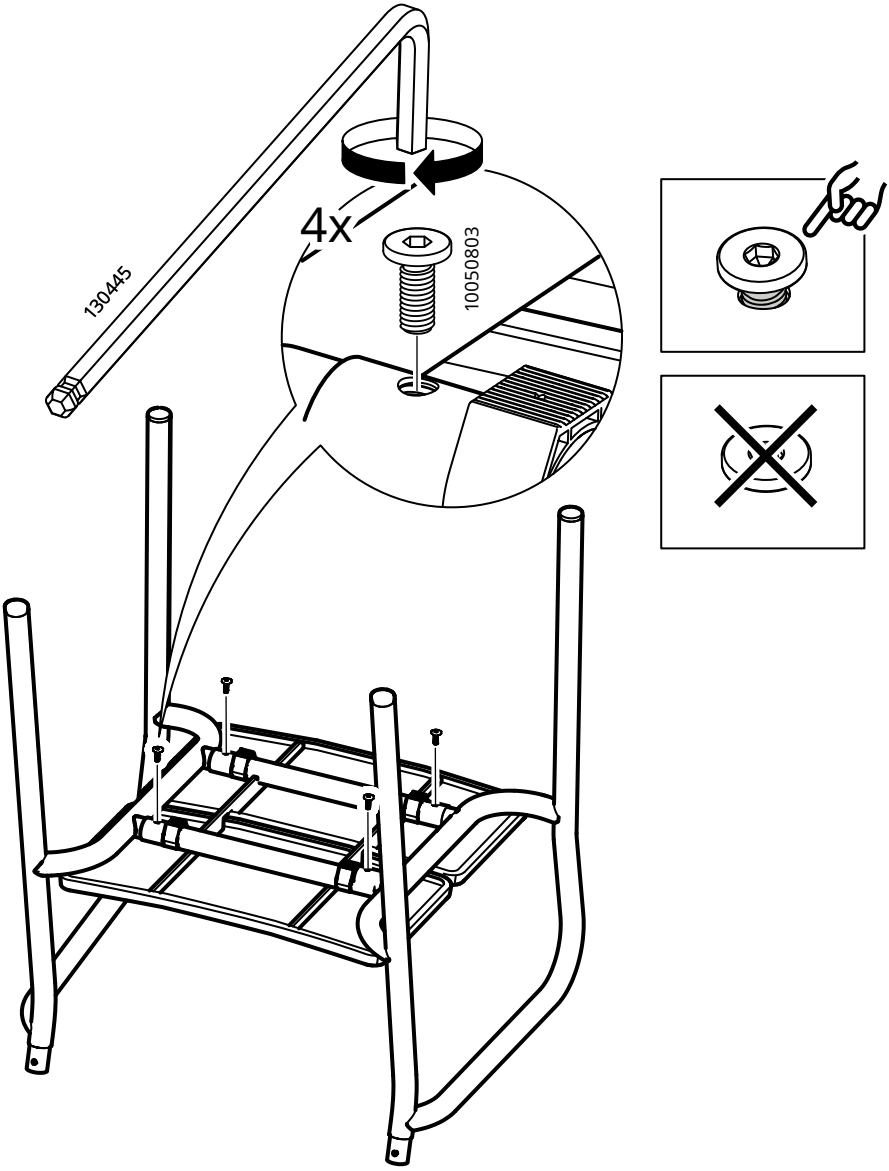

3

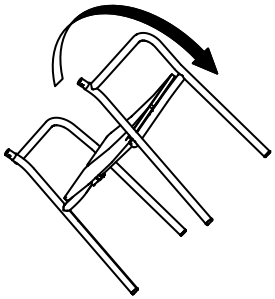

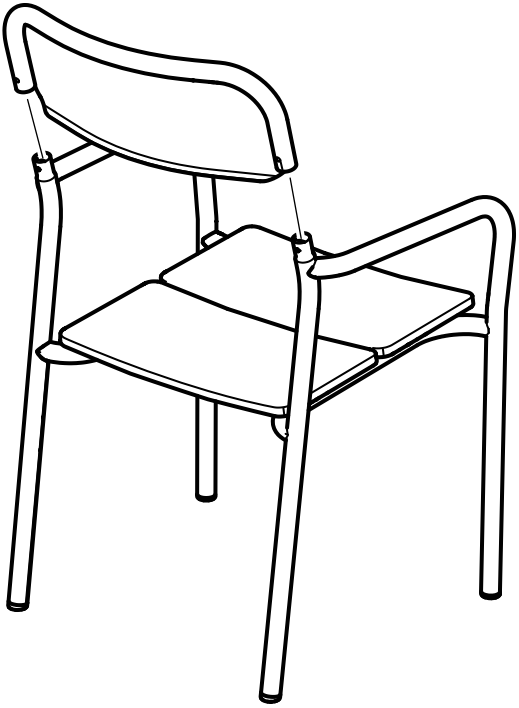

4

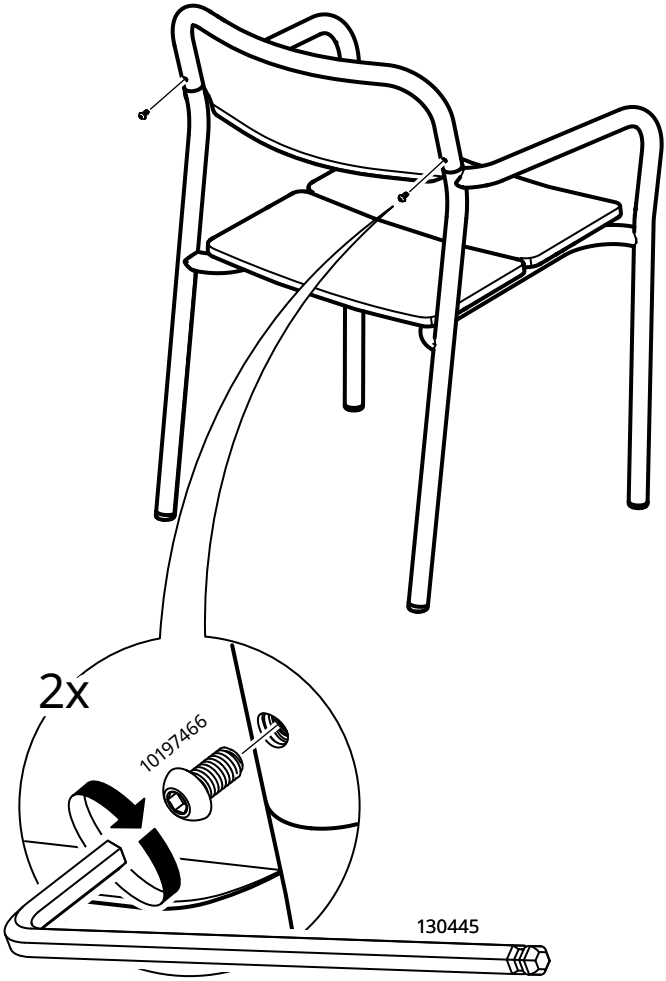

5

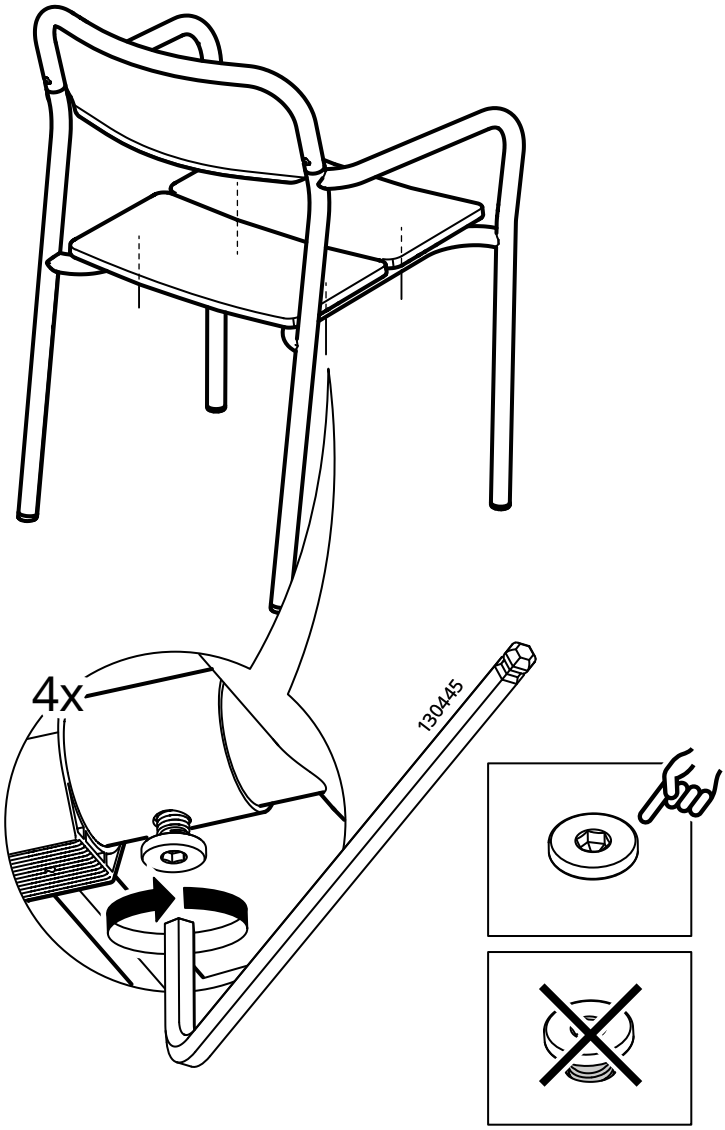

© Inter IKEA Systems B.V. 2026