KULLASKÄR

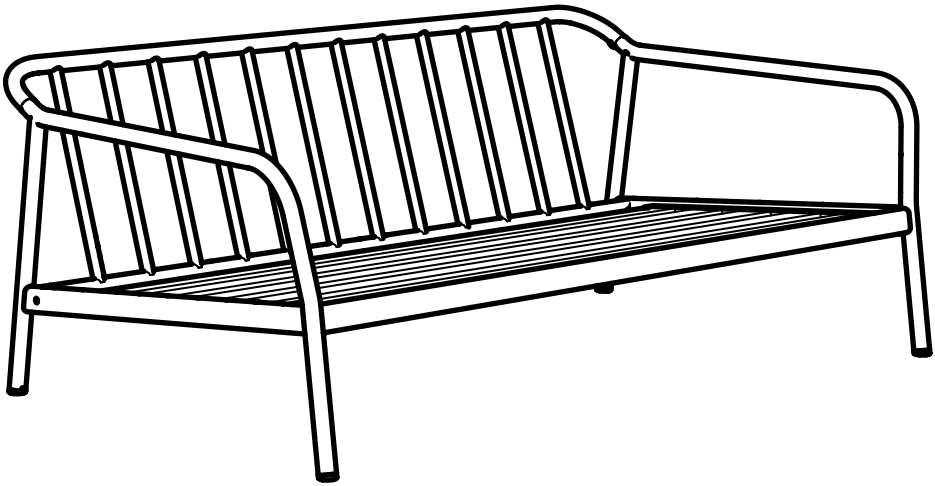

Design and Quality
IKEA of Sweden

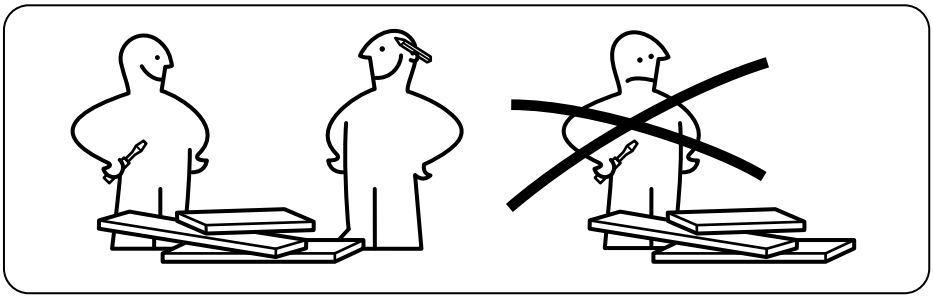

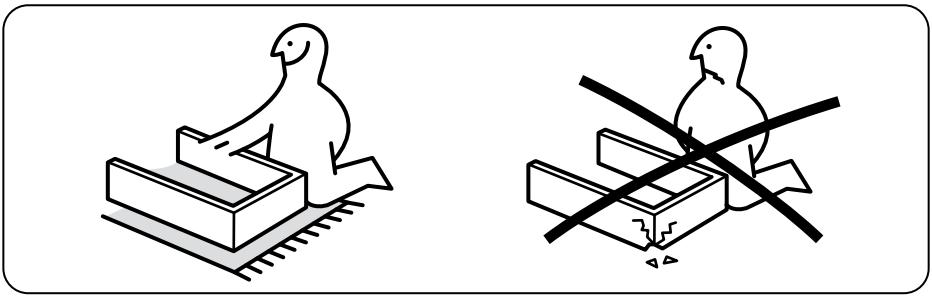

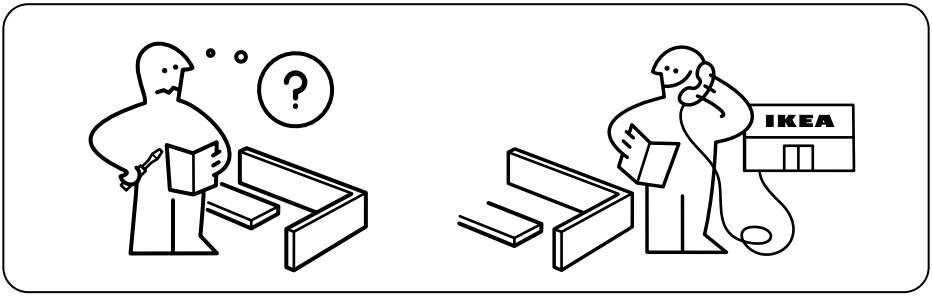
?
IKEA



1x

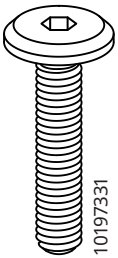

11x

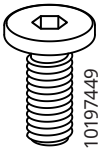

2x

1

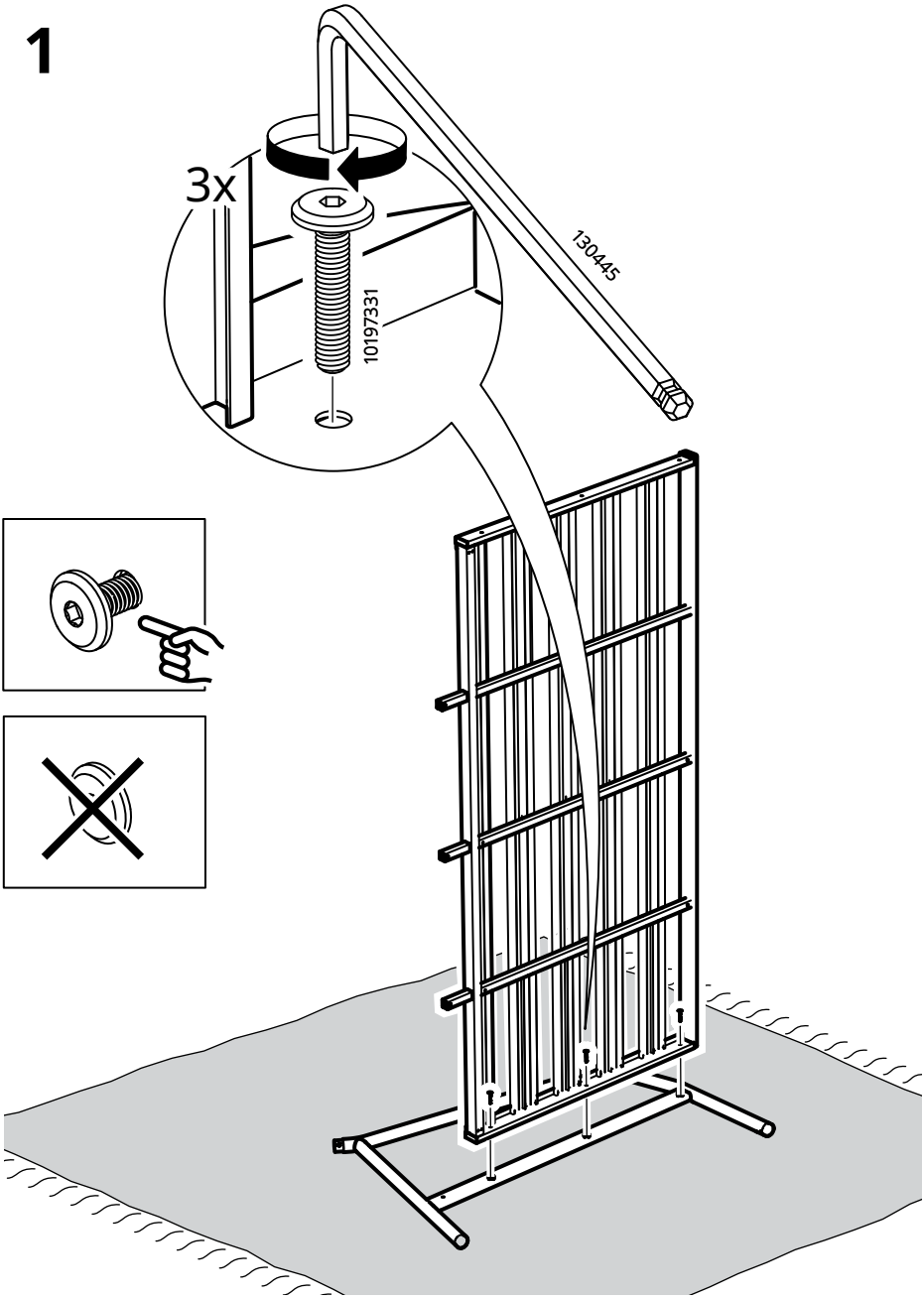

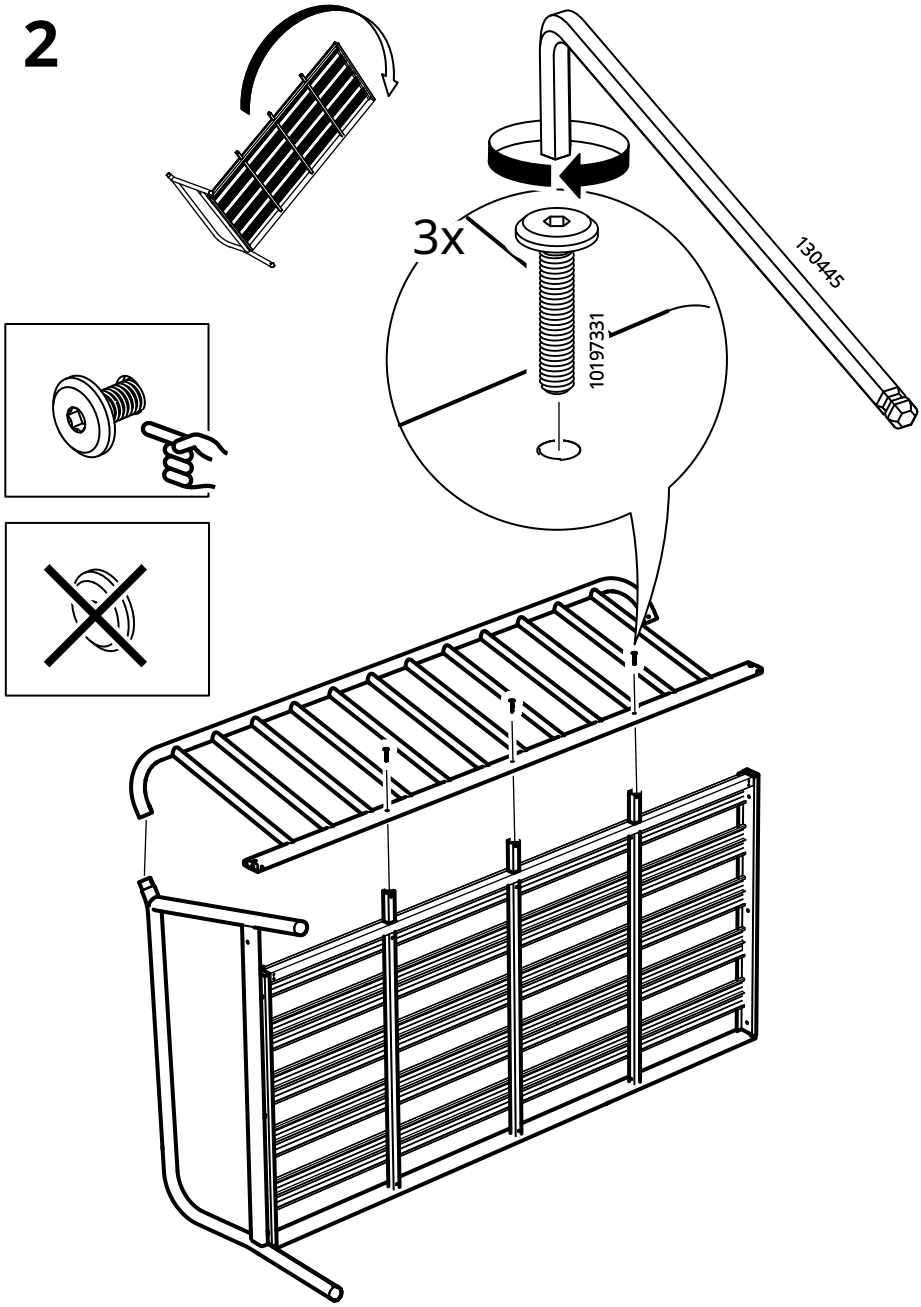
2
3x
10197331
130445

3

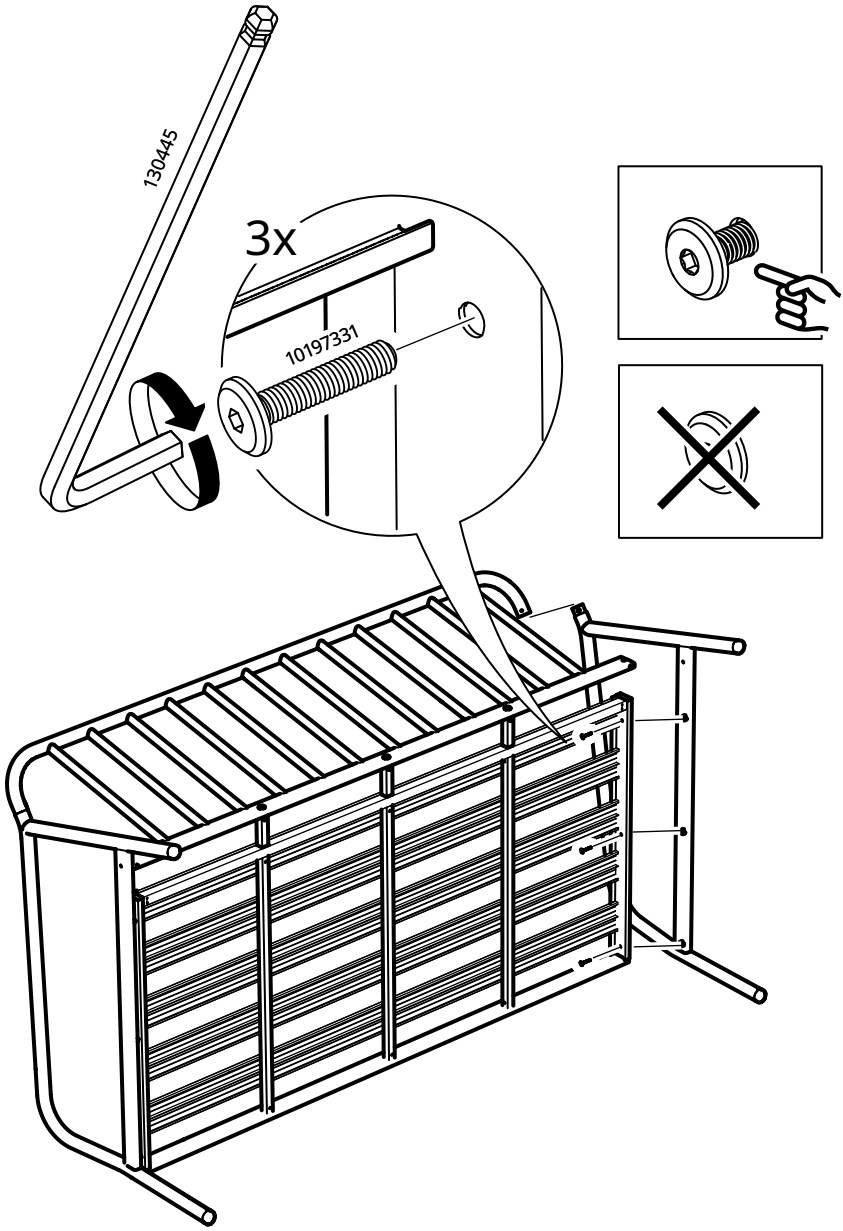

4

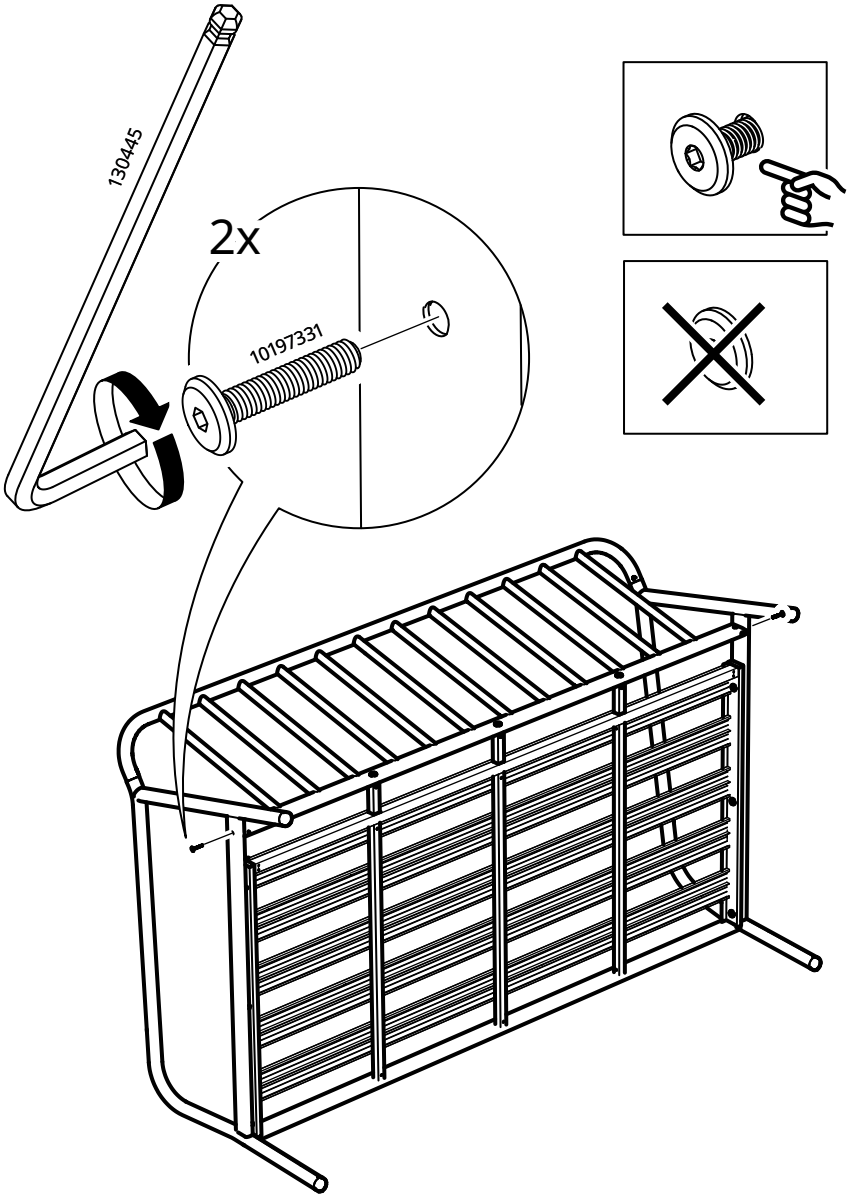

5

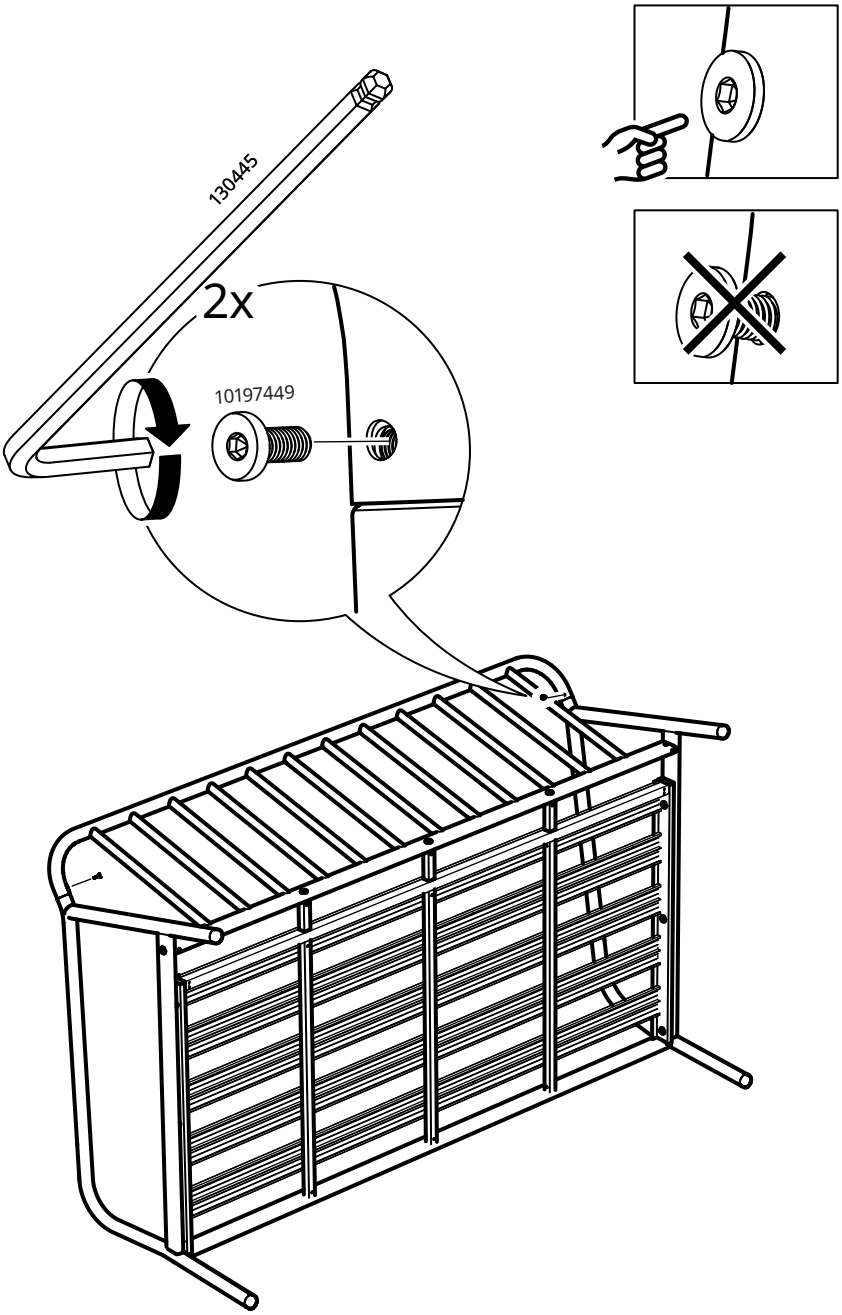

6

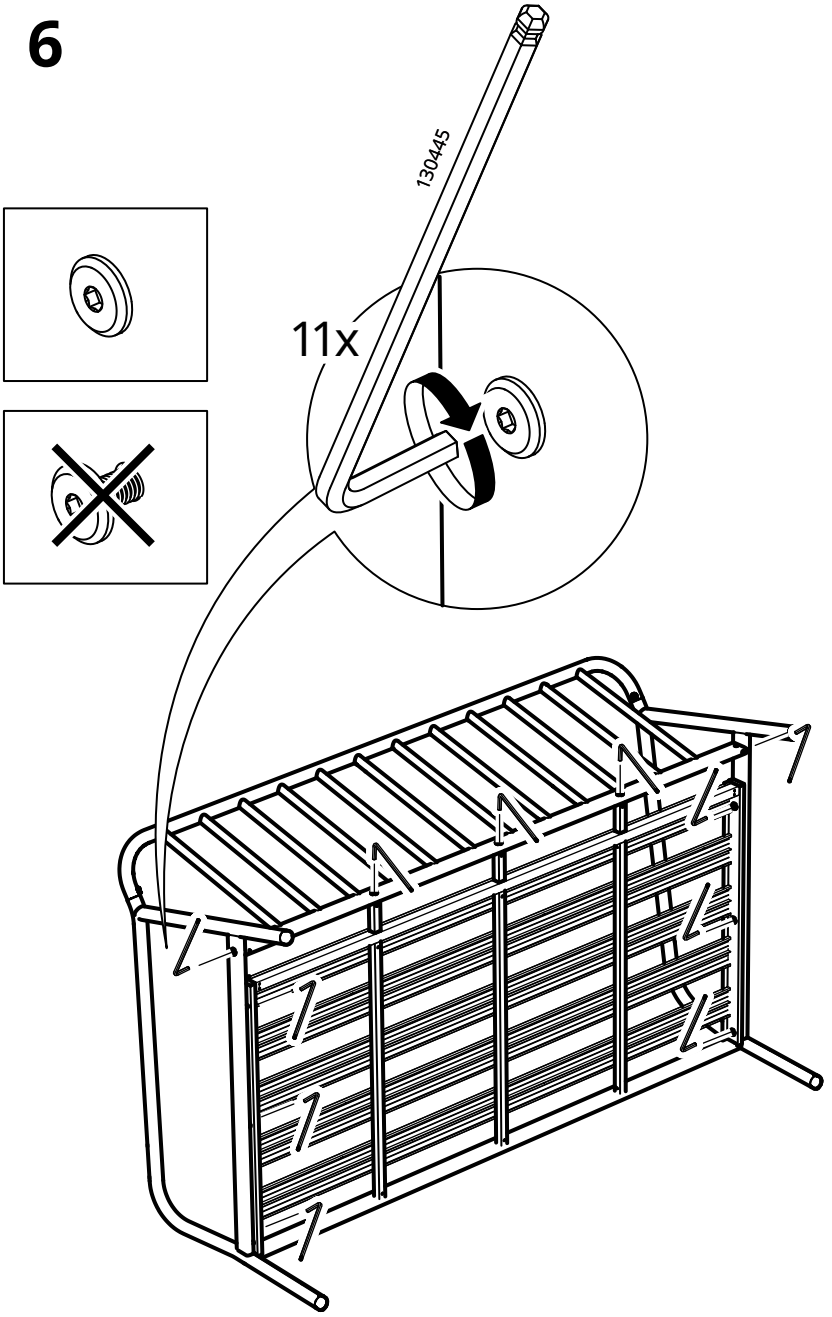

© Inter IKEA Systems B.V. 2026
2026-03-02 AA-2701854-1