HAVSTA

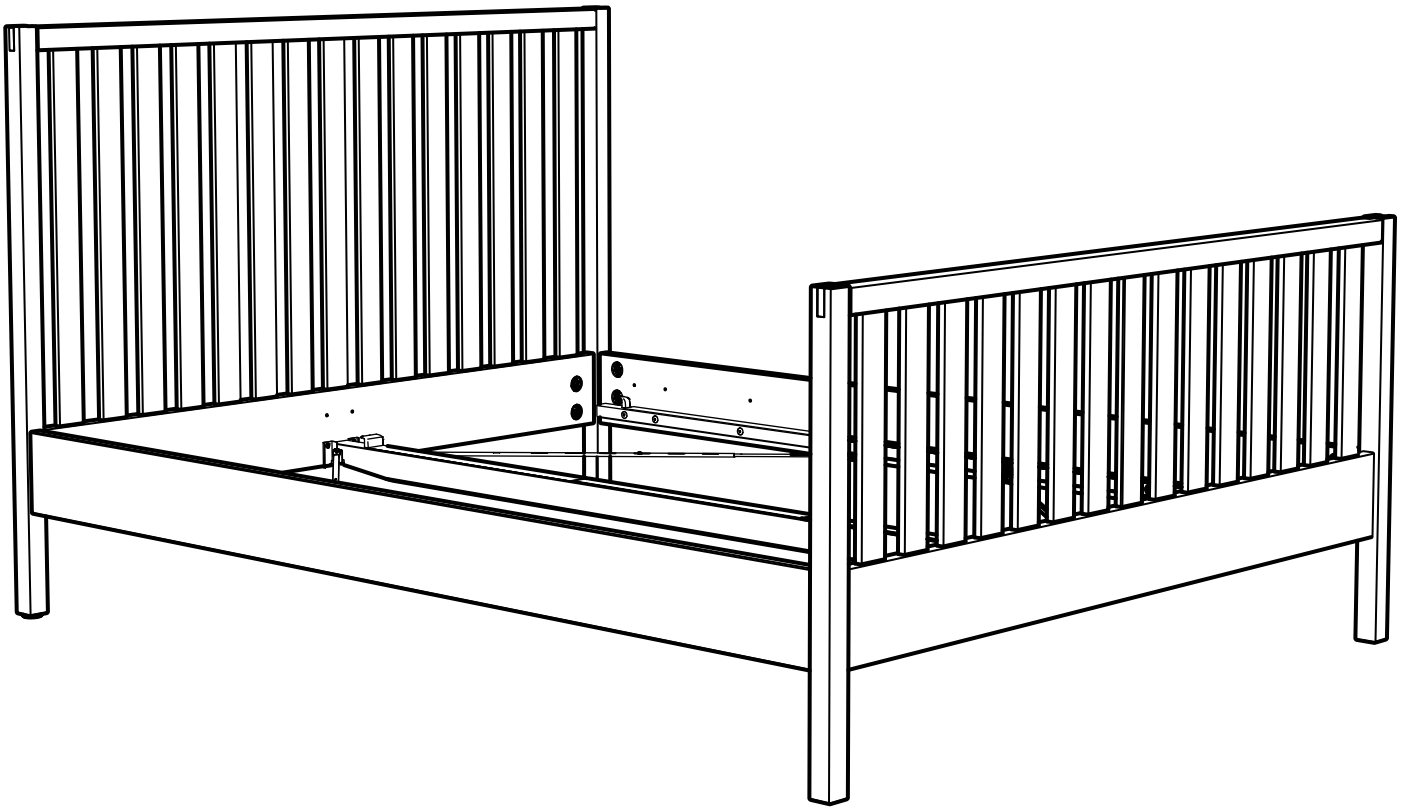

Design and Quality
IKEA of Sweden

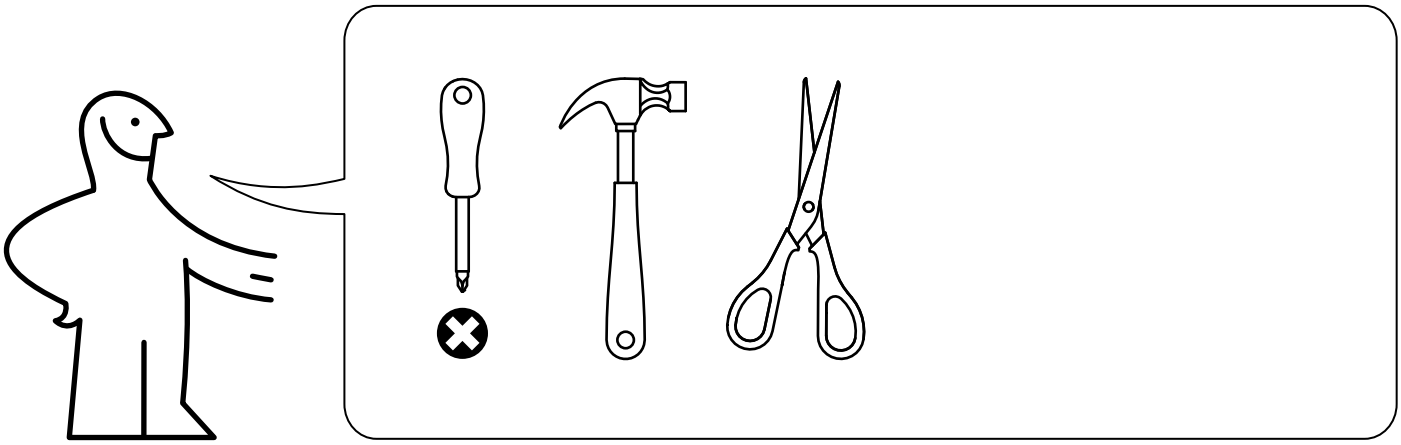

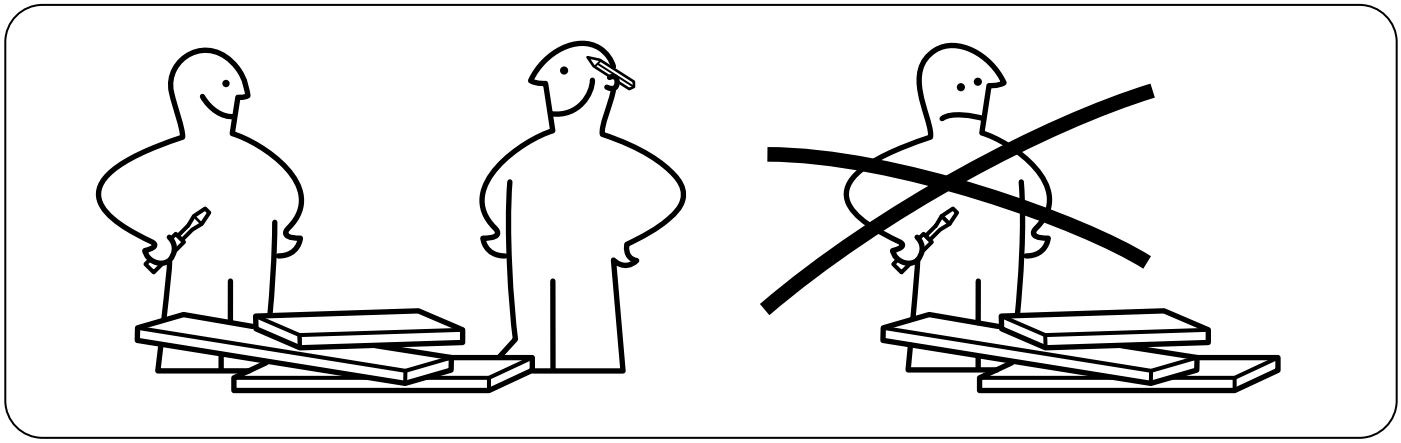

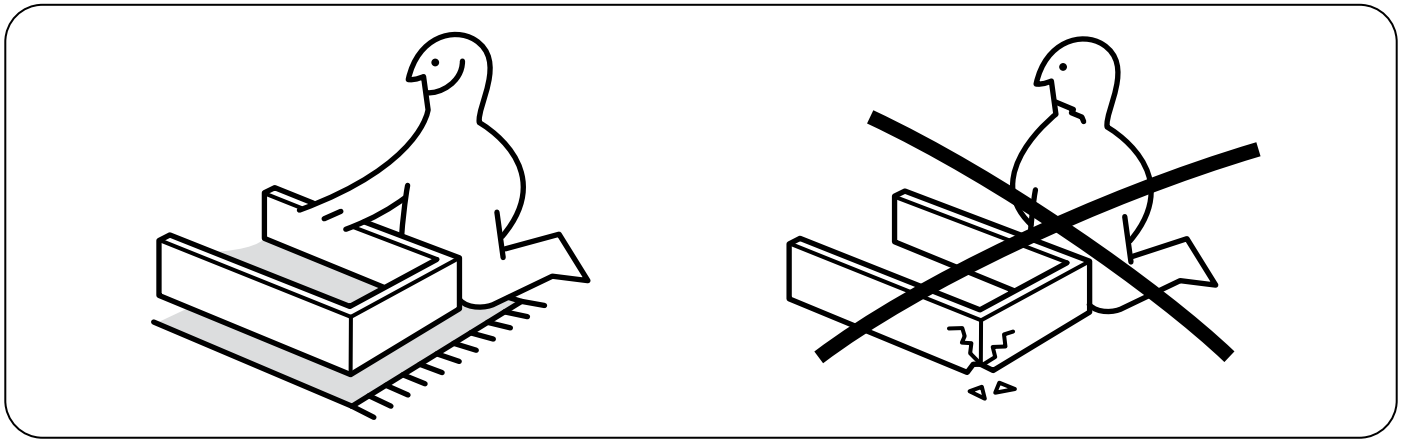

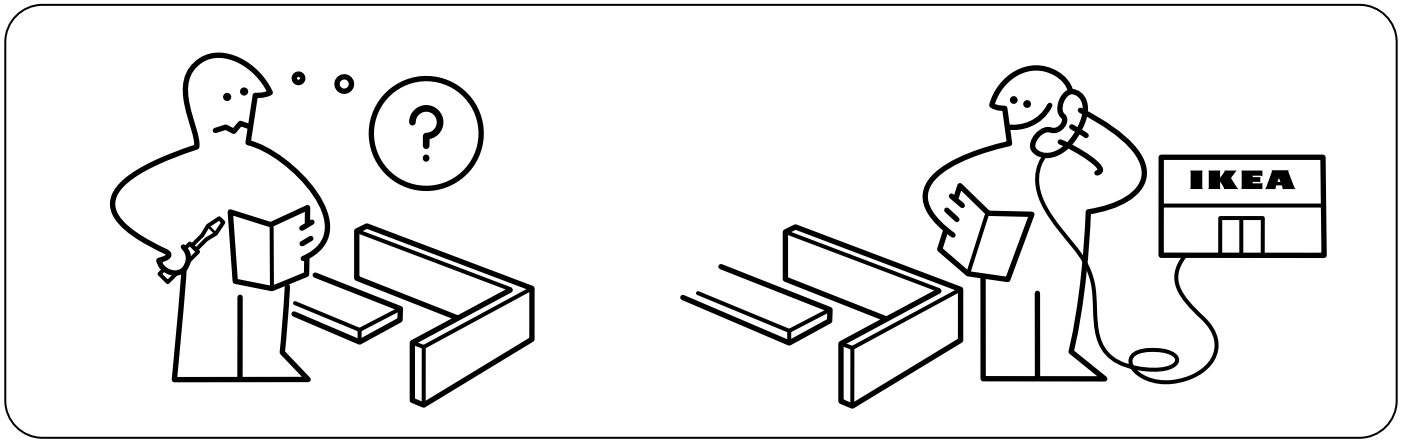
?
IKEA

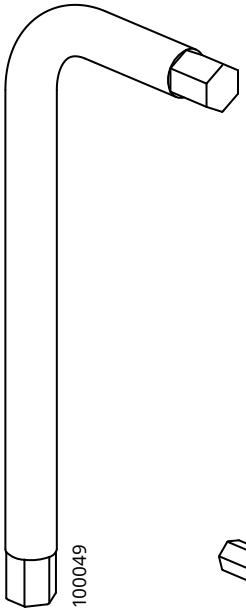

1x

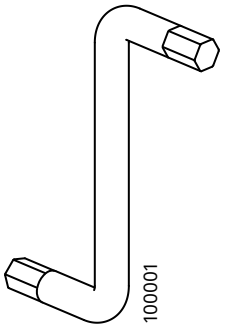

1x

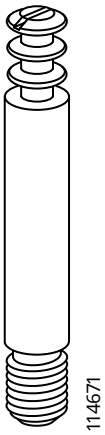

12x

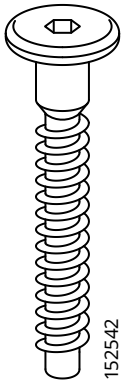

16x

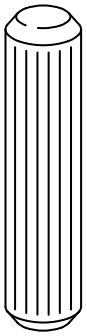

12x



2x

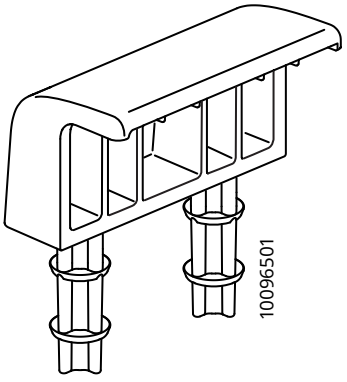

2x

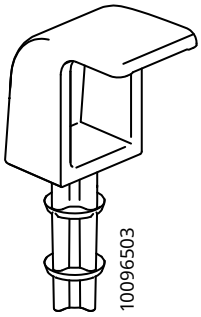

4x

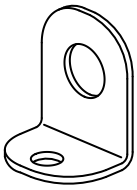

4x

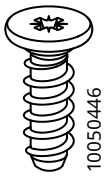

4x



12x

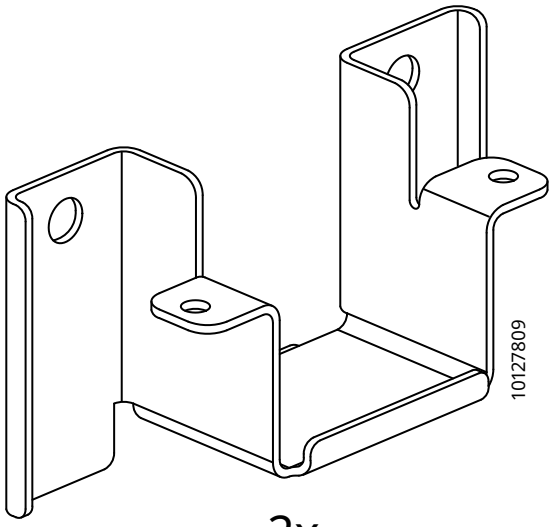

2x

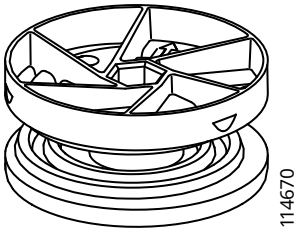

12x

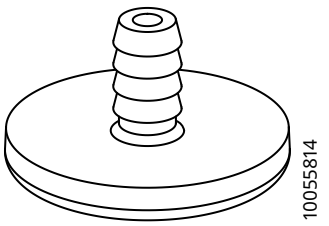

4x

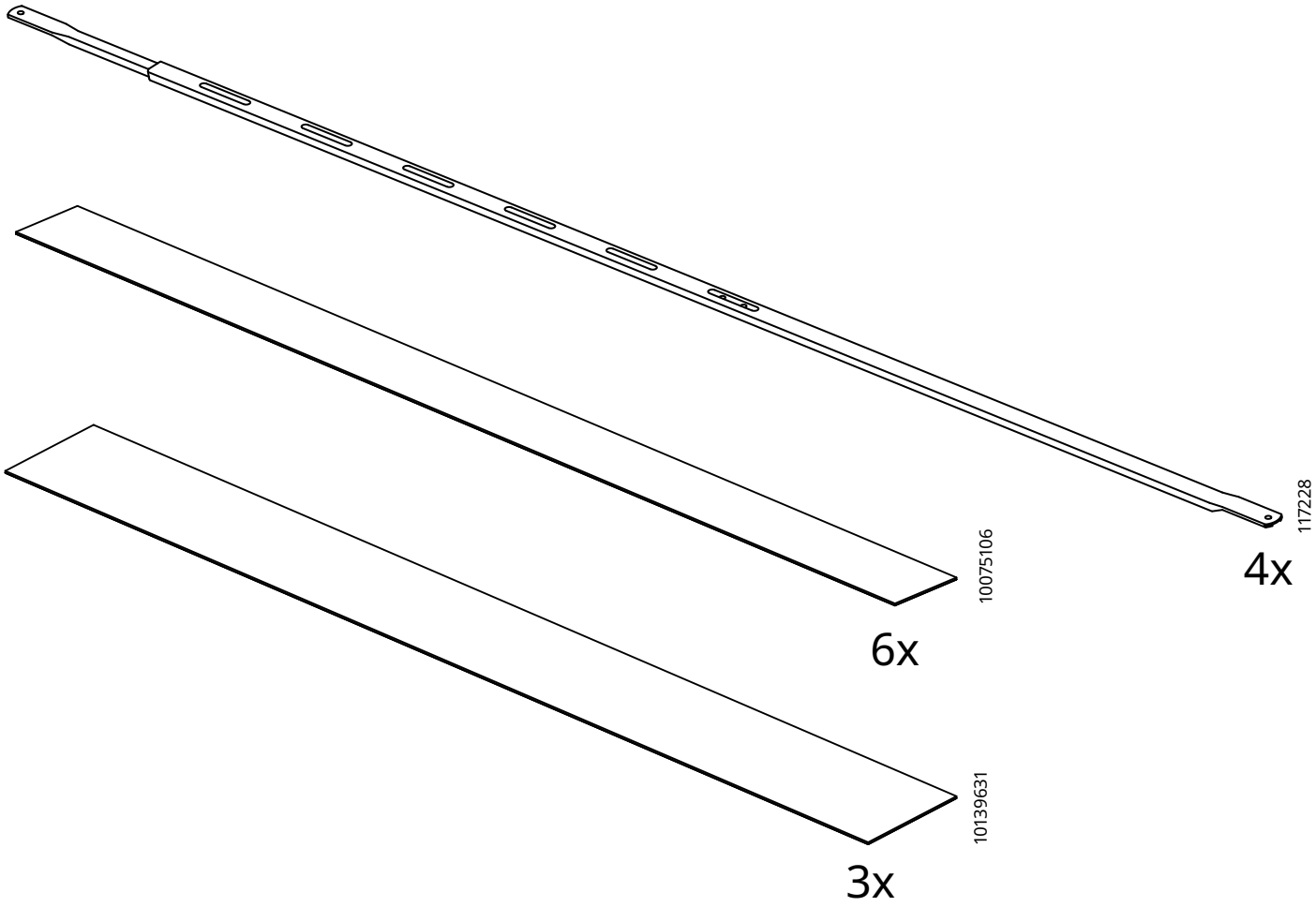
117228
4x
10075106
6x
10139631
3x

1

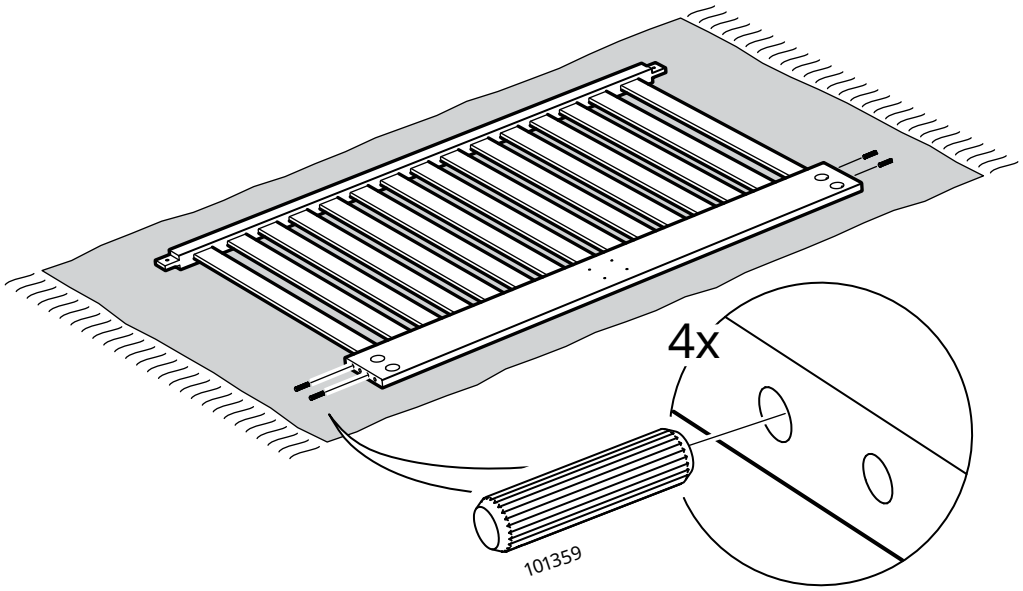

2

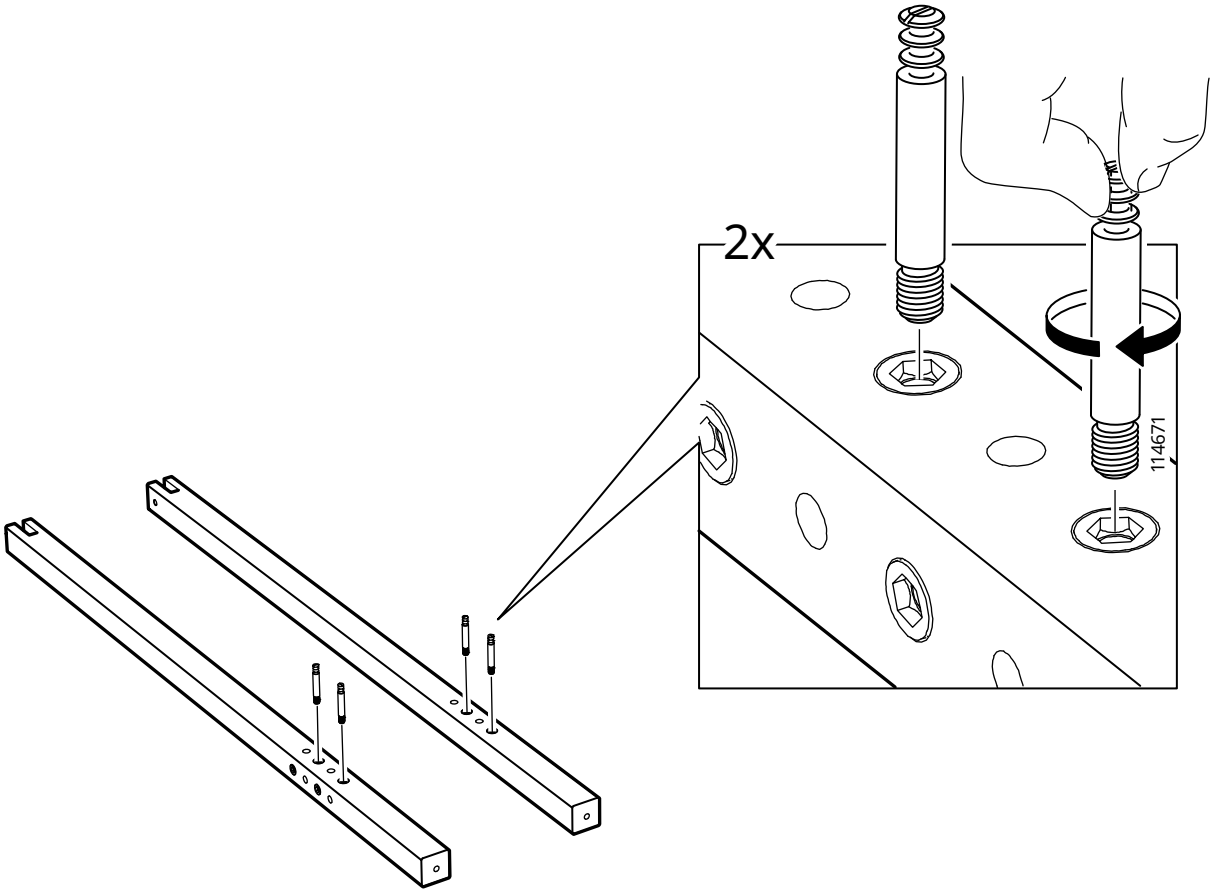

3

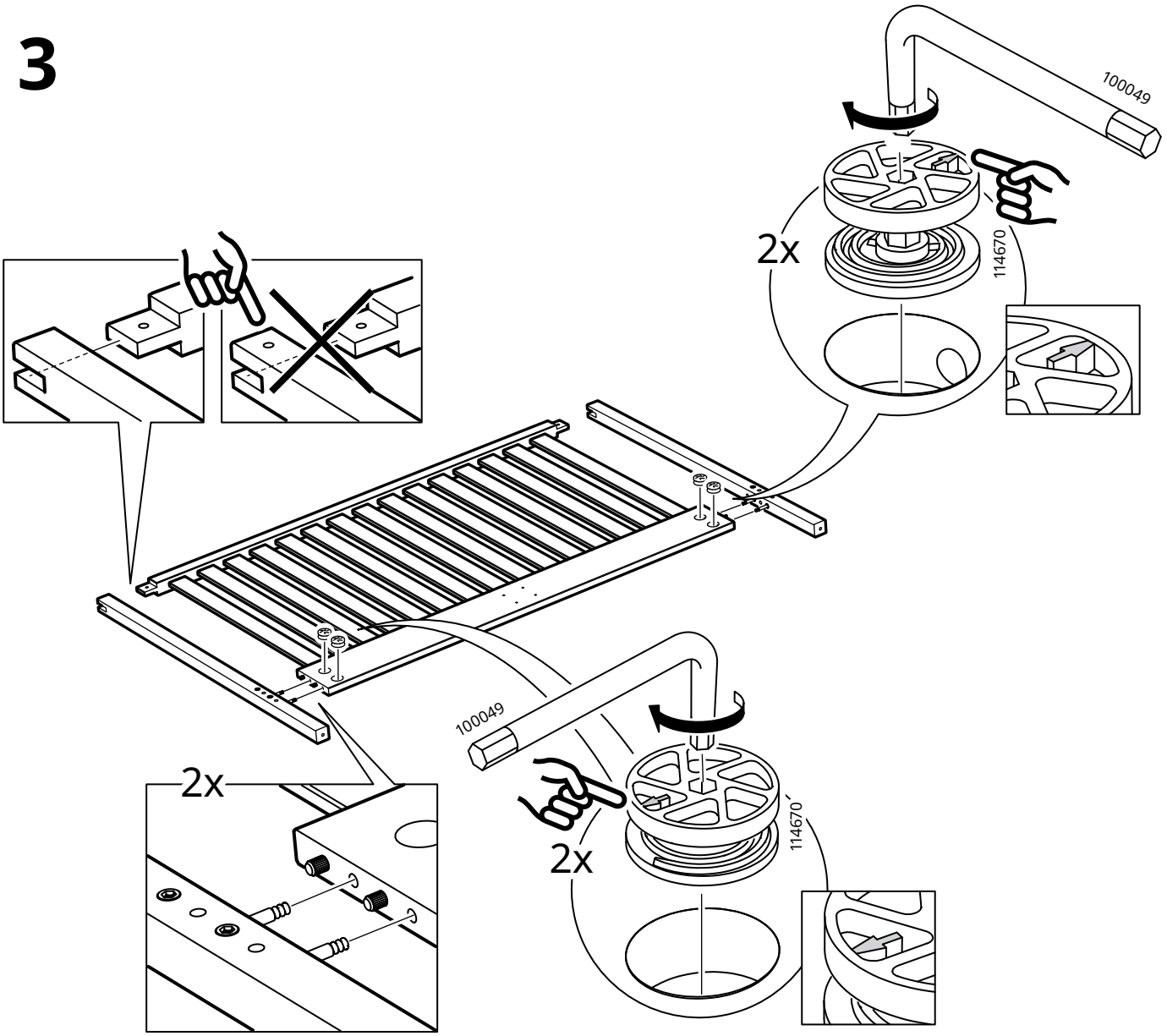

4

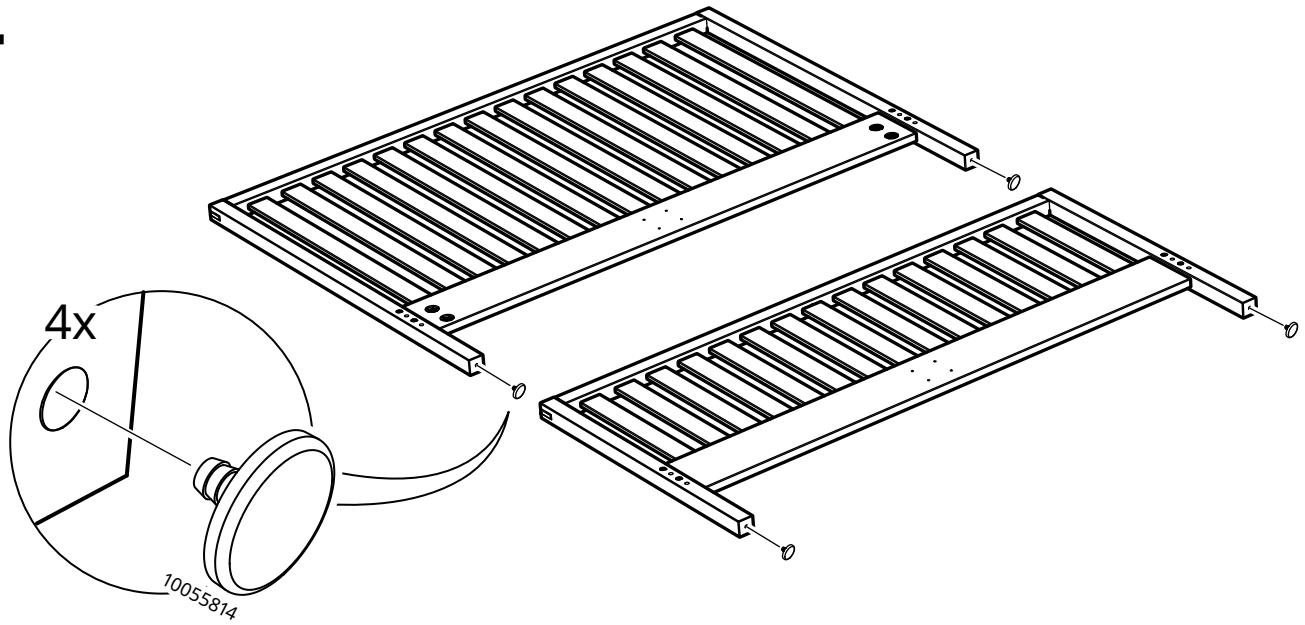

5

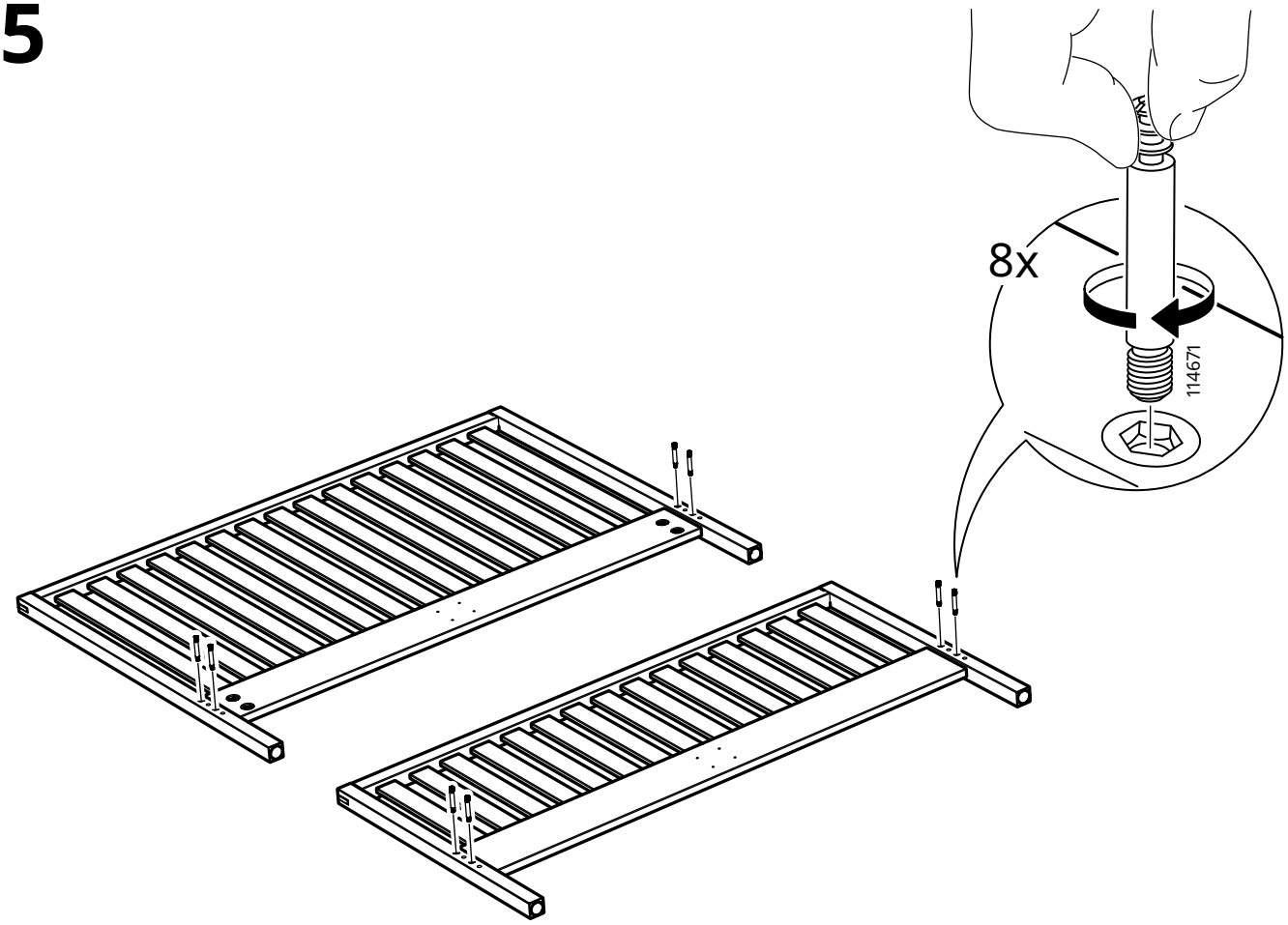

6

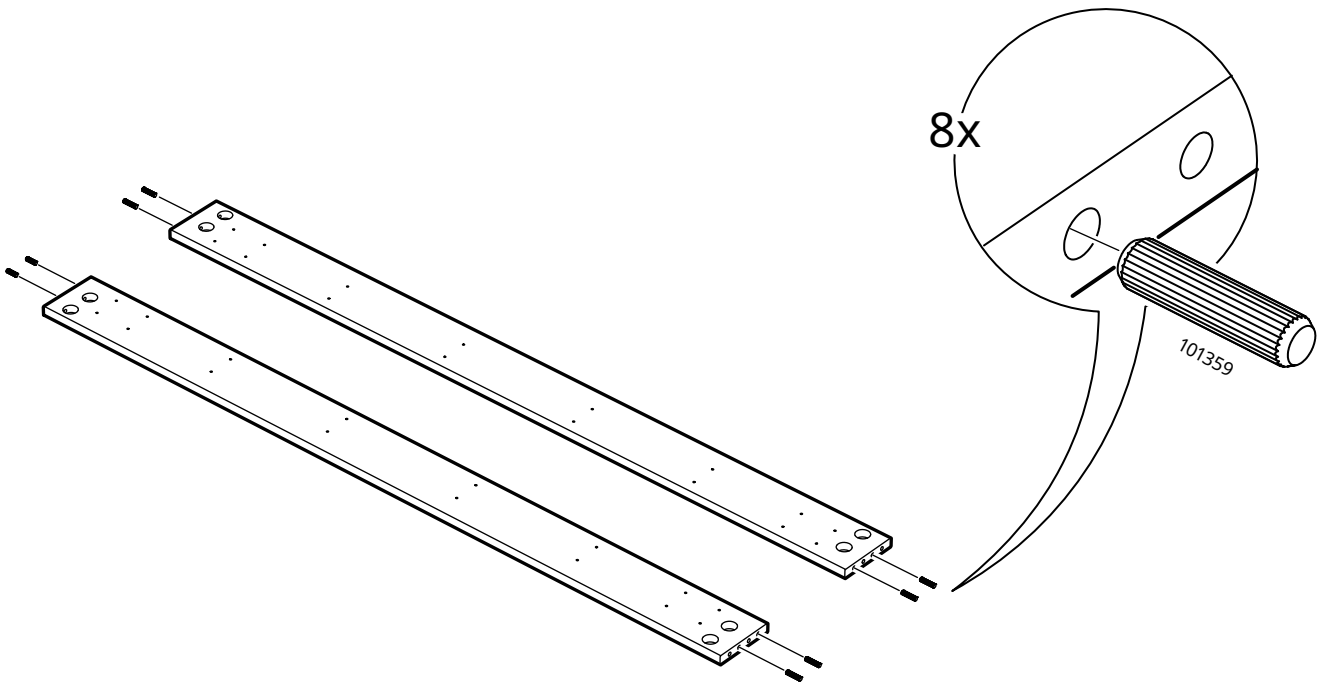

7

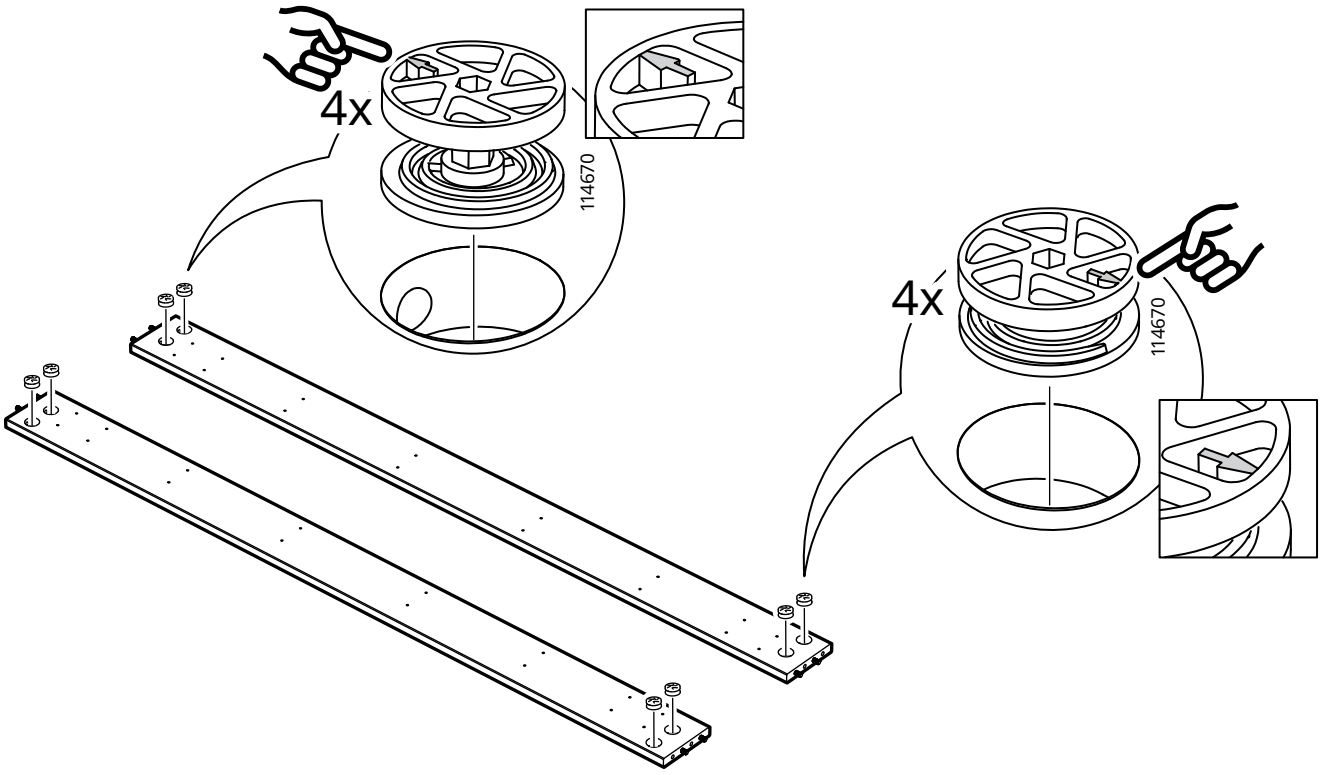

8

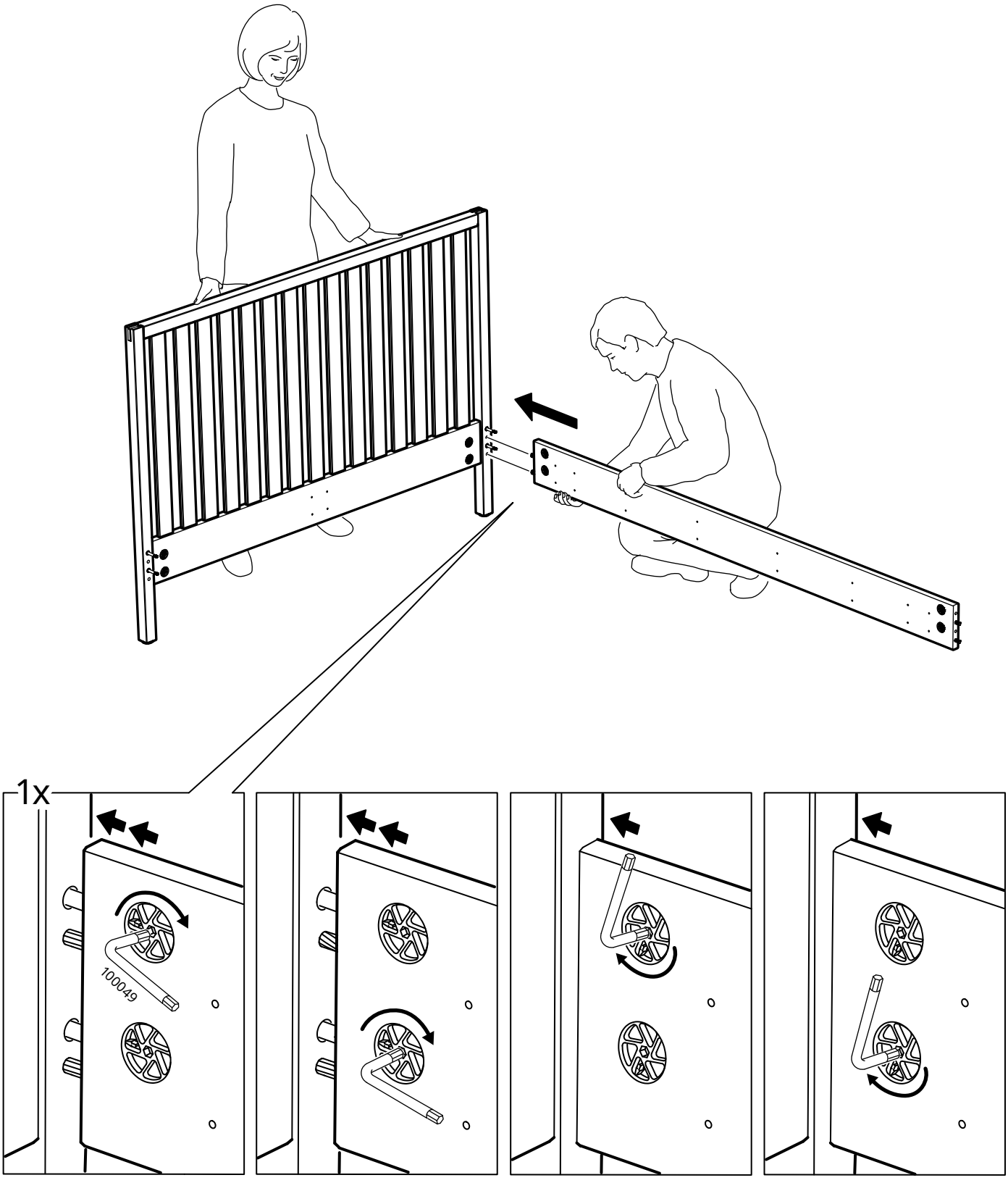

9

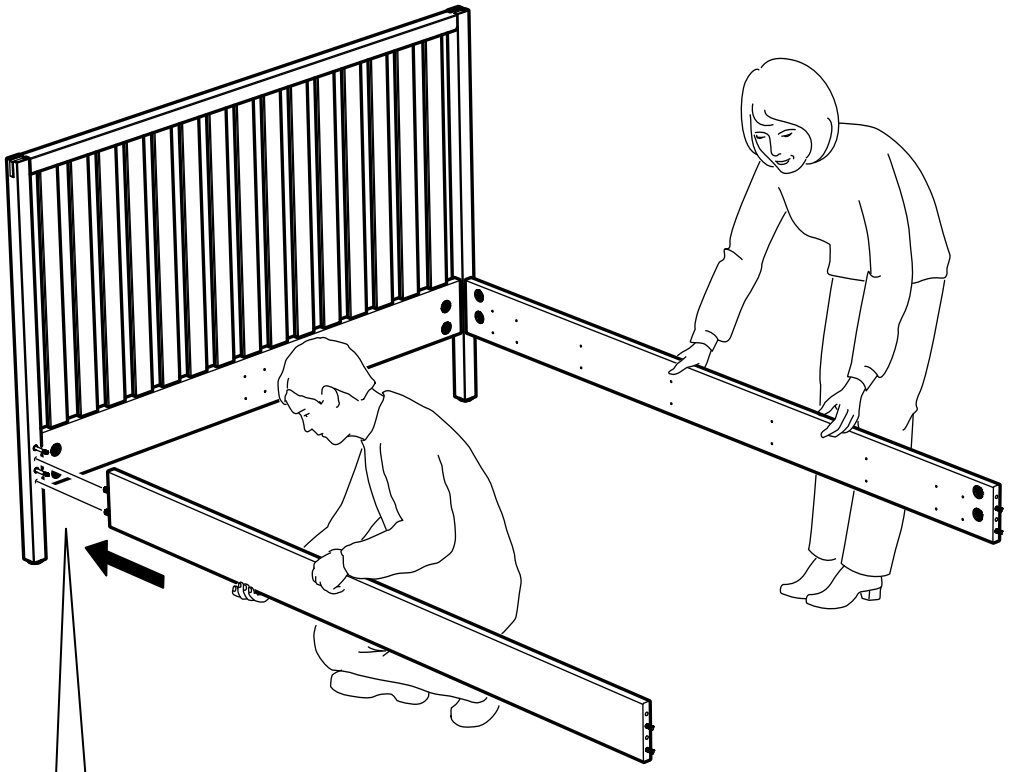

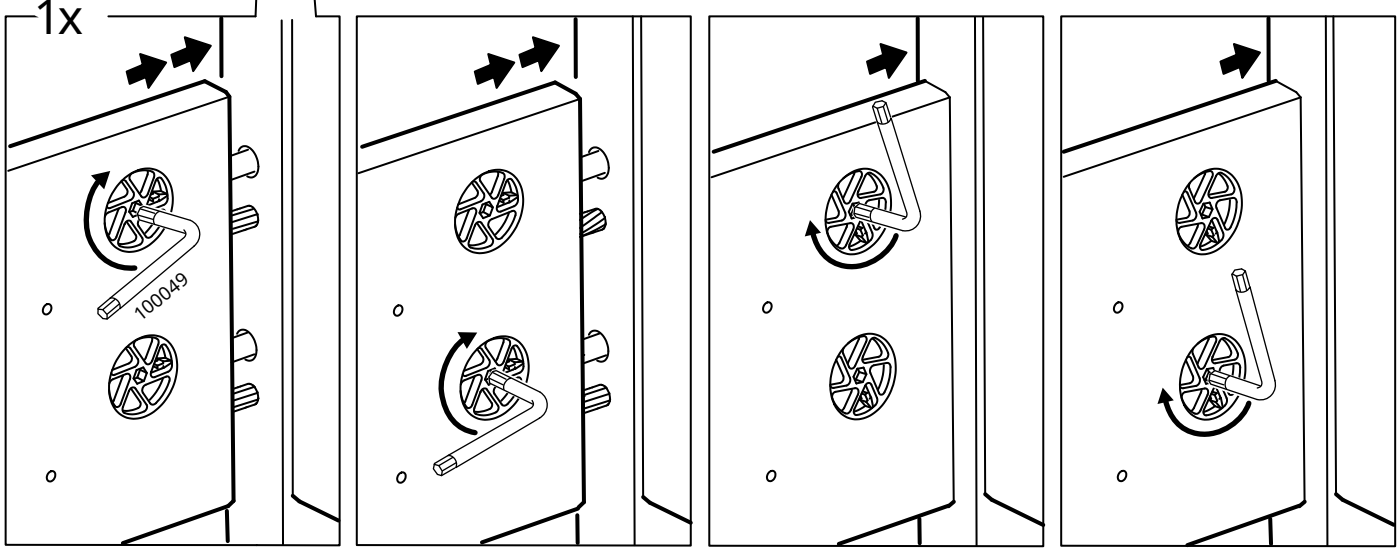

10

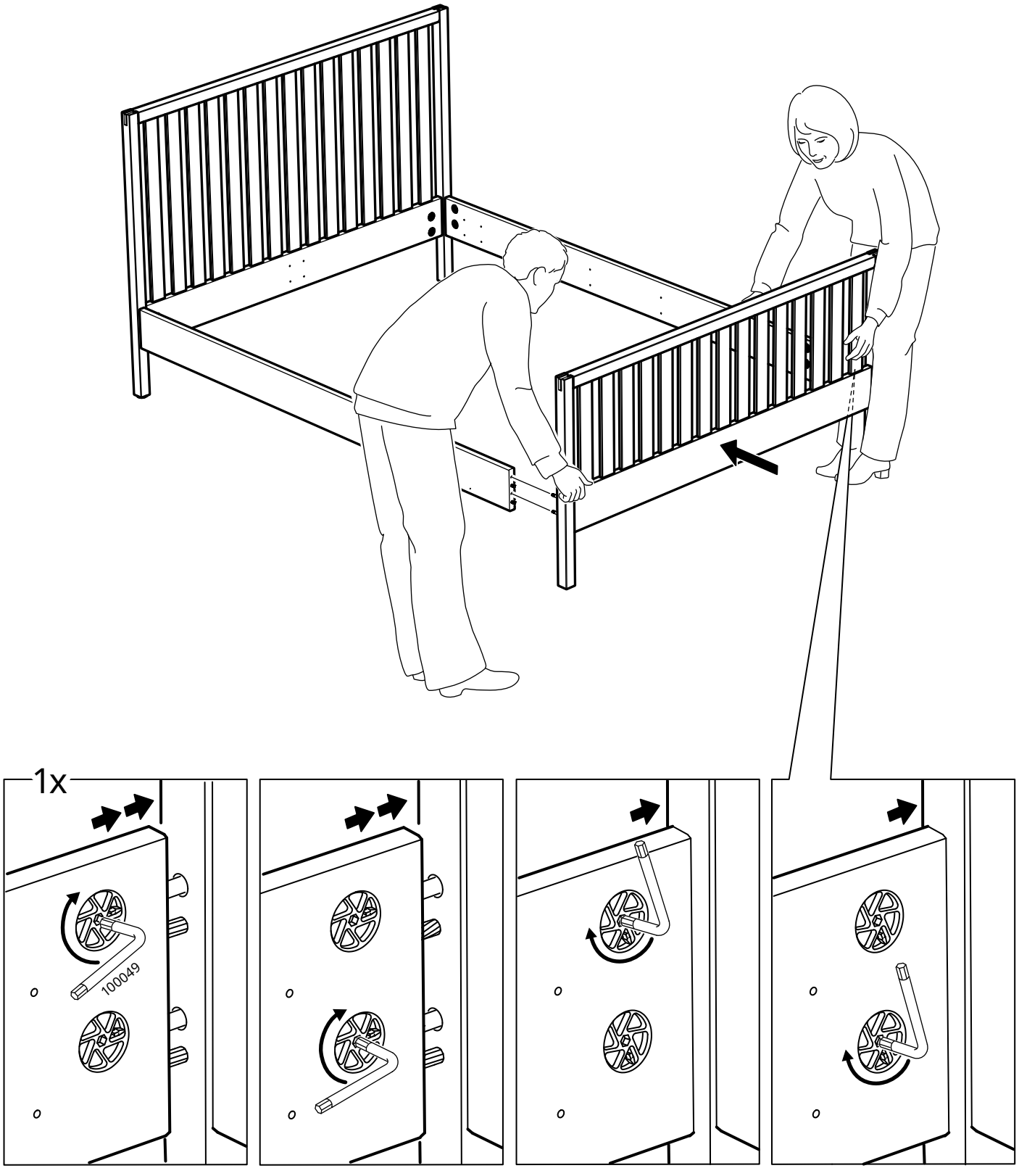

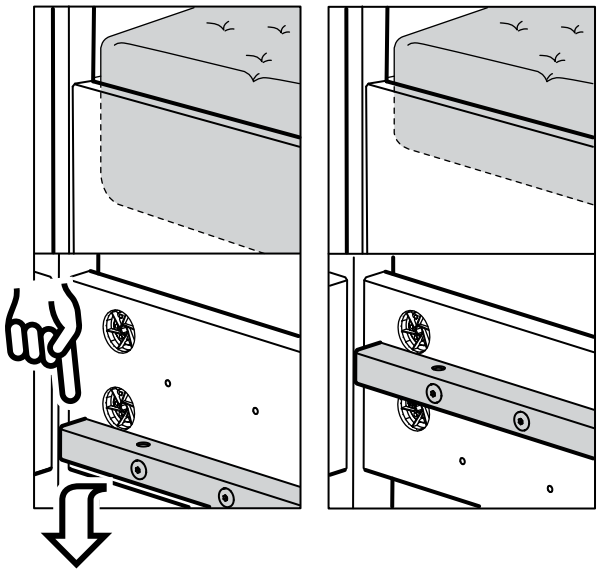

11

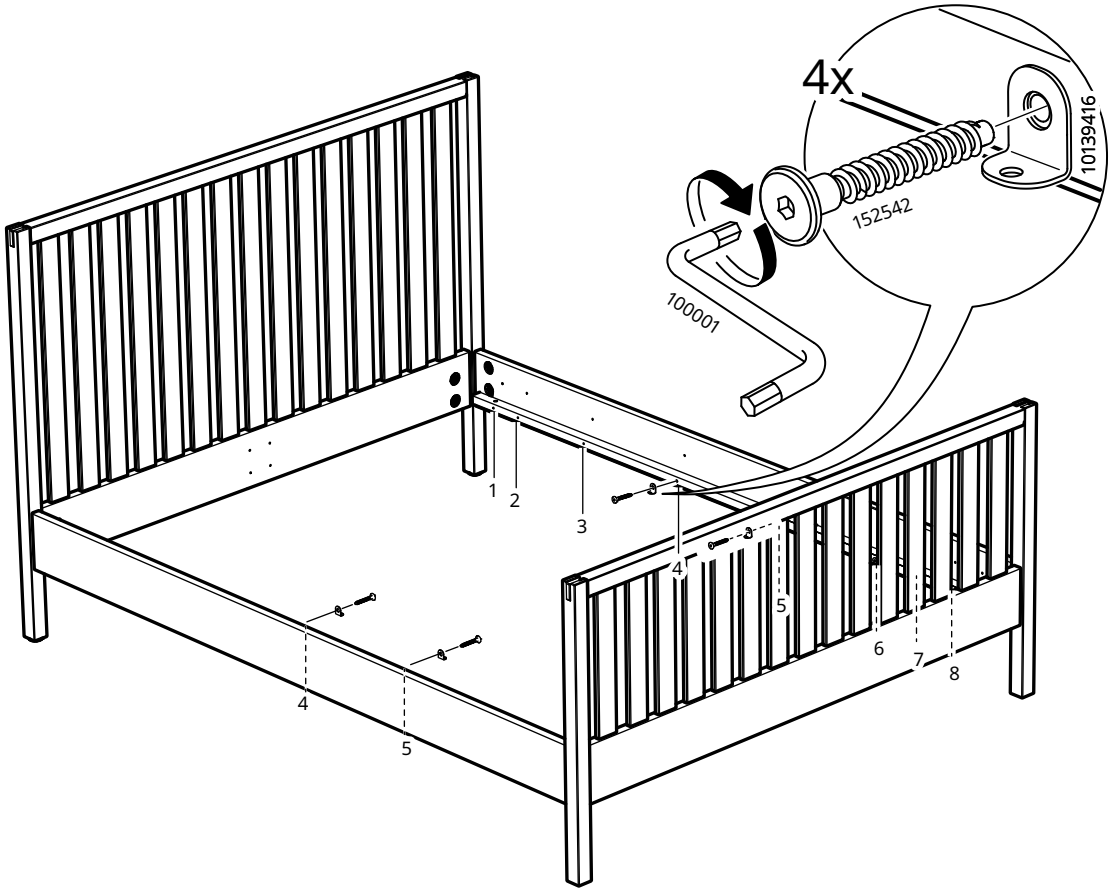

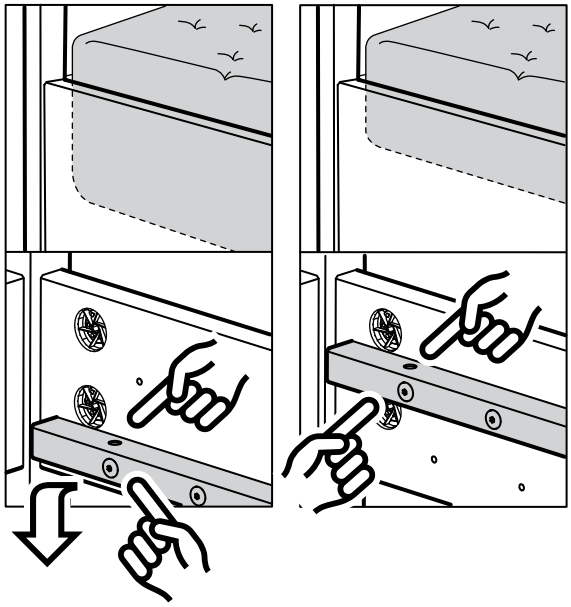

12

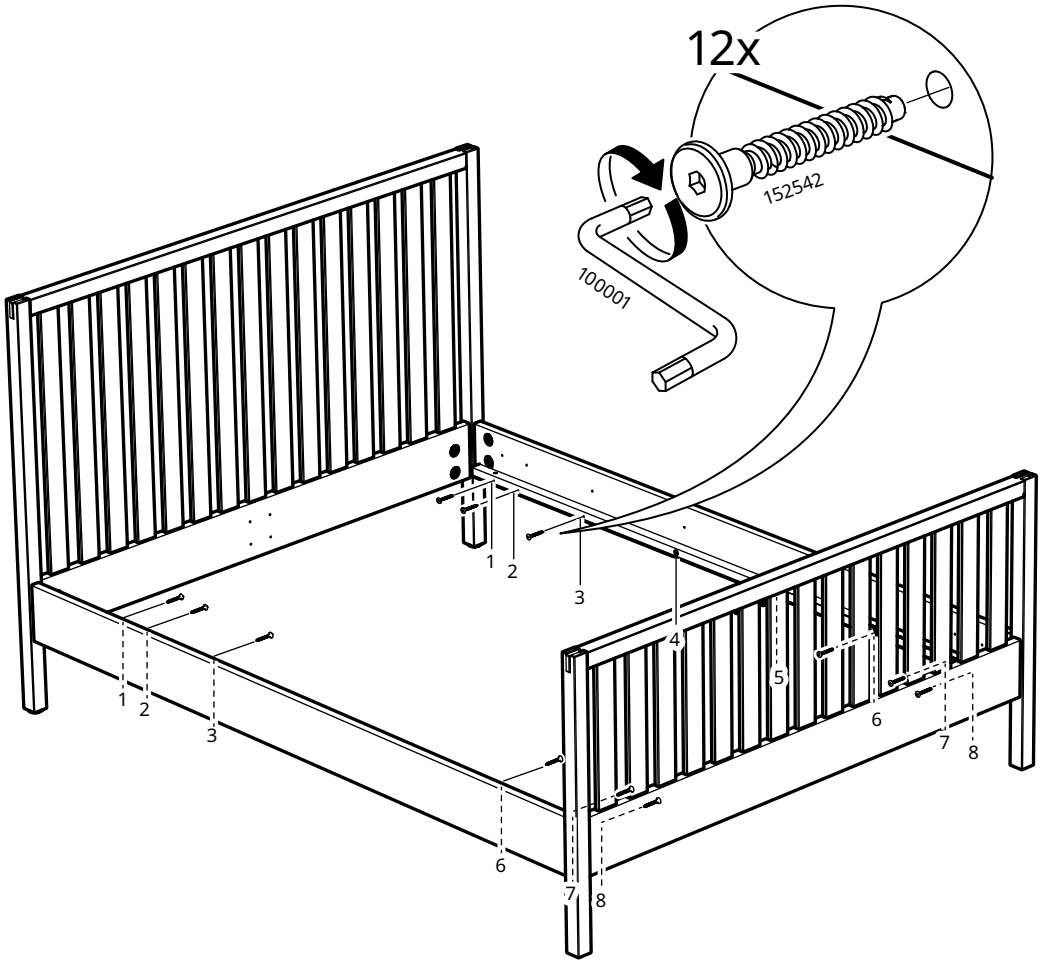

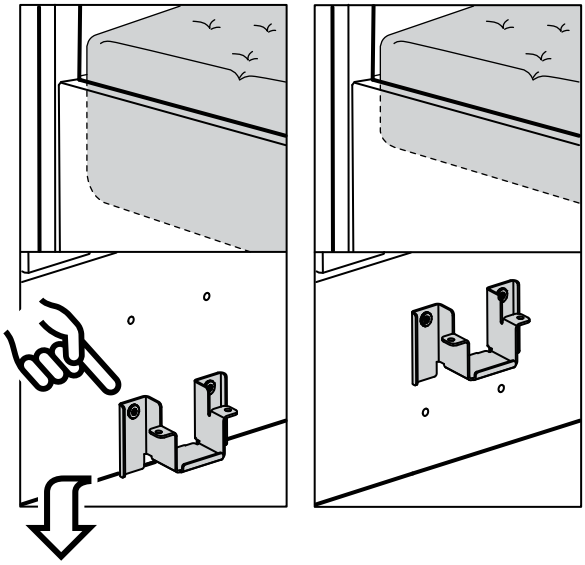

13

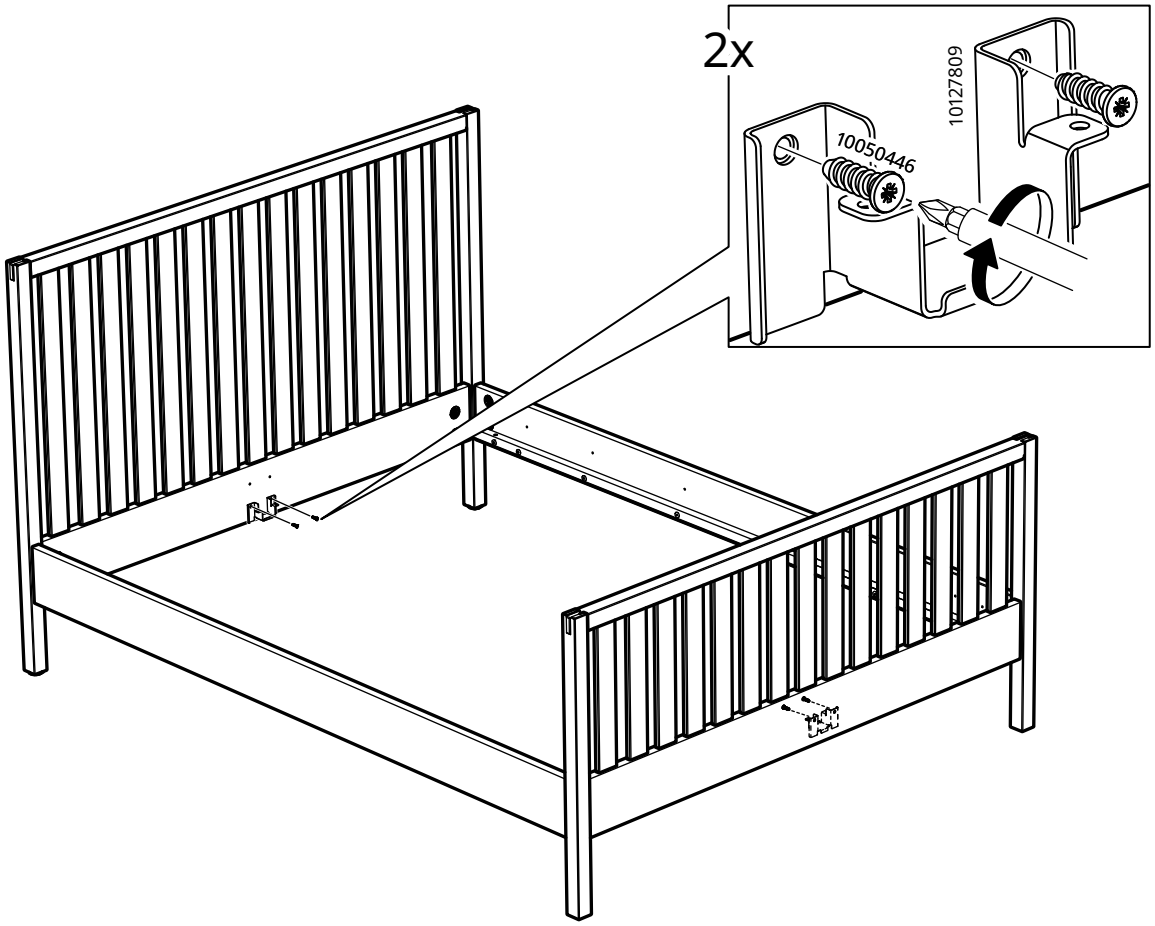

14

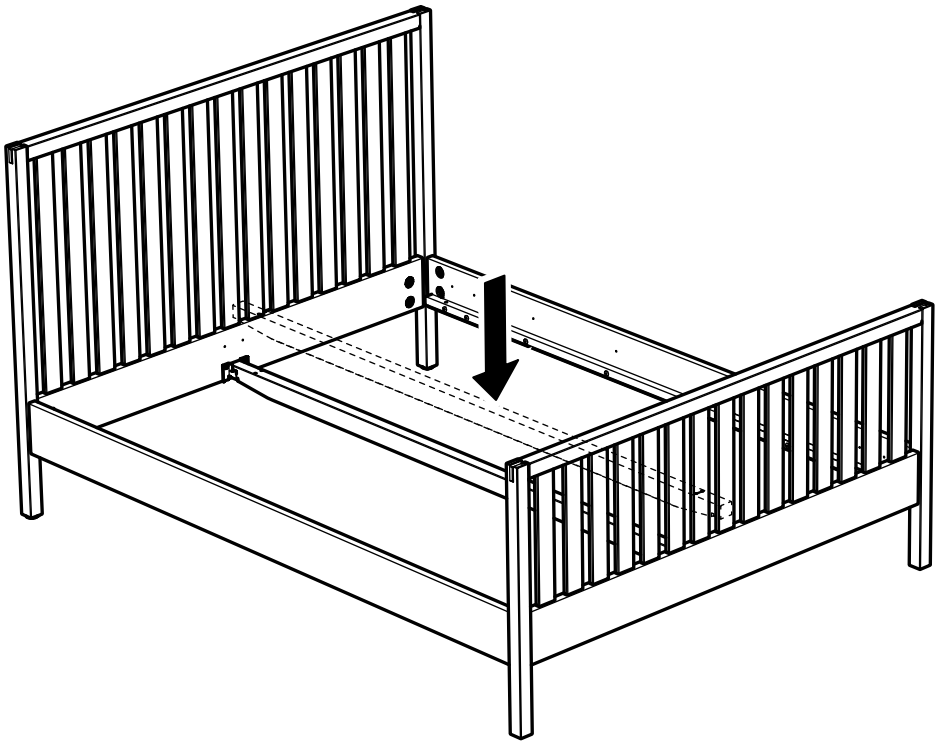

15

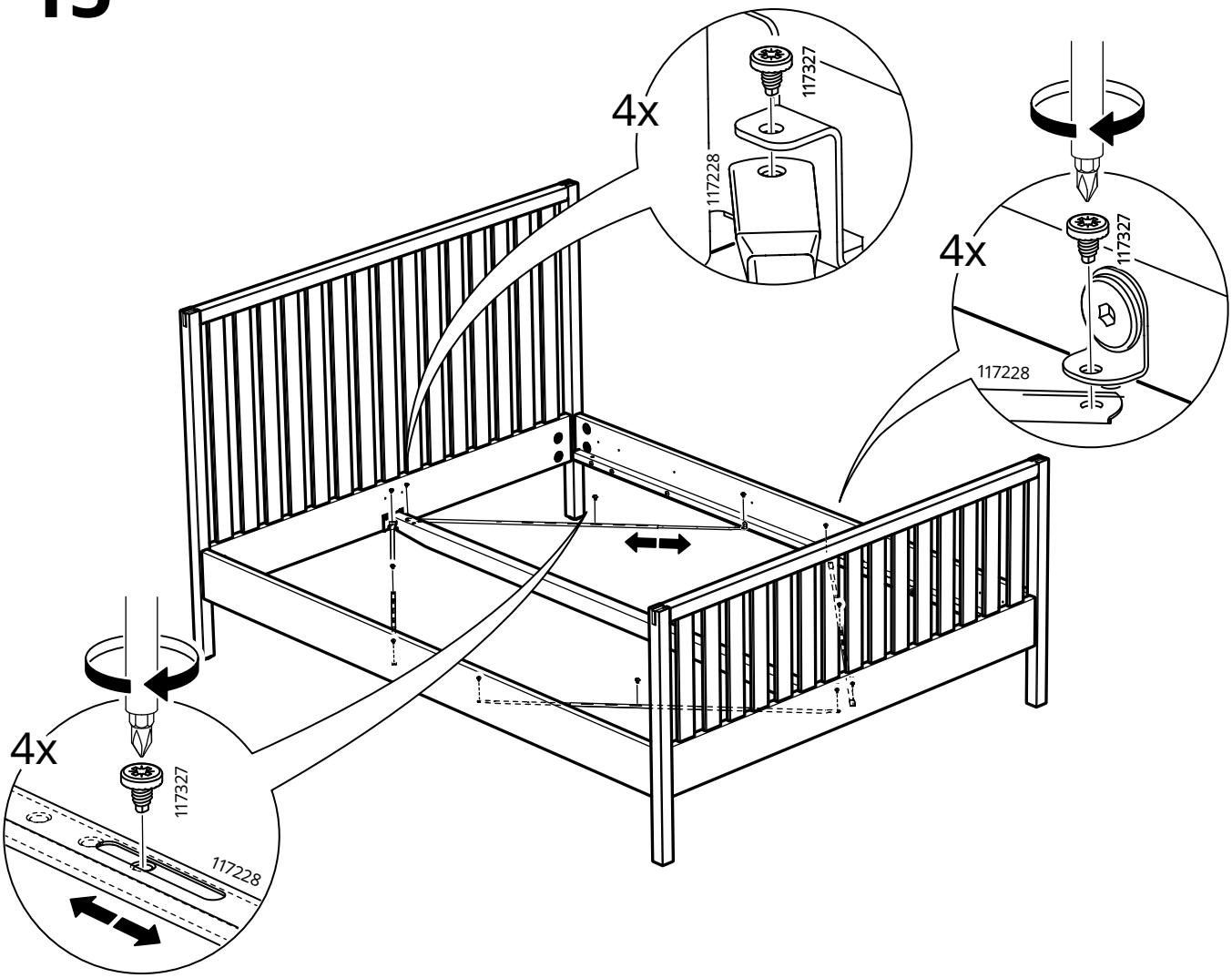

16

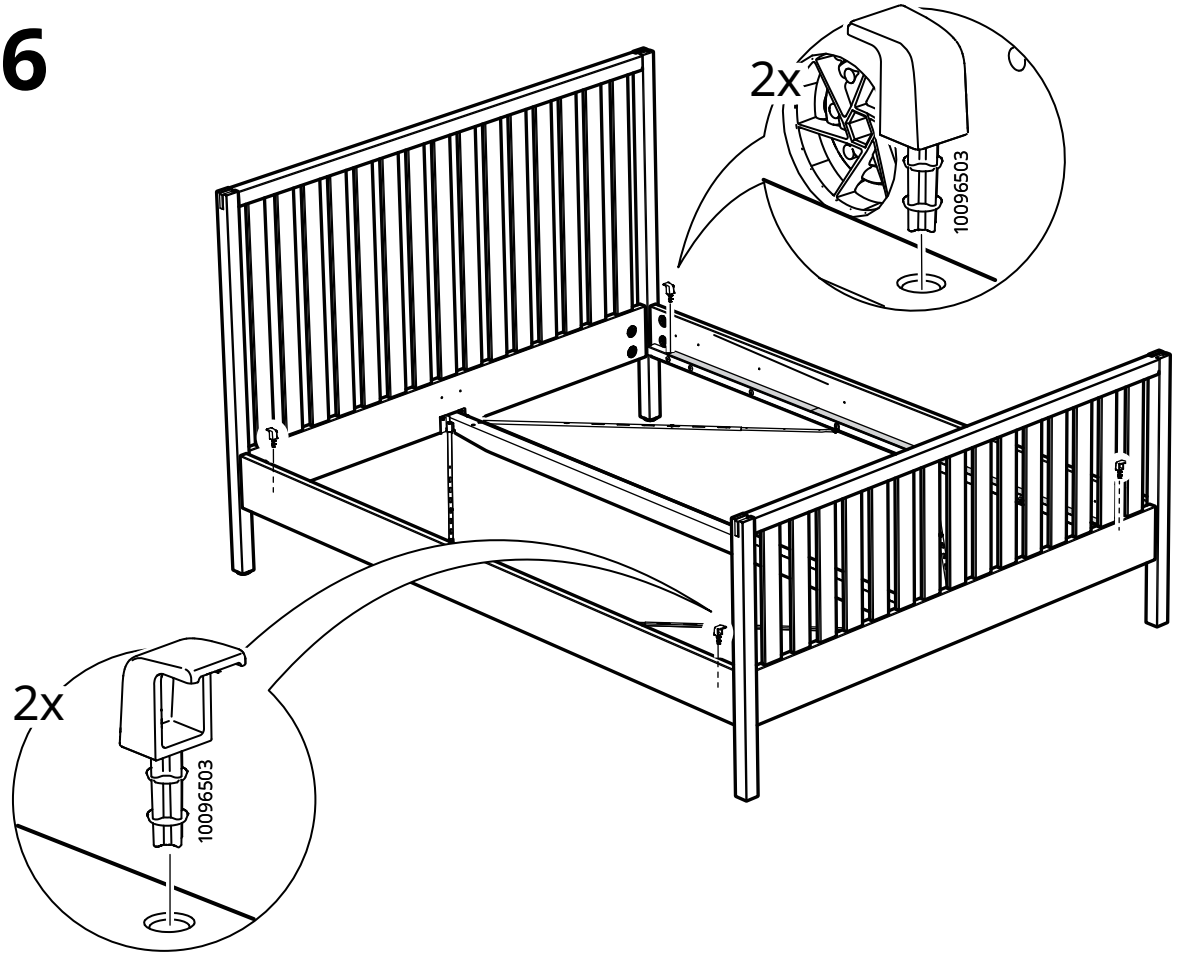

17

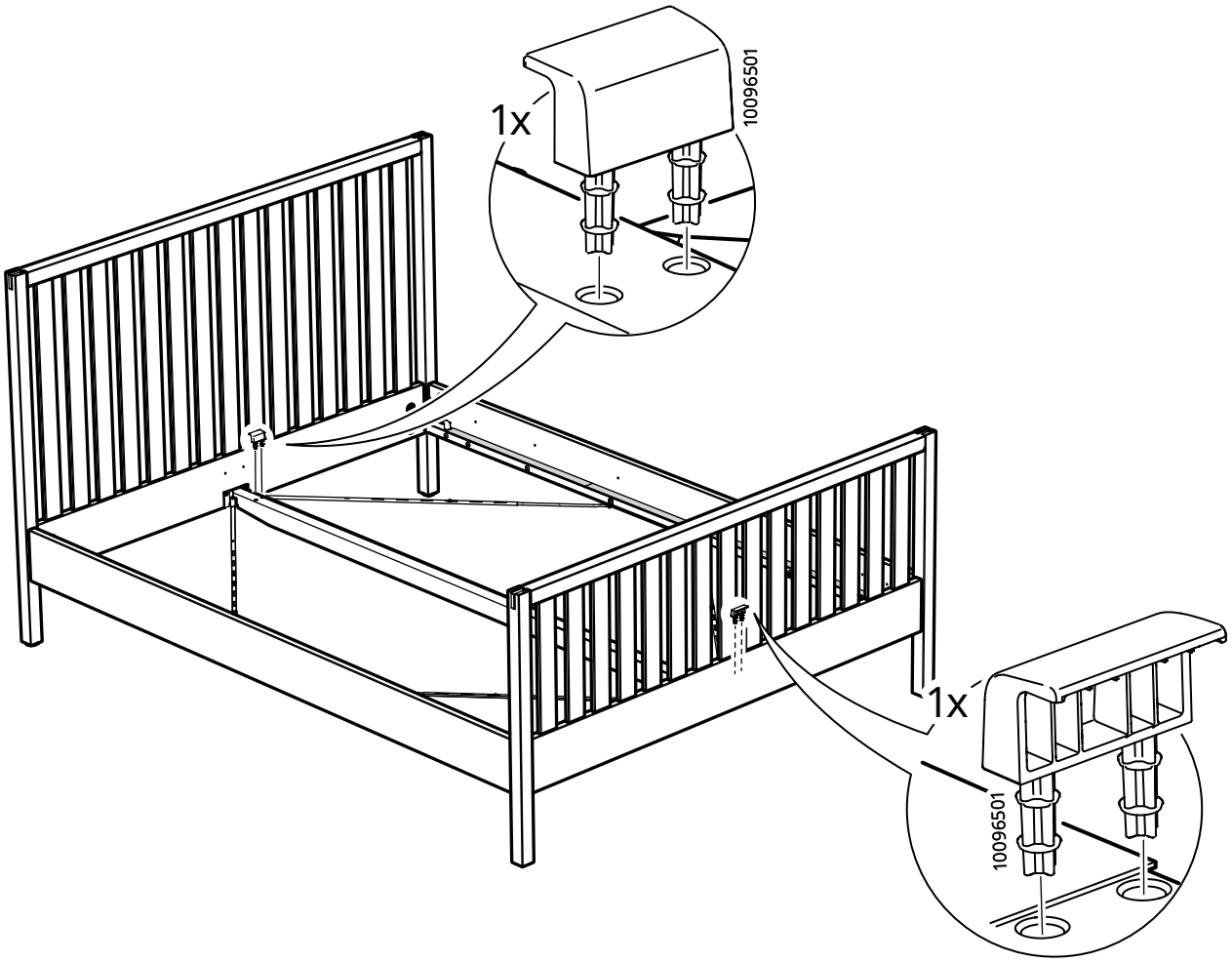

18

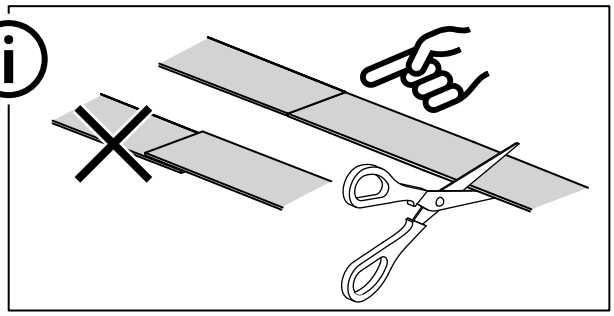

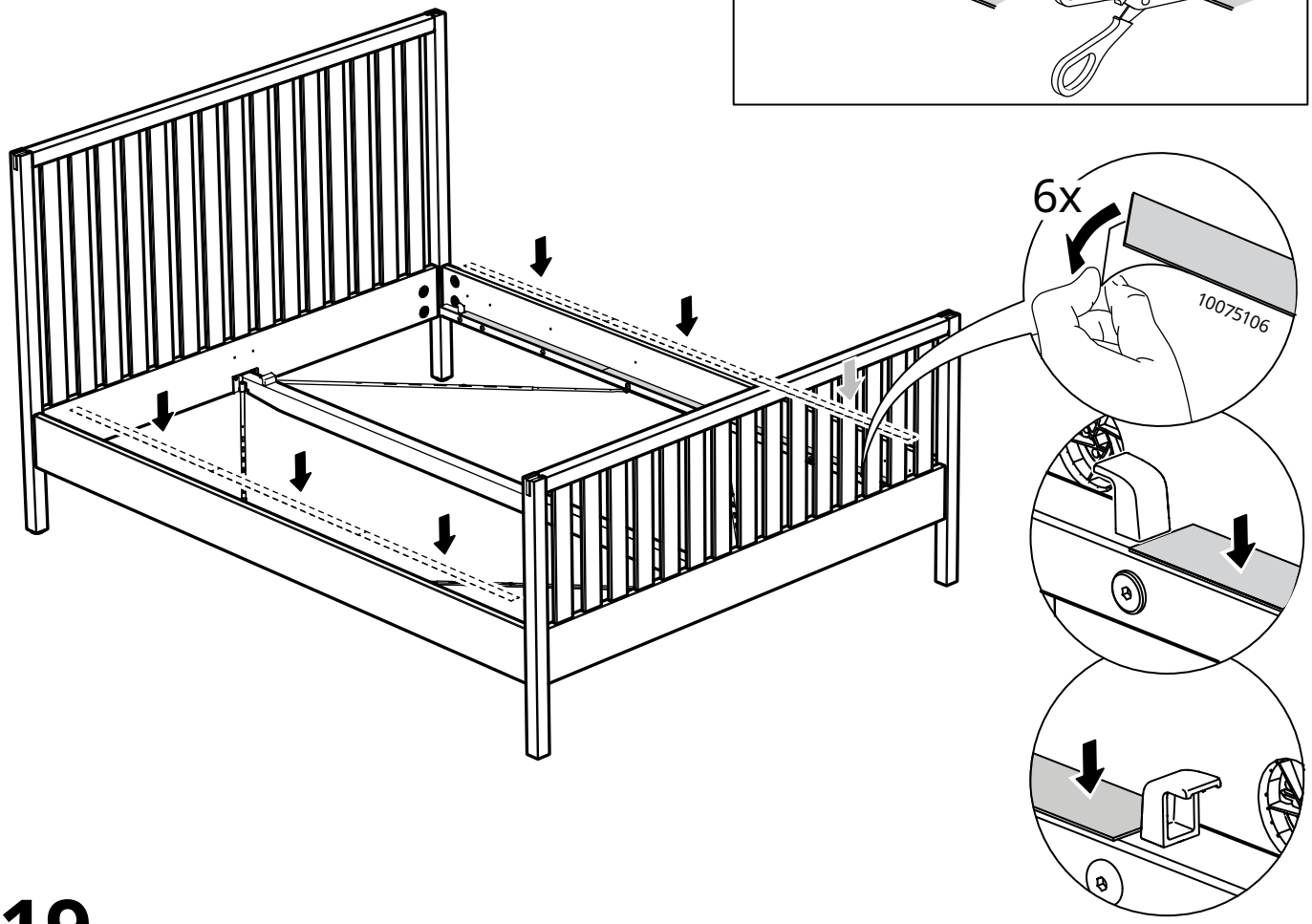

19

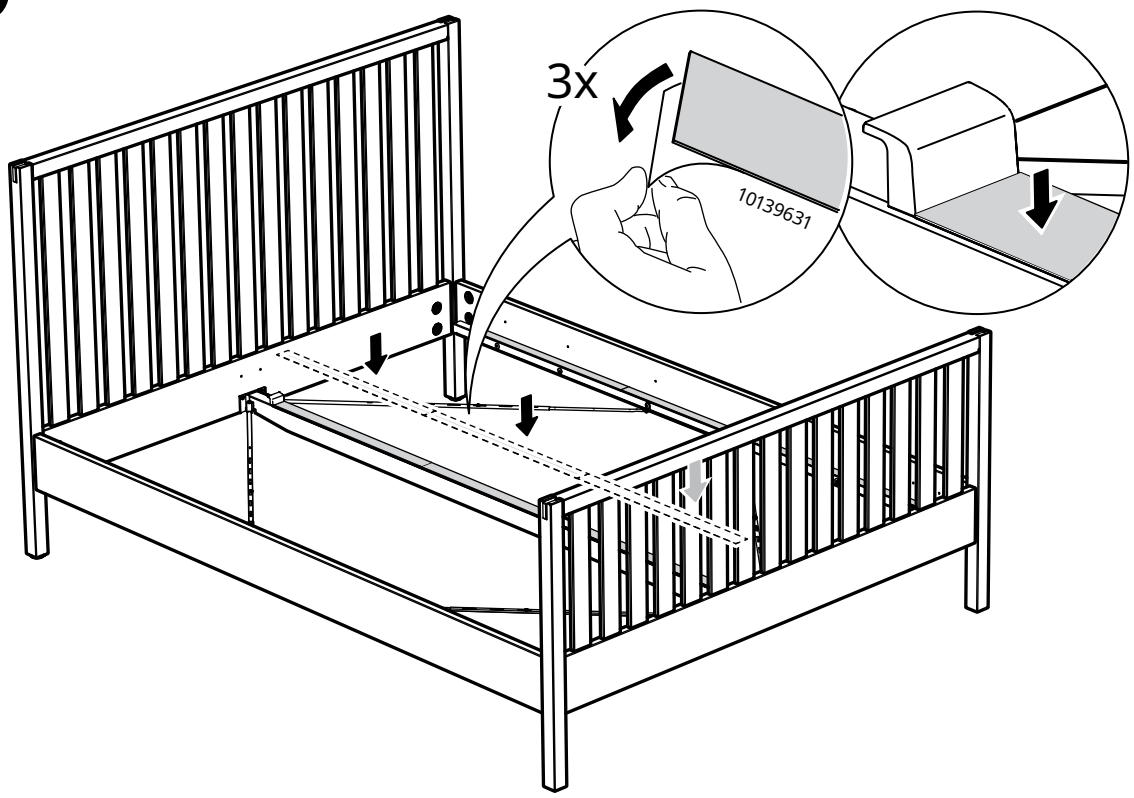

20



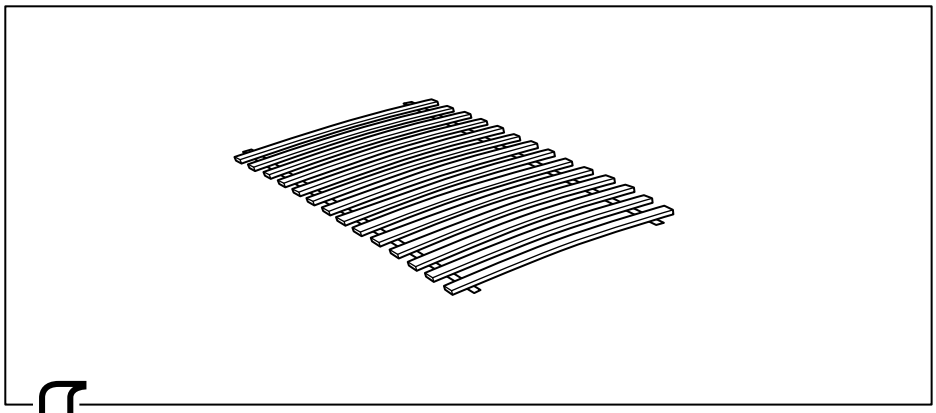

21

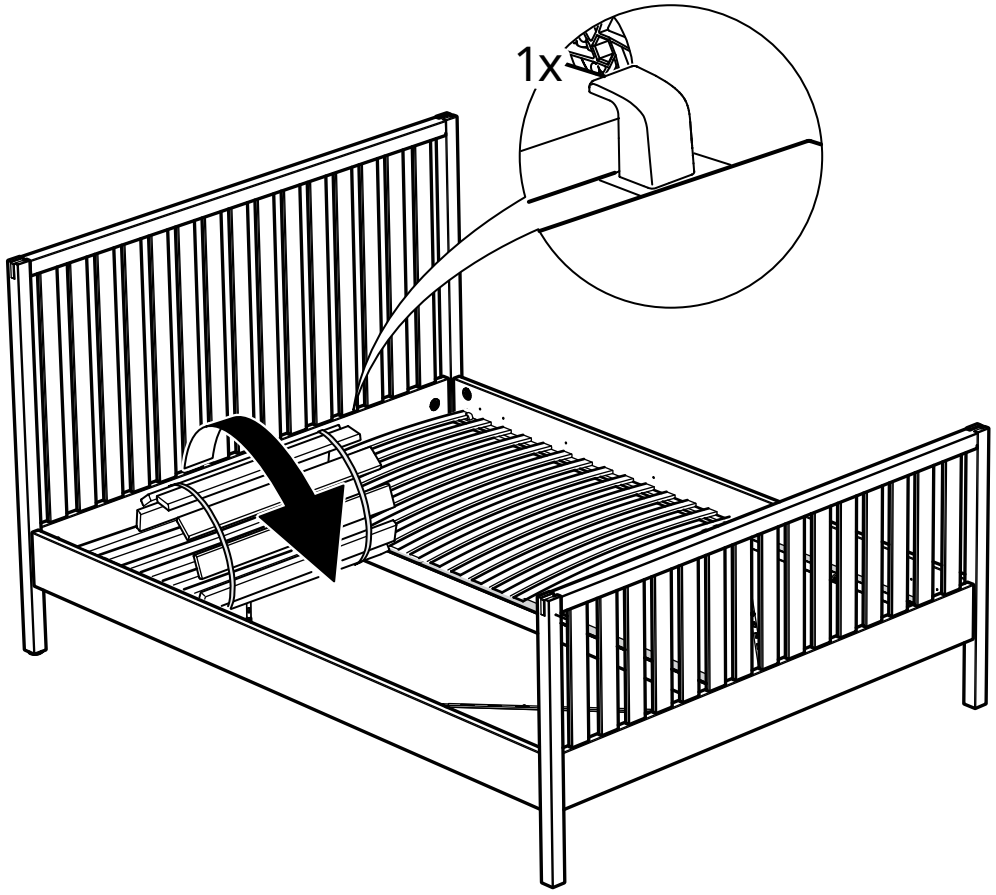

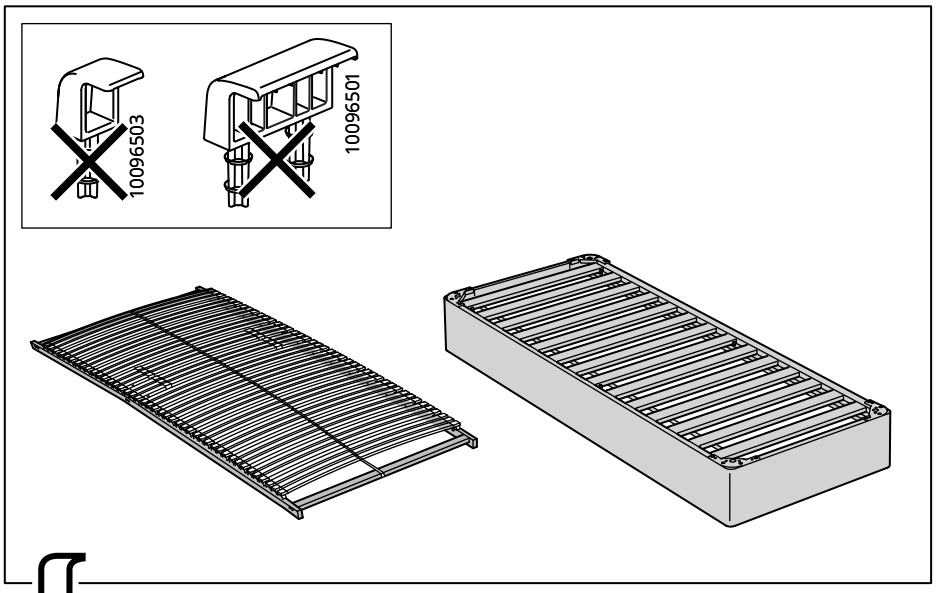

22

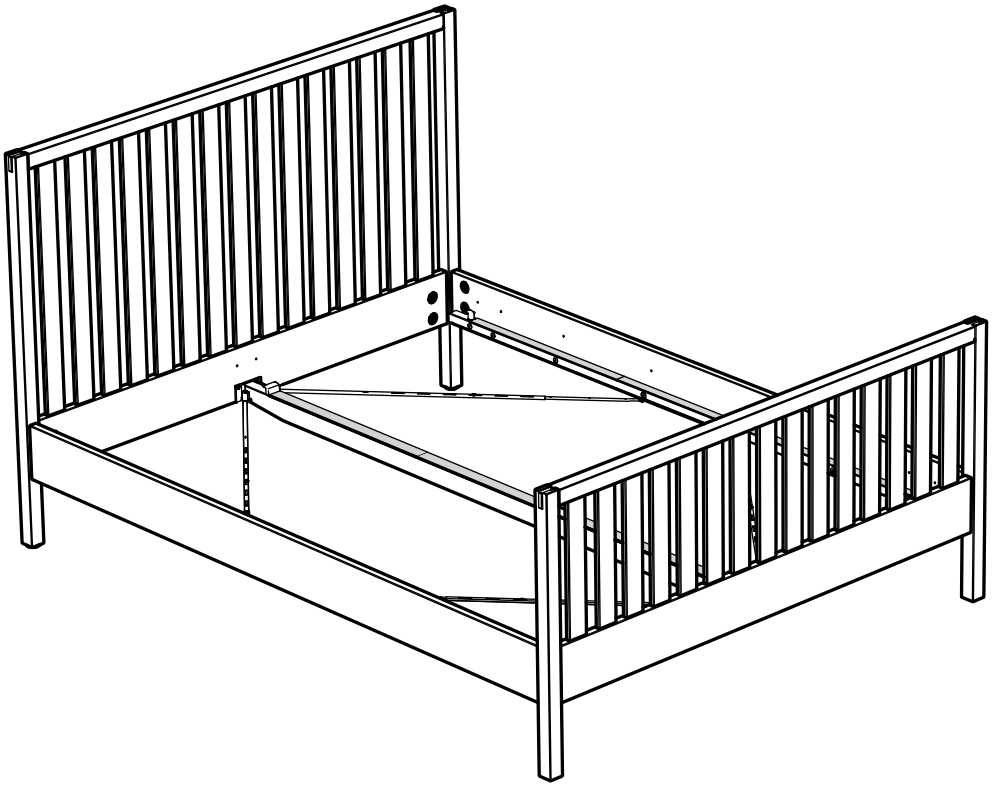

© Inter IKEA Systems B.V. 2025