GRYSNA

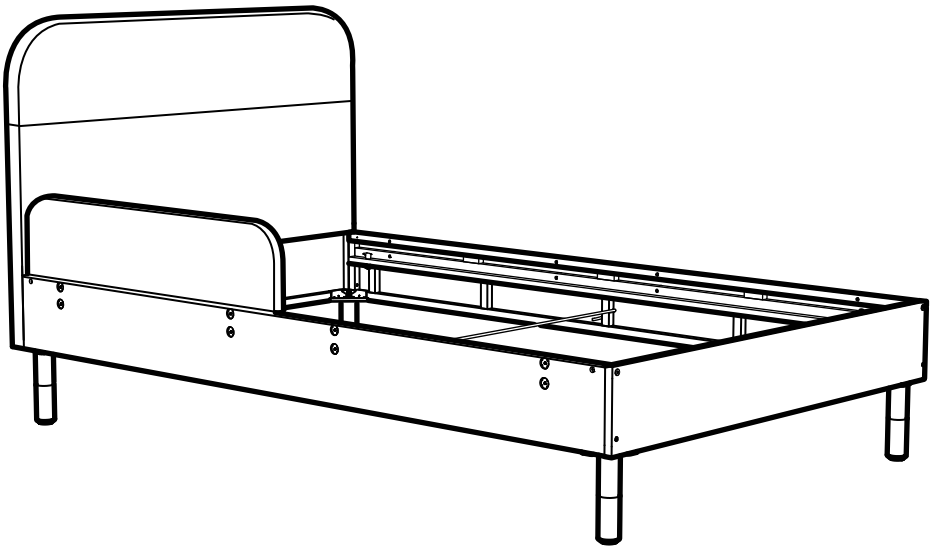

Design and Quality
IKEA of Sweden

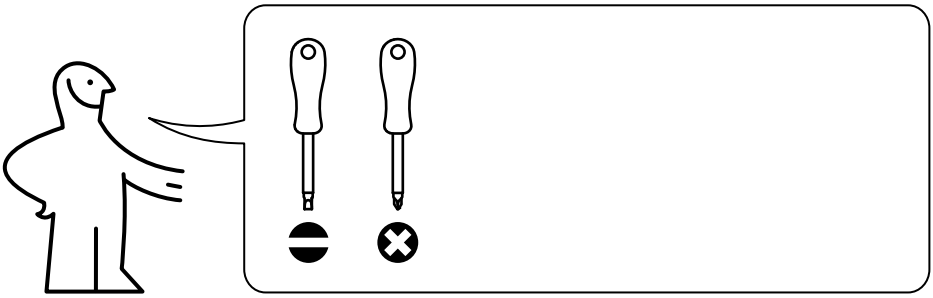

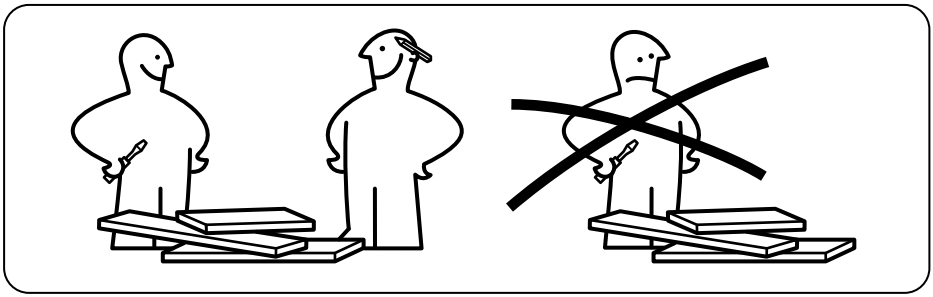

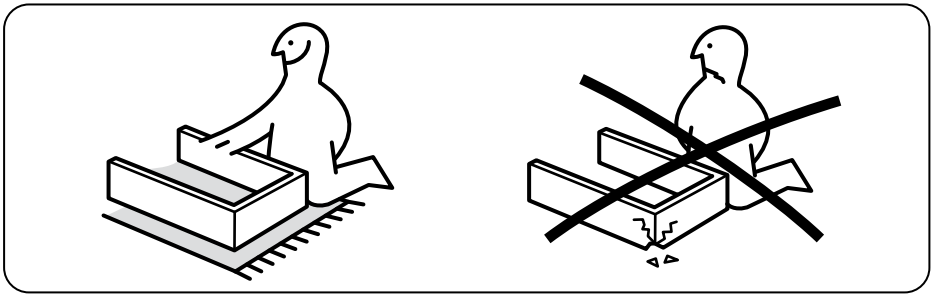

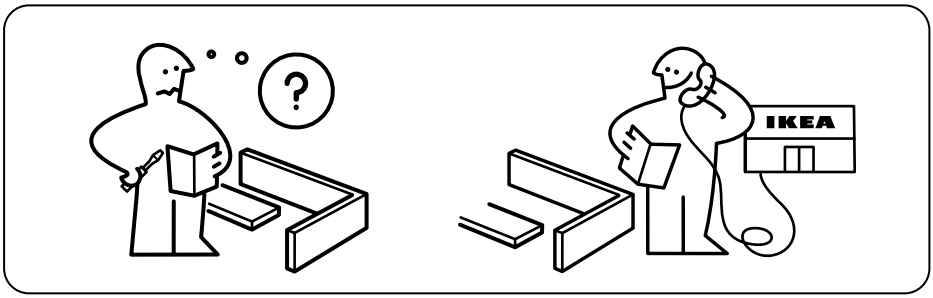
?
IKEA

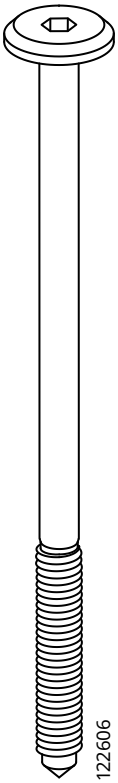

2x

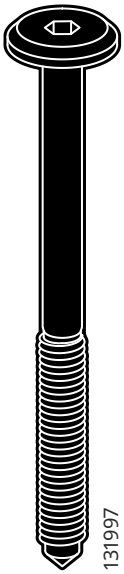

2x

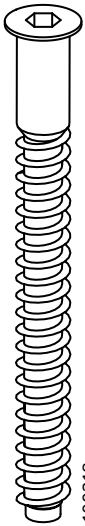

2x

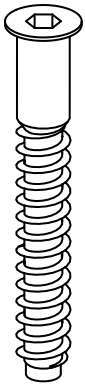

2x

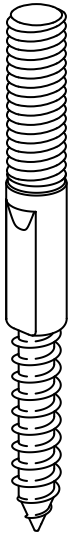

3x

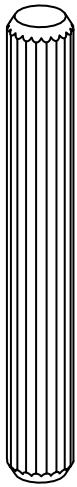

4x

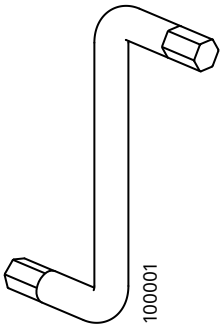

1x

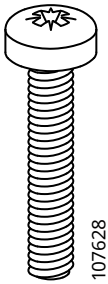

4x

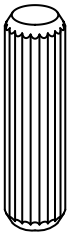

8x

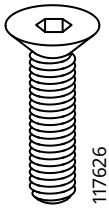

6x

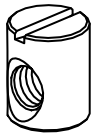

4x

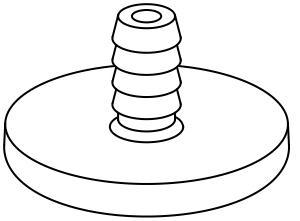

4x

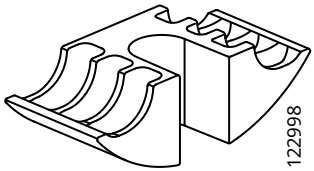

3x

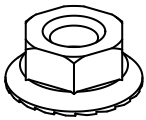

7x

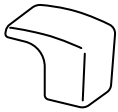

4x

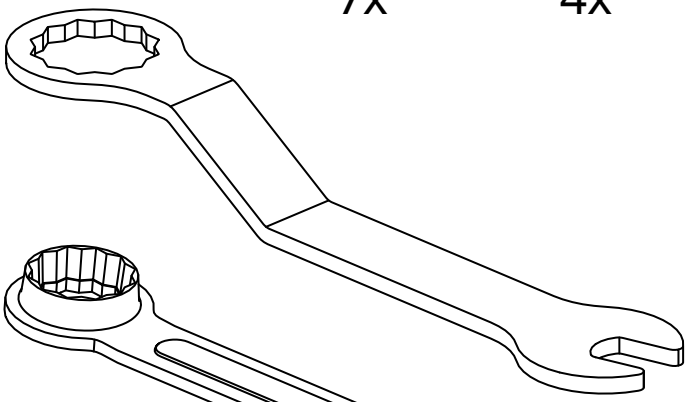

1x

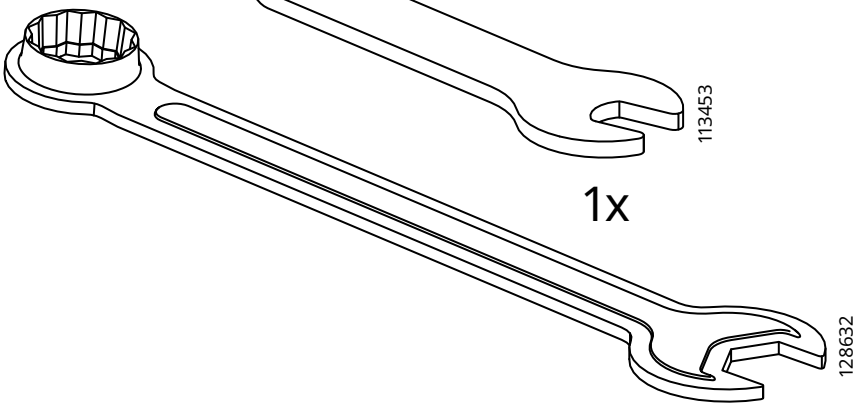

1x

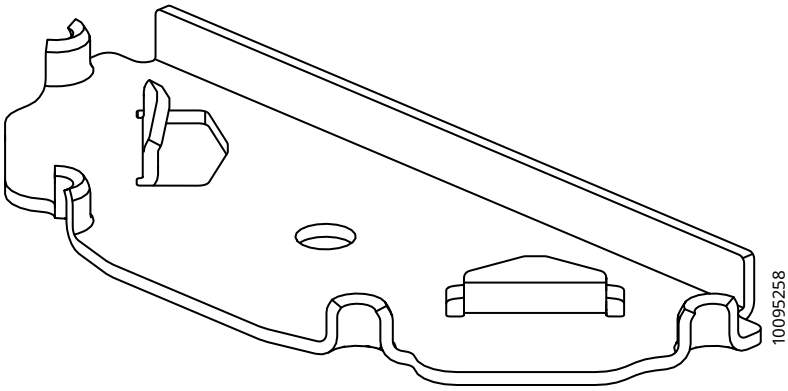

4x

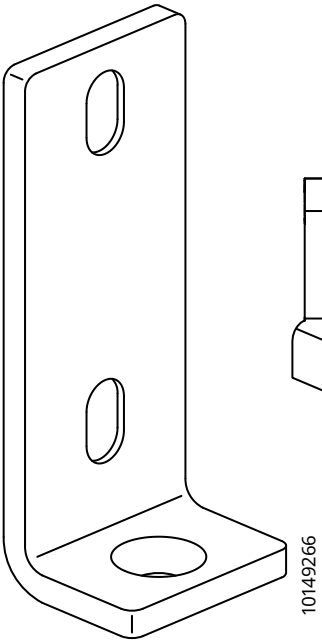

2x

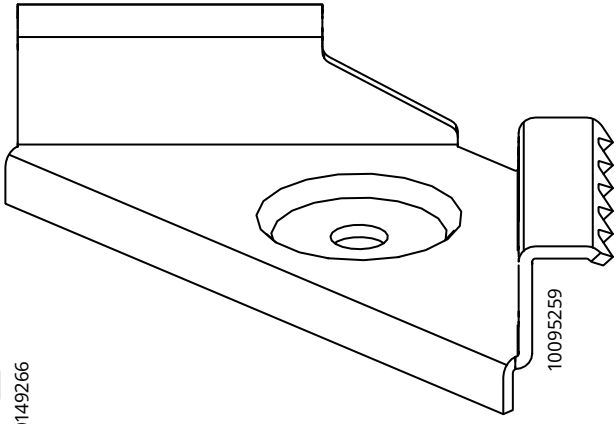

4x

1

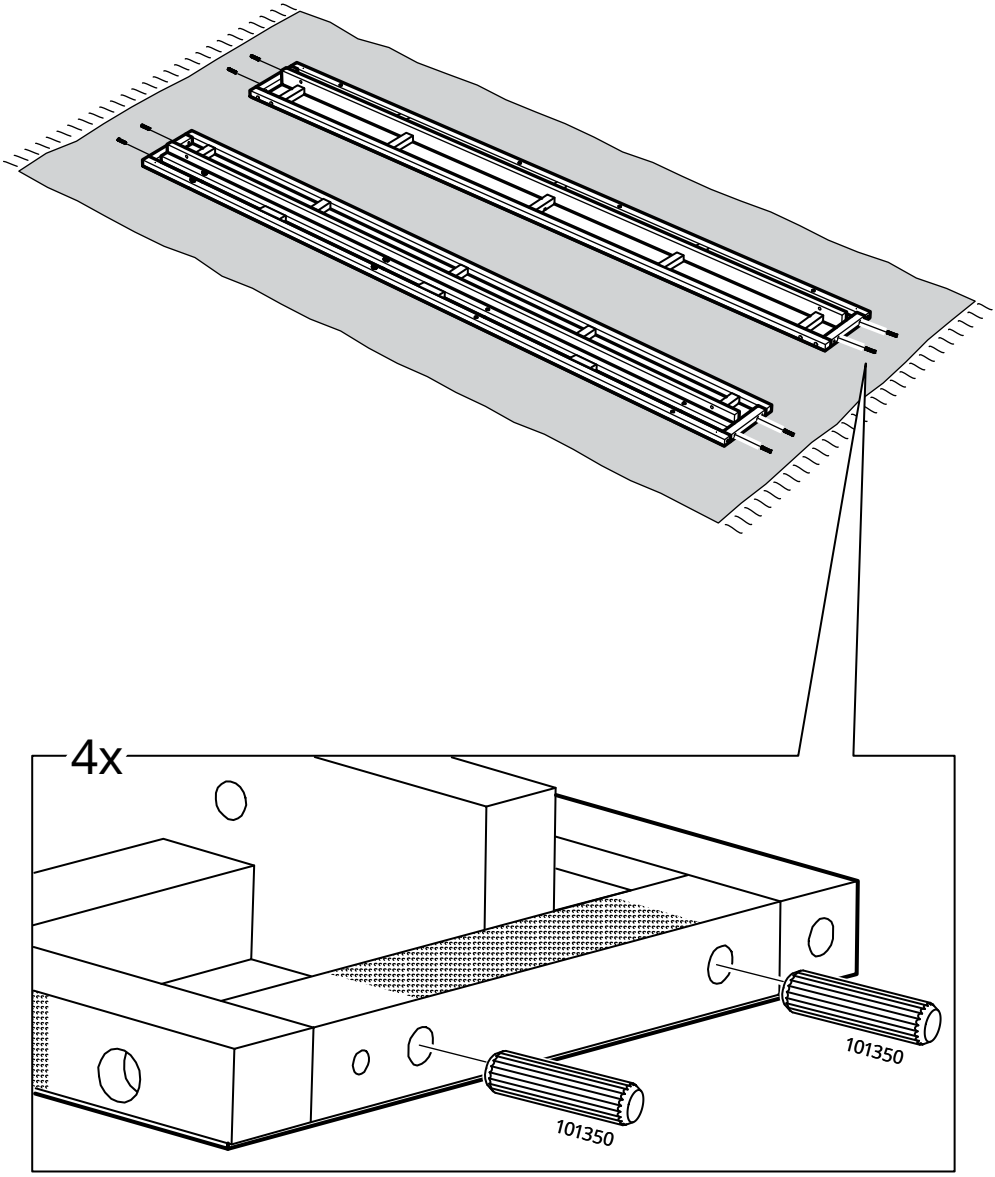

2

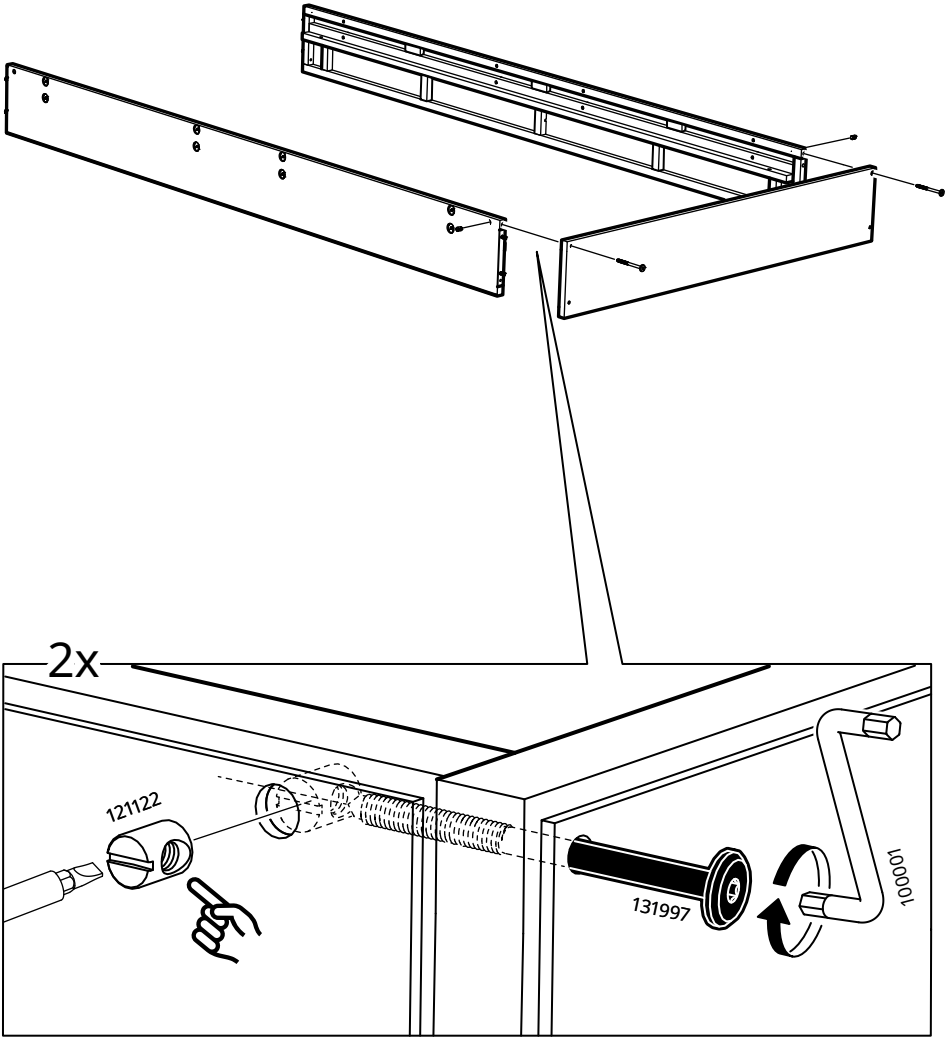

3

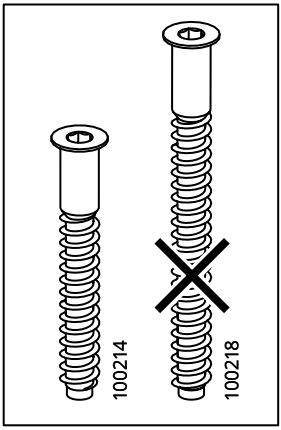

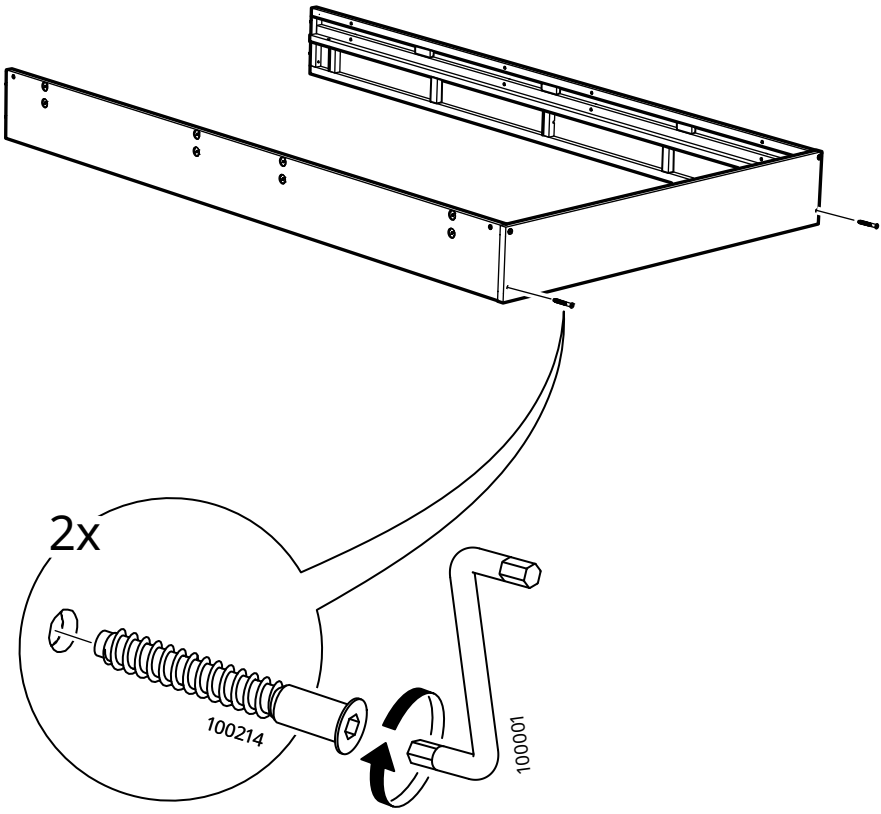

4

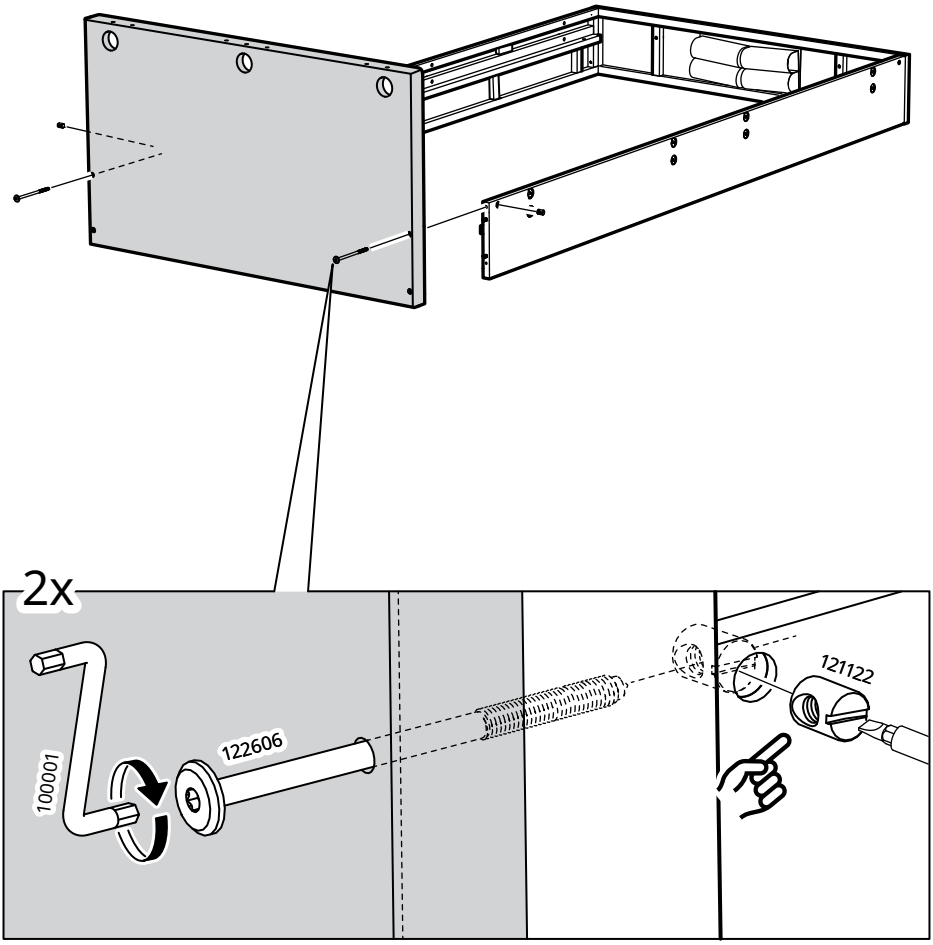

5

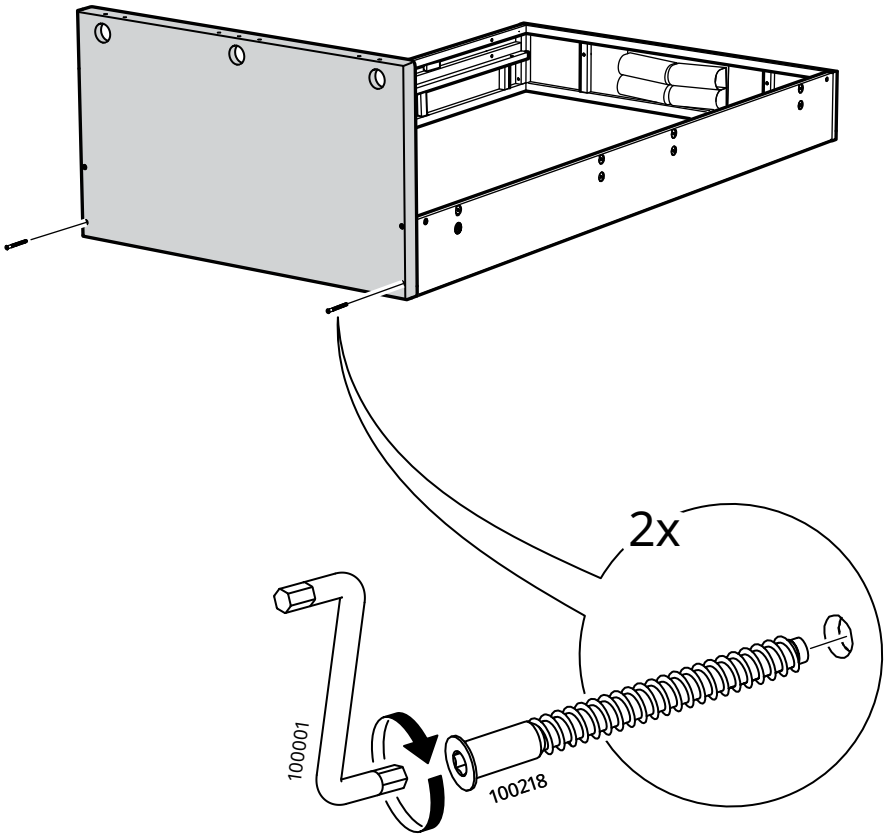

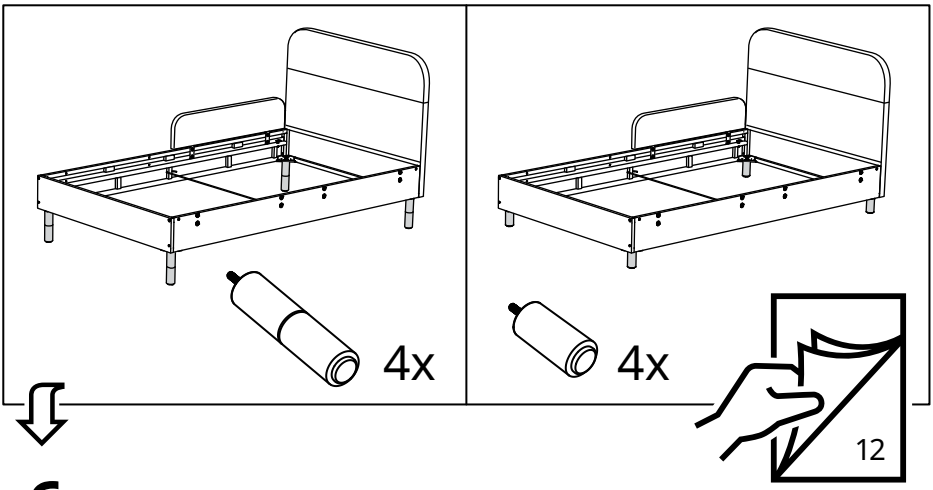

6

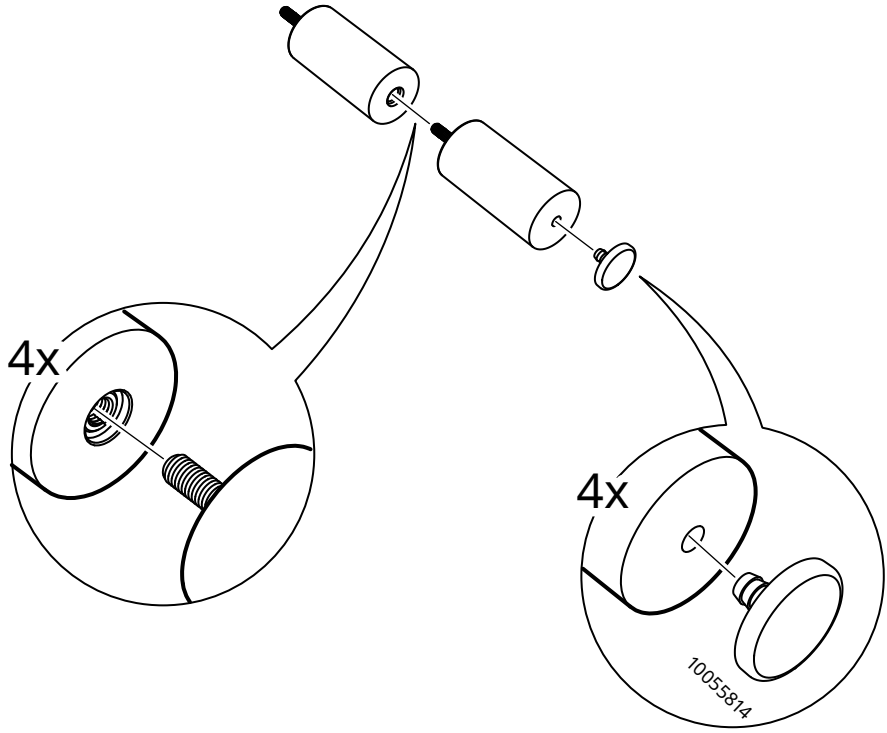

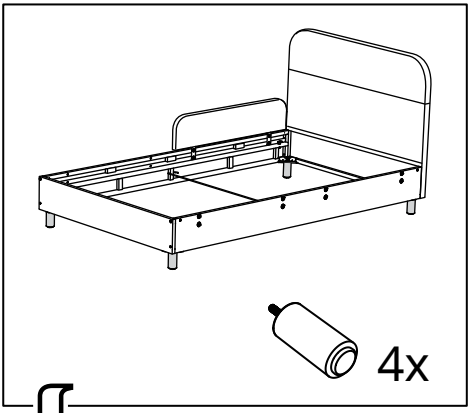

6

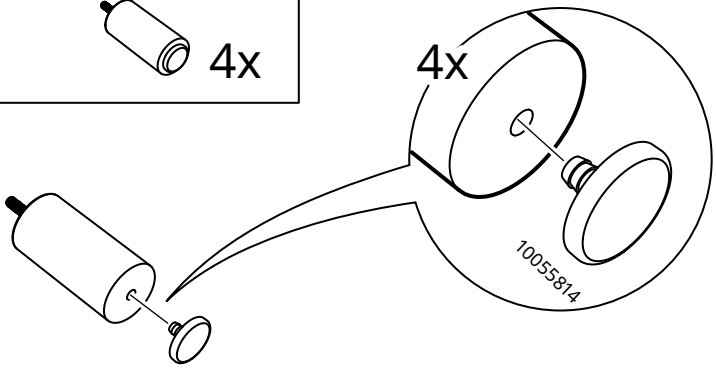

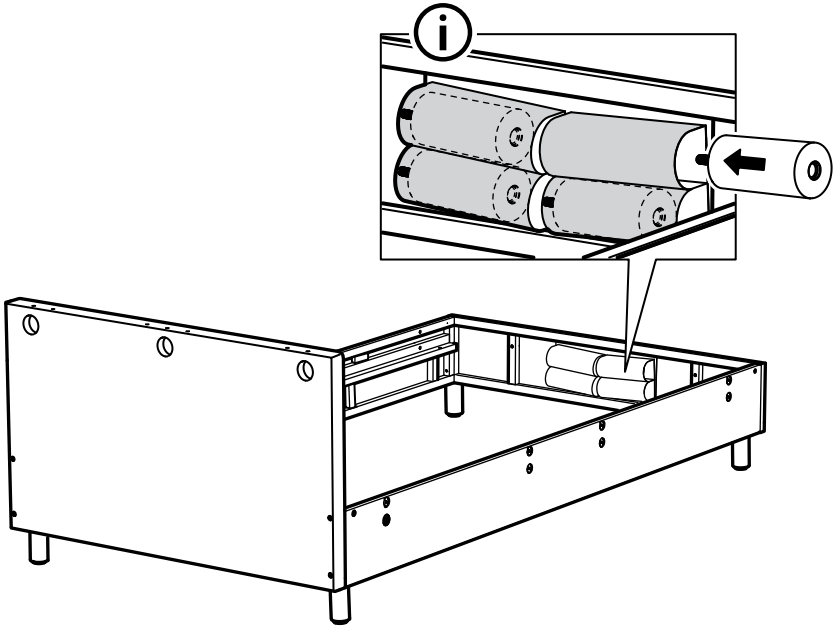

7

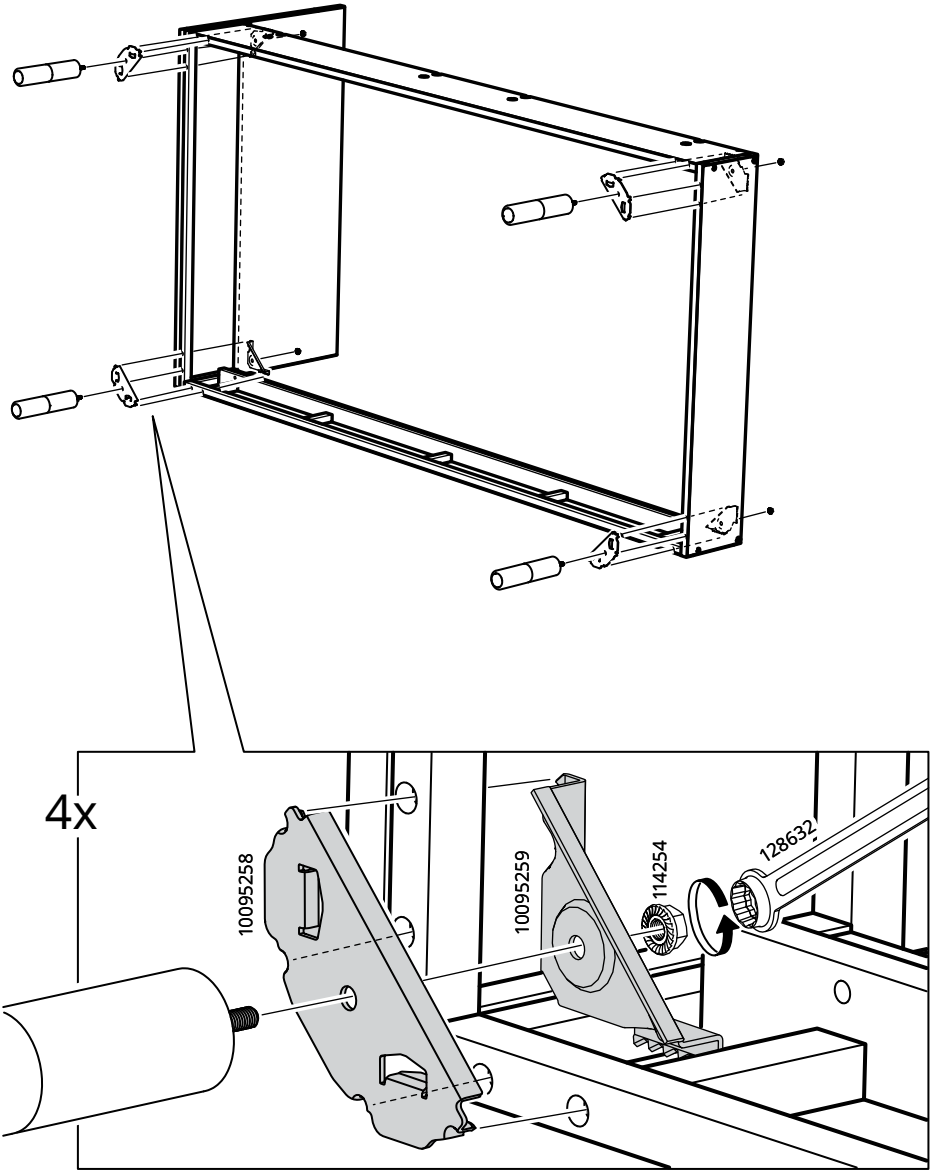

8

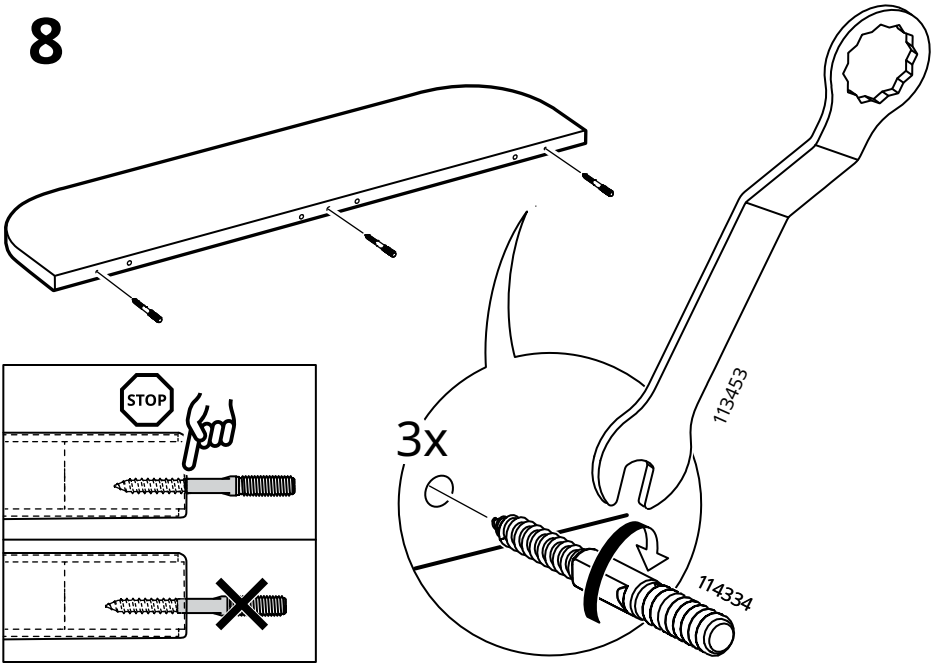

9

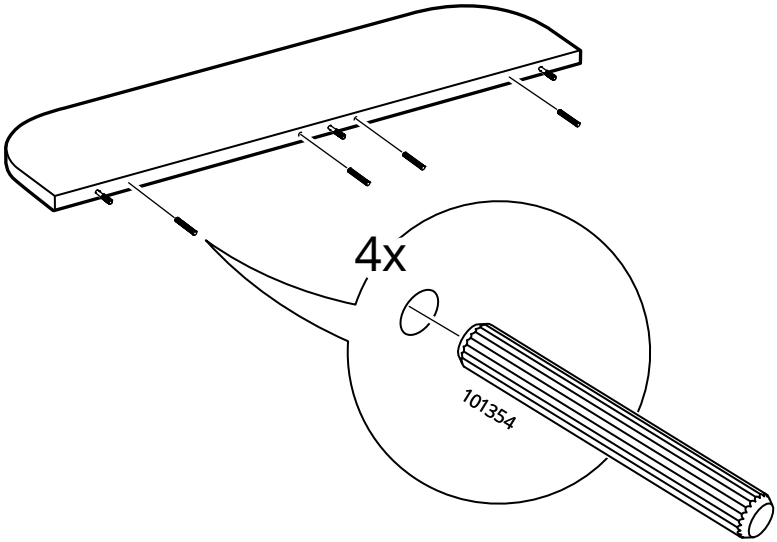

10

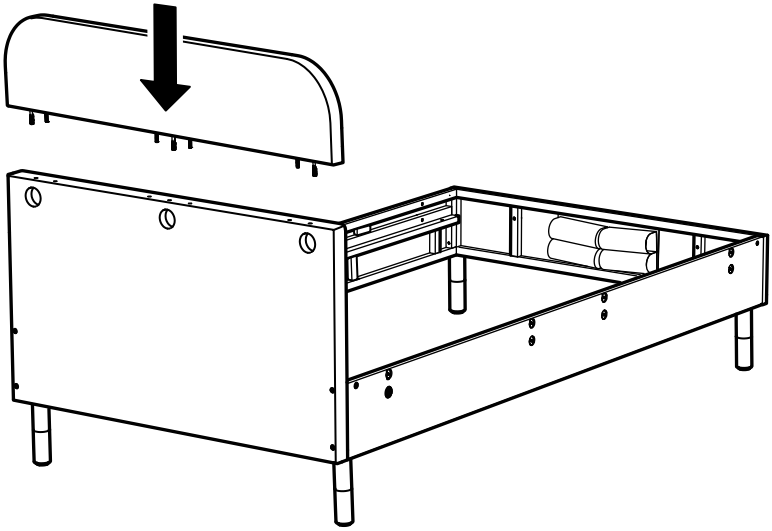

11

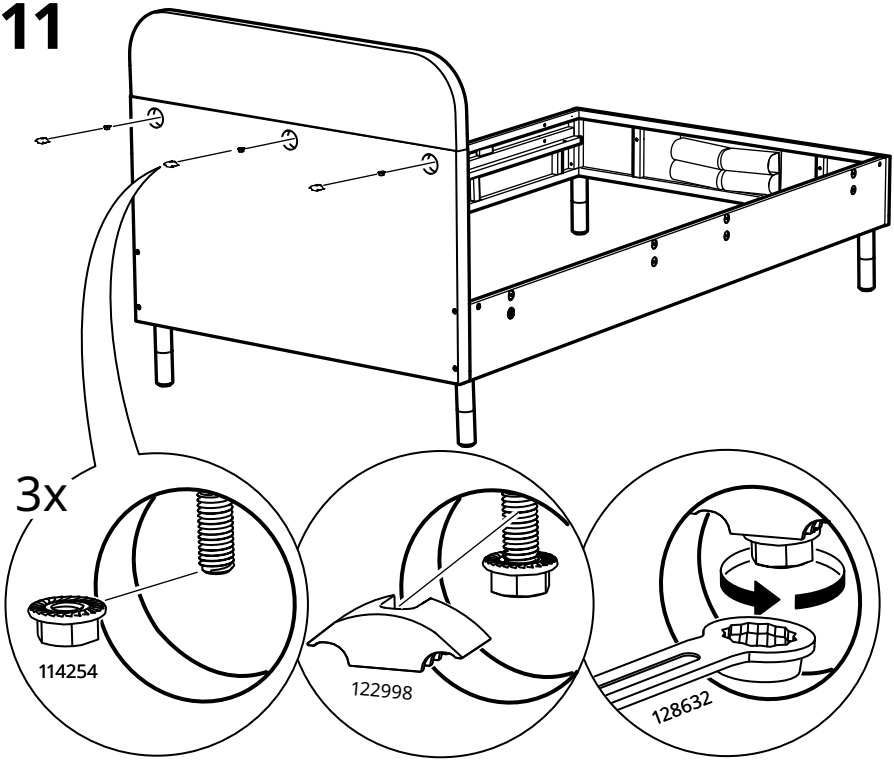

12

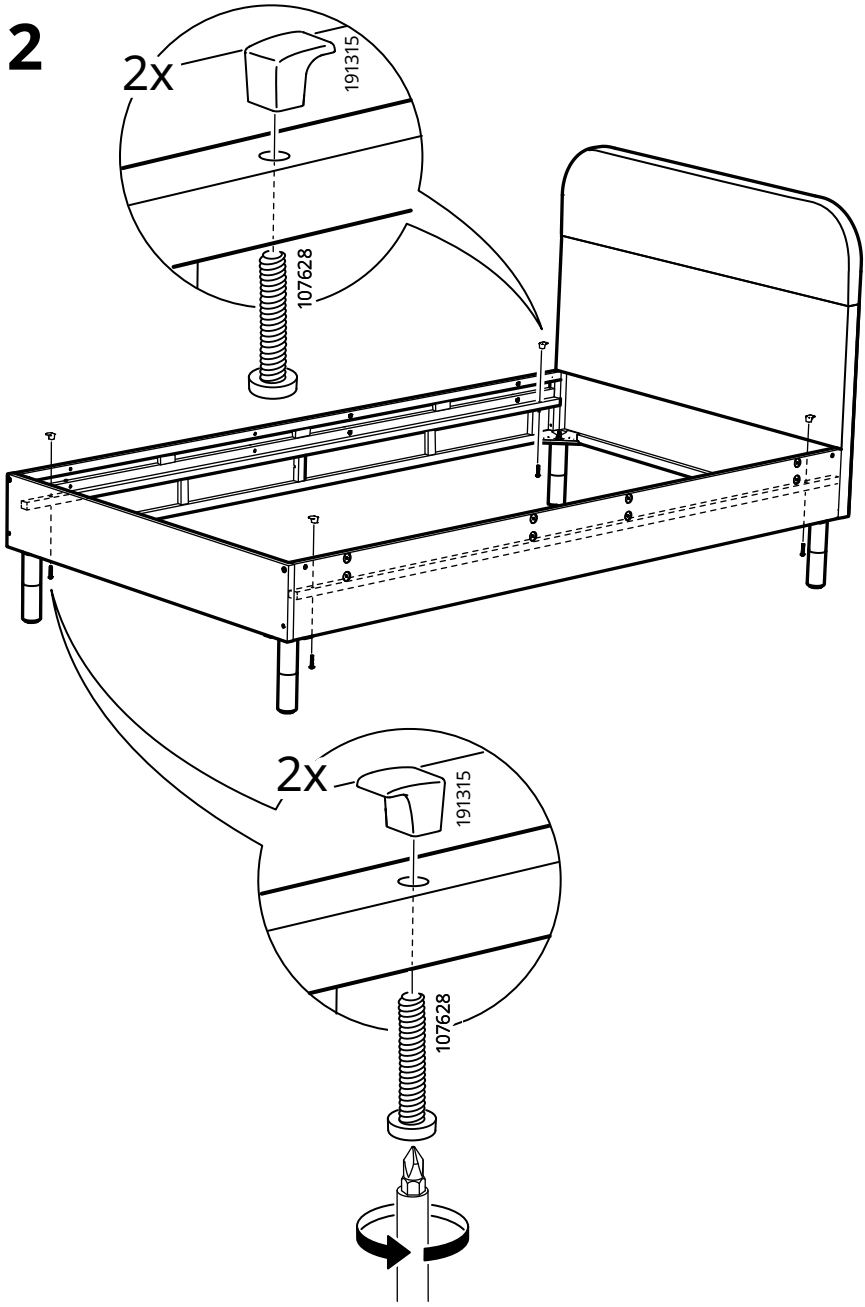

13

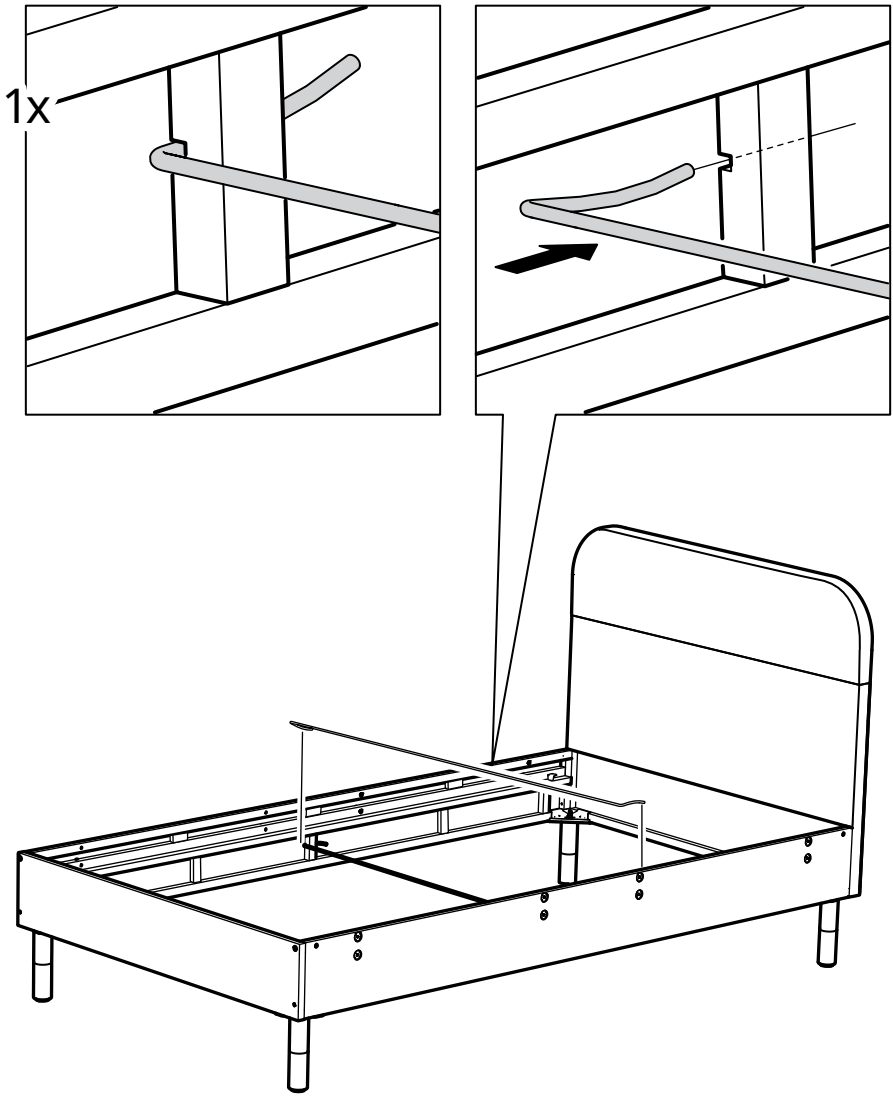

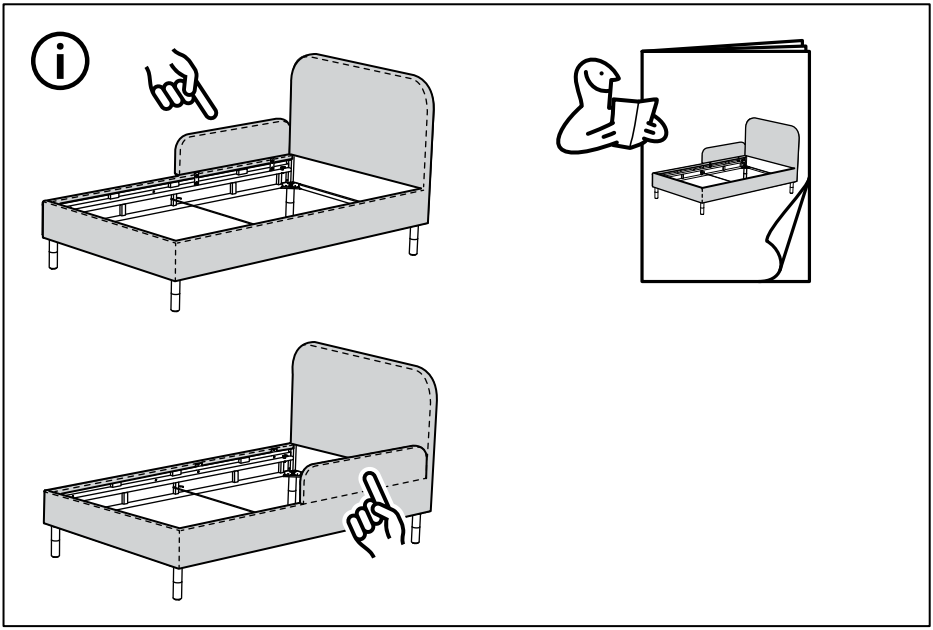

14

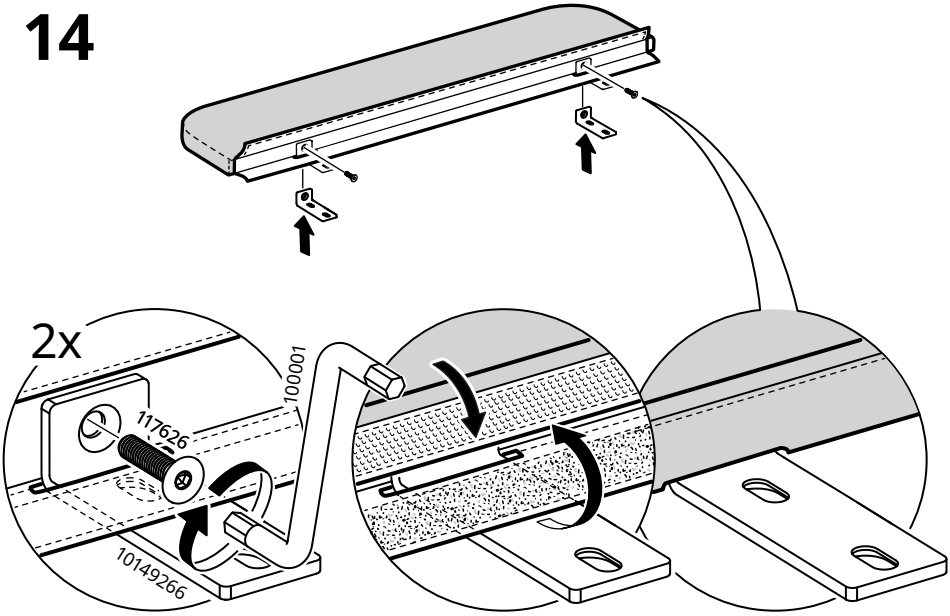

15

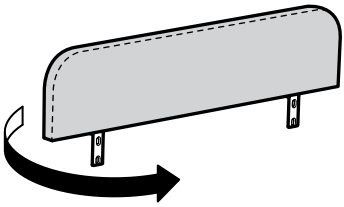

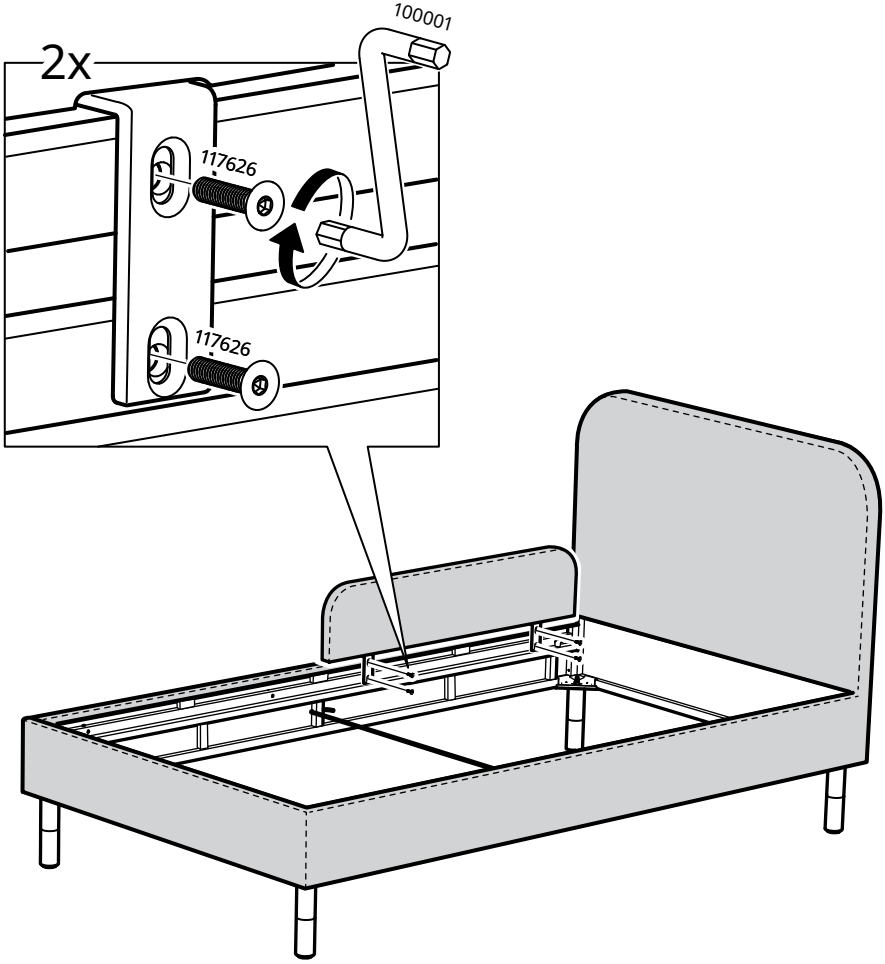

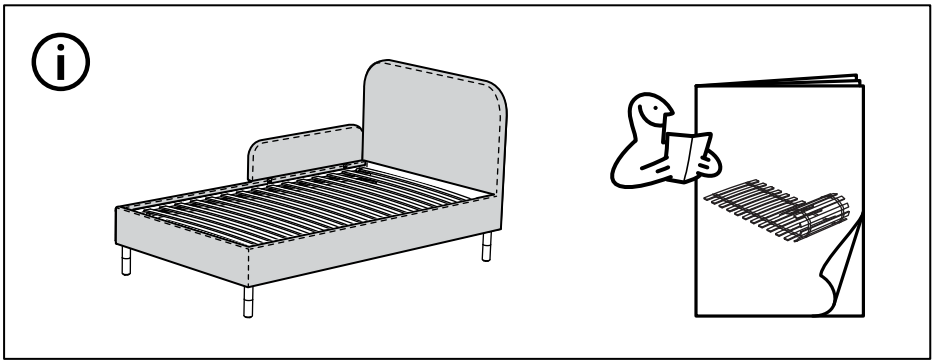

16

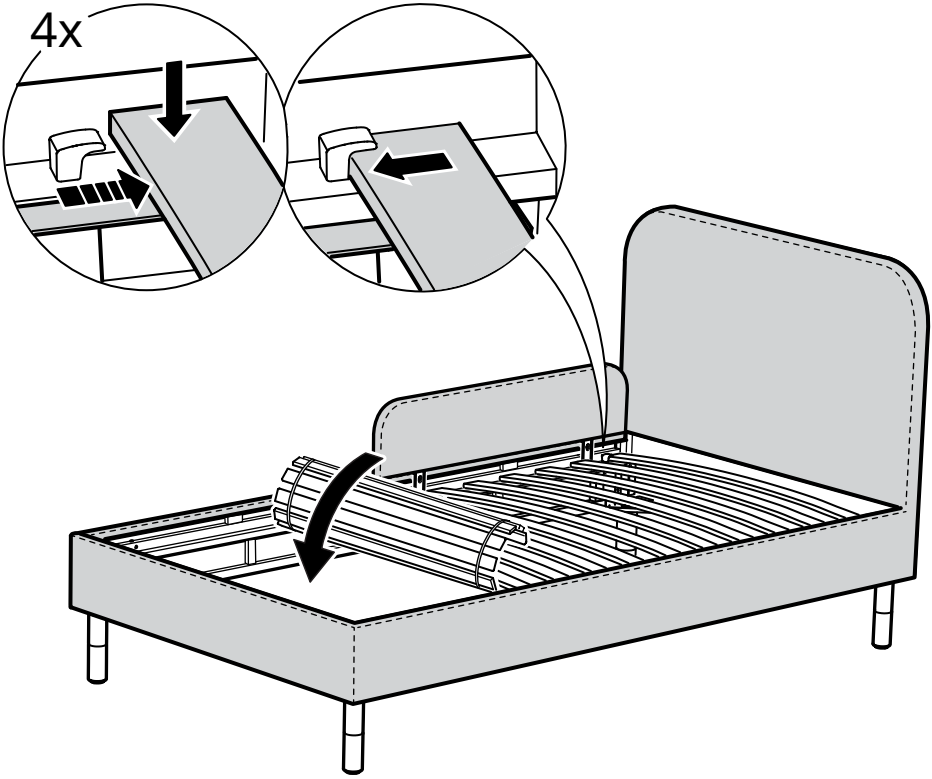

© Inter IKEA Systems B.V. 2026
2026-02-23 AA-2693391-1