GRYSNA

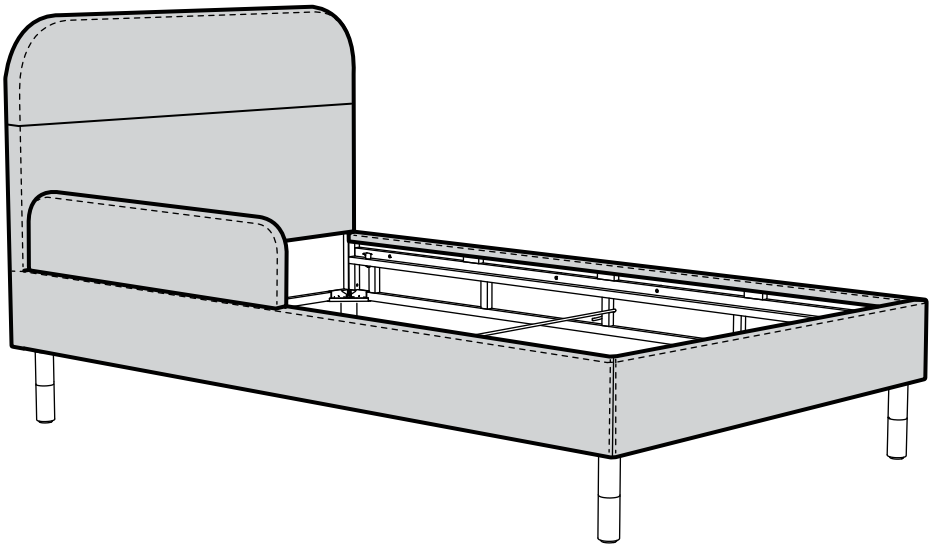

Design and Quality
IKEA of Sweden

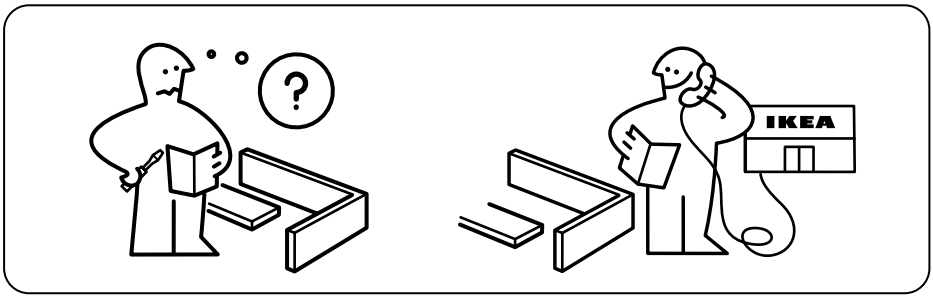

1

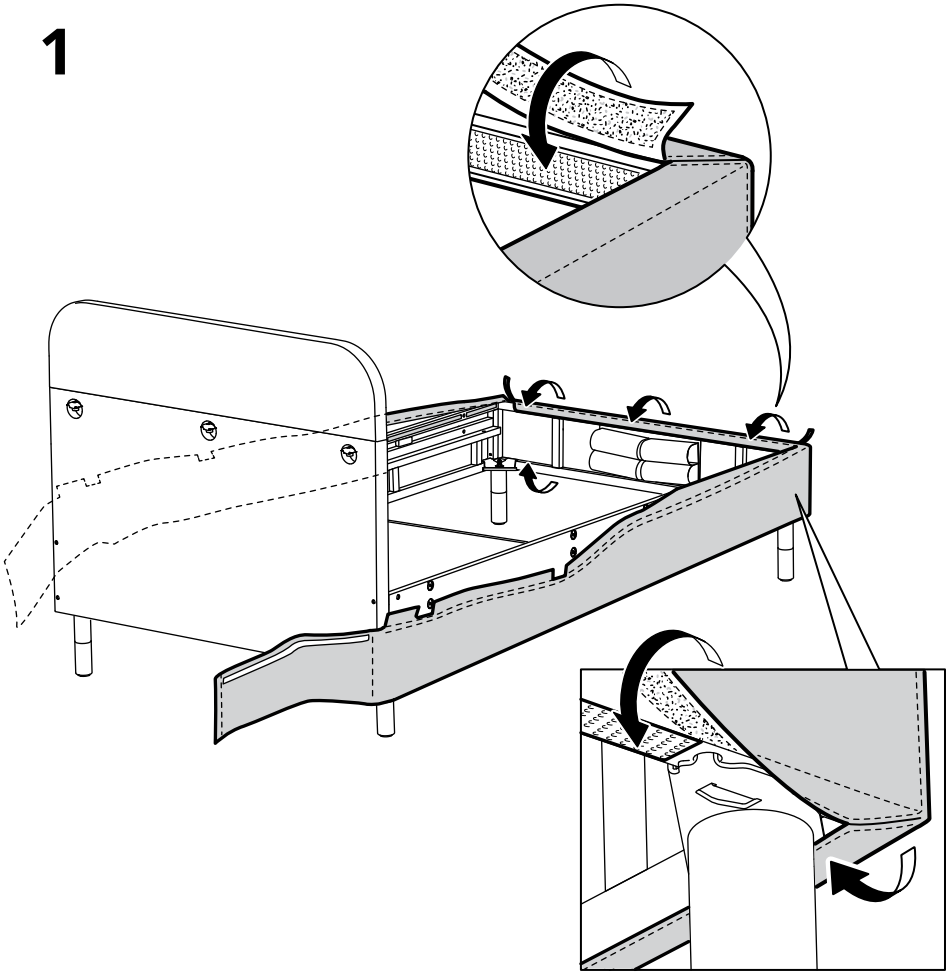

2

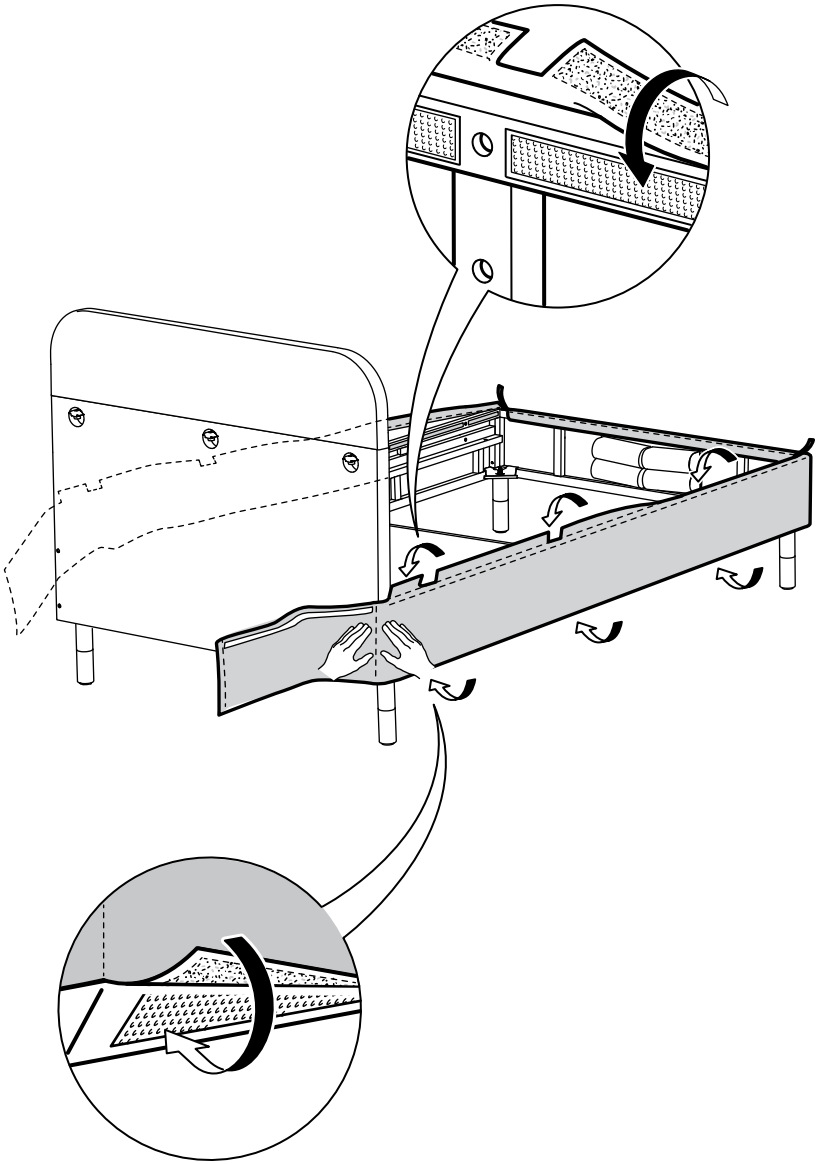

3

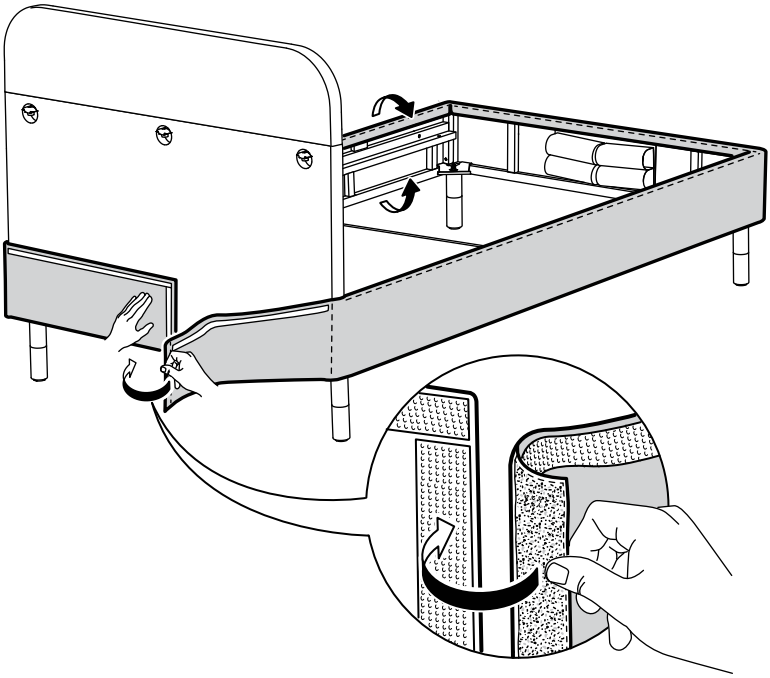

4

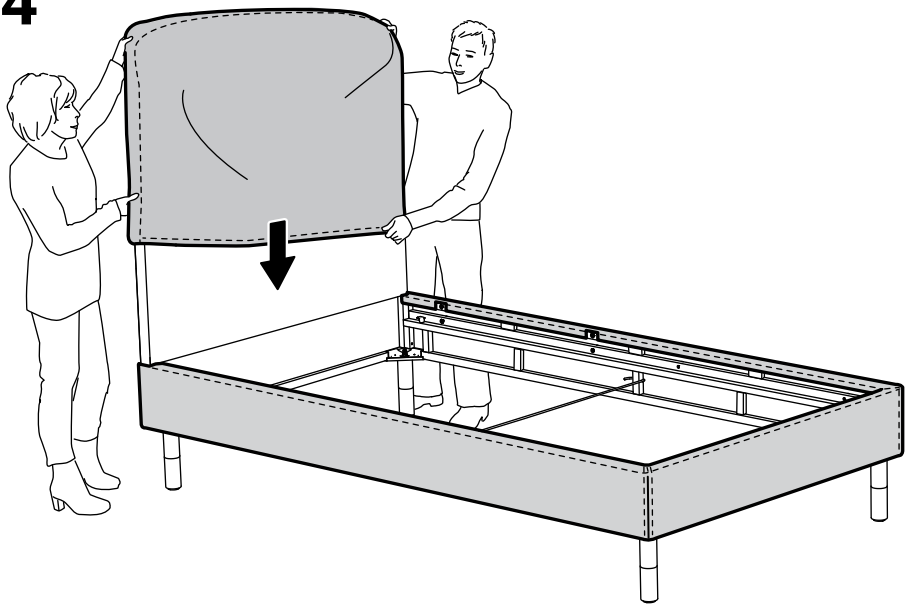

5

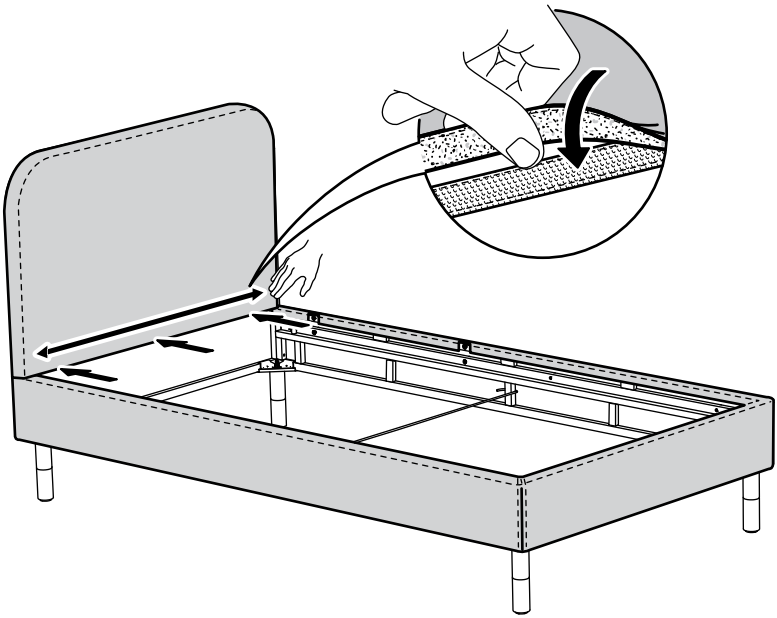

6

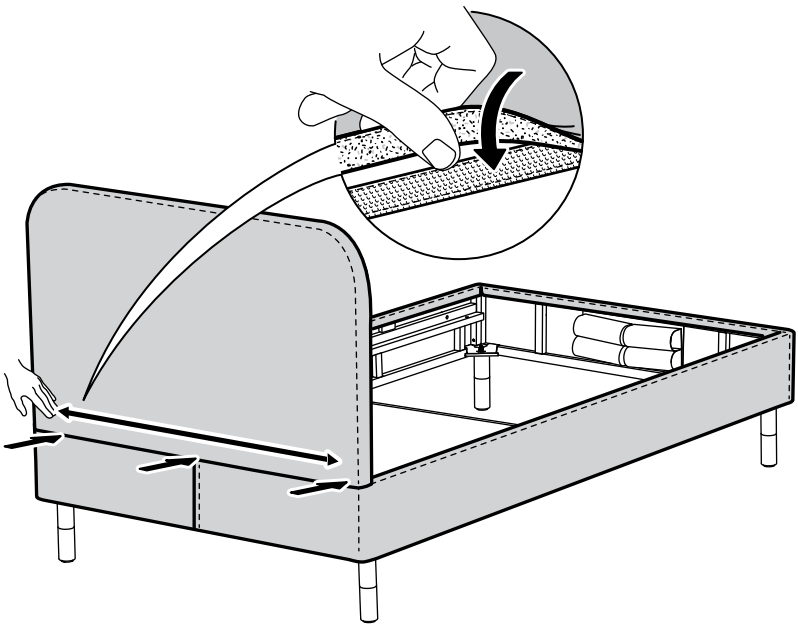

7

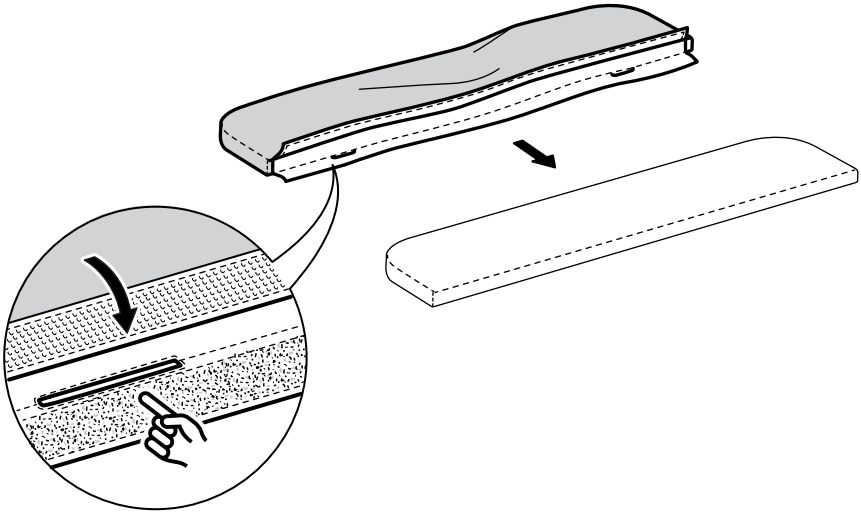

8

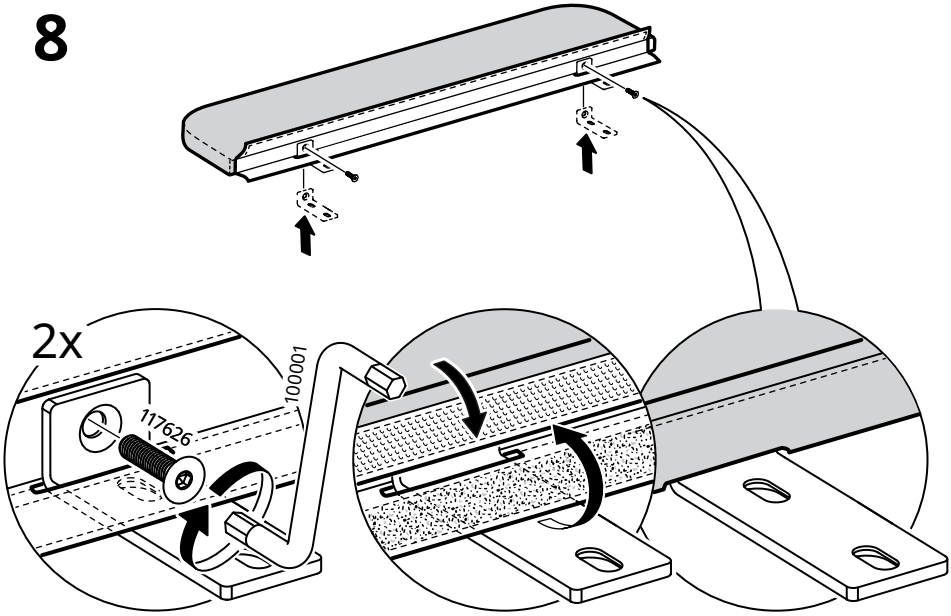

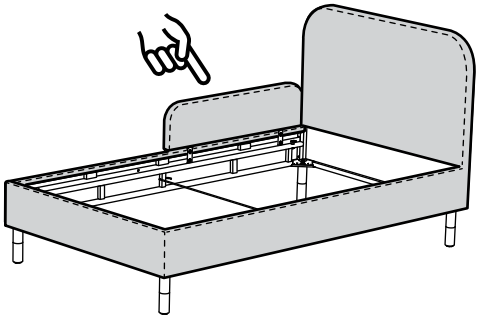

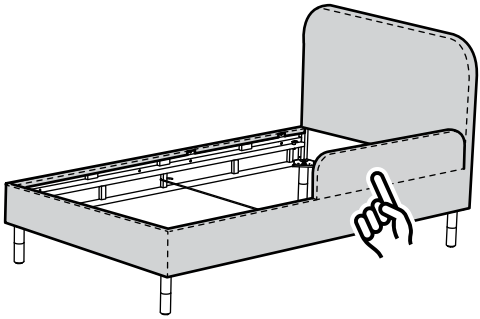

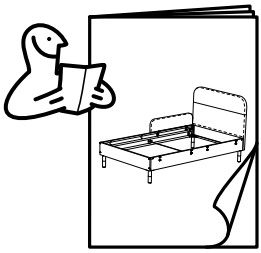

© Inter IKEA Systems B.V. 2026
2026-03-03 AA-2693427-1