# FÅGLARÖ

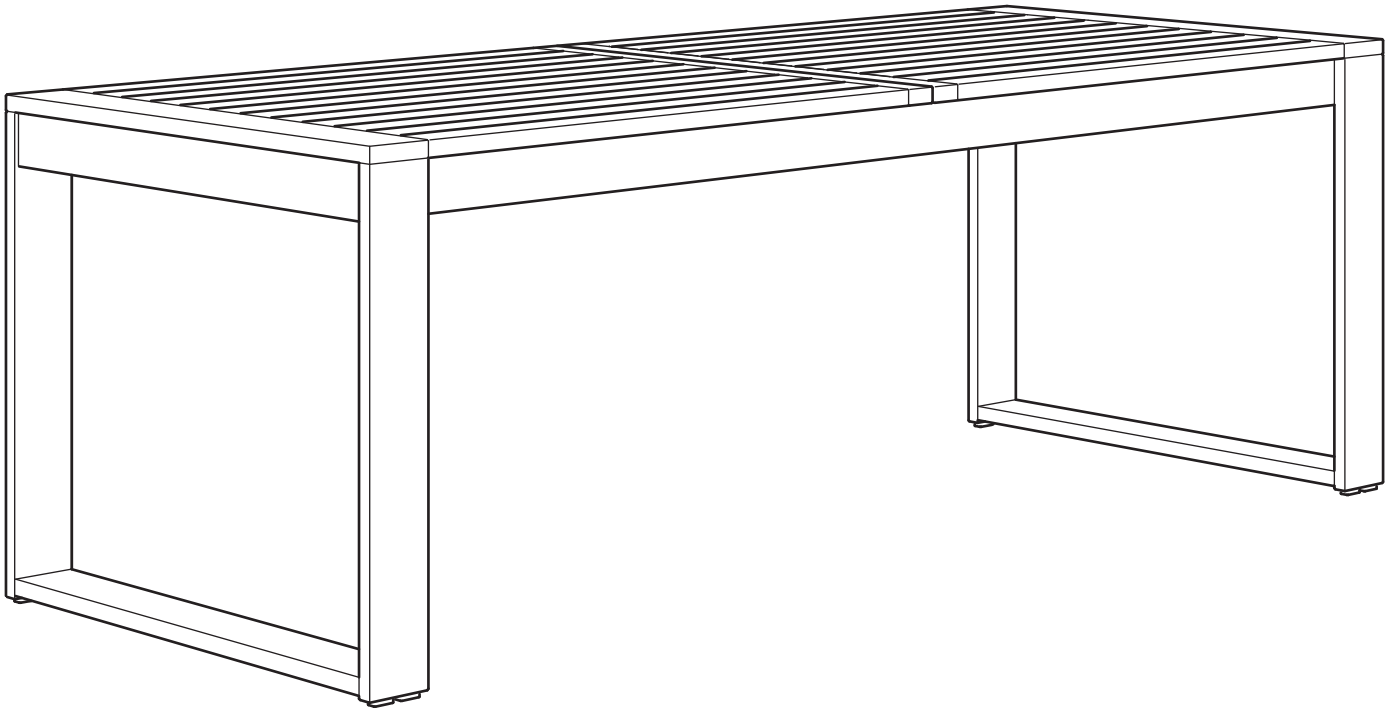

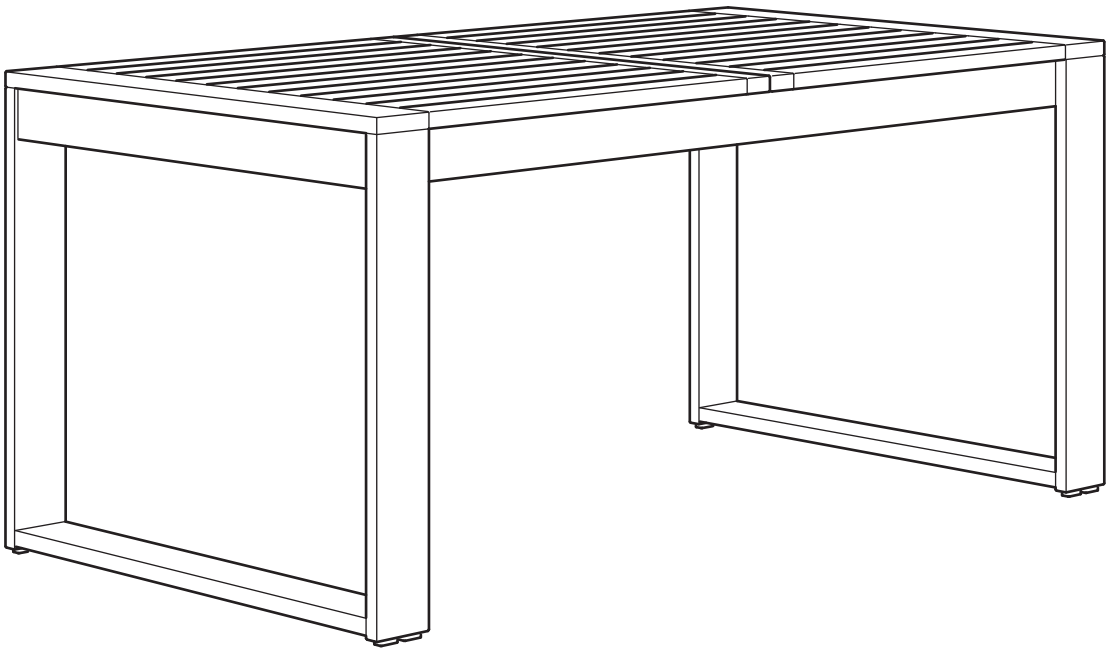

Design and Quality
IKEA of Sweden

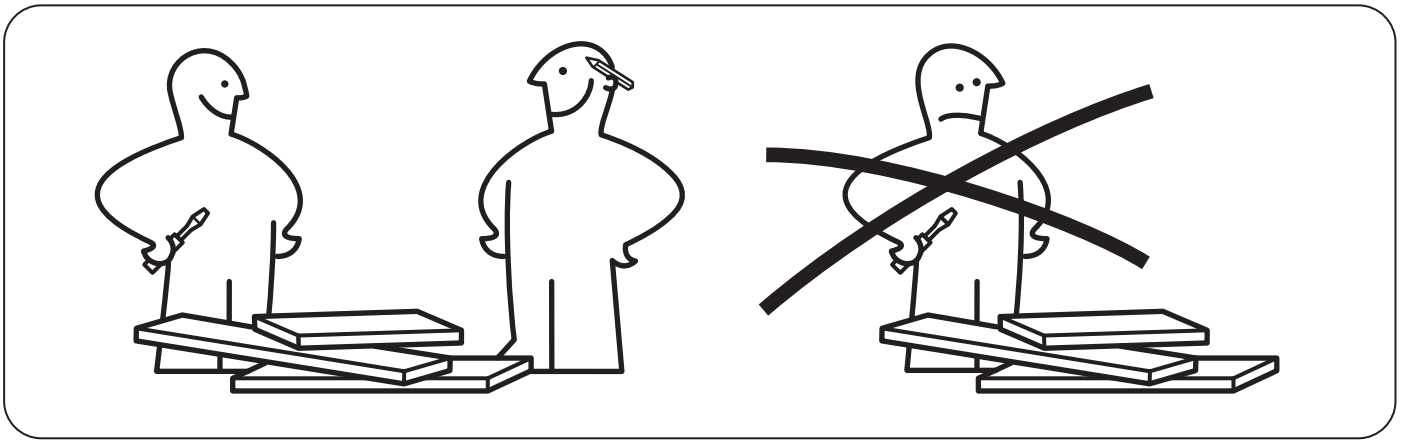

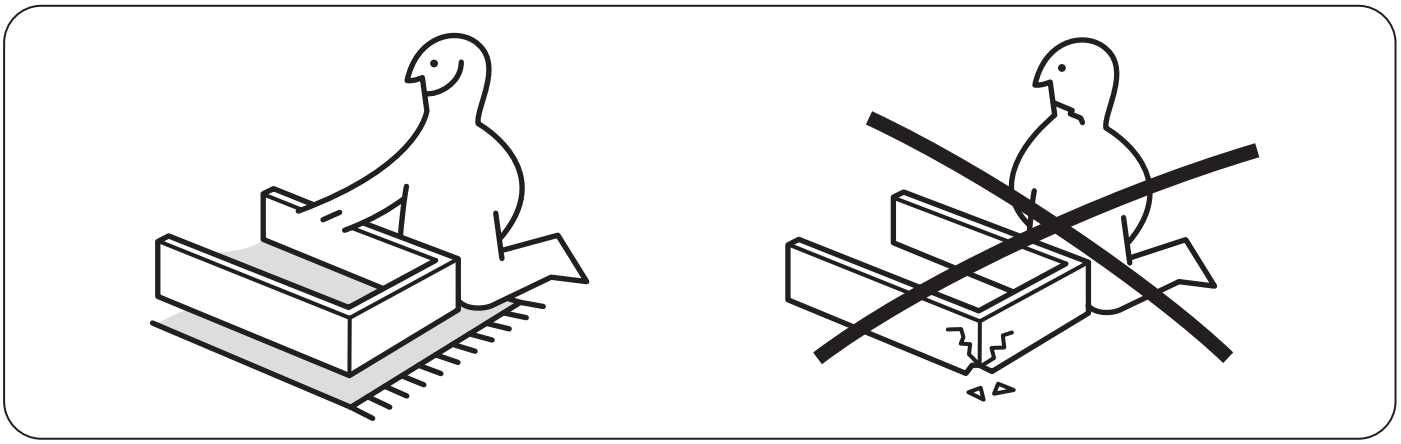

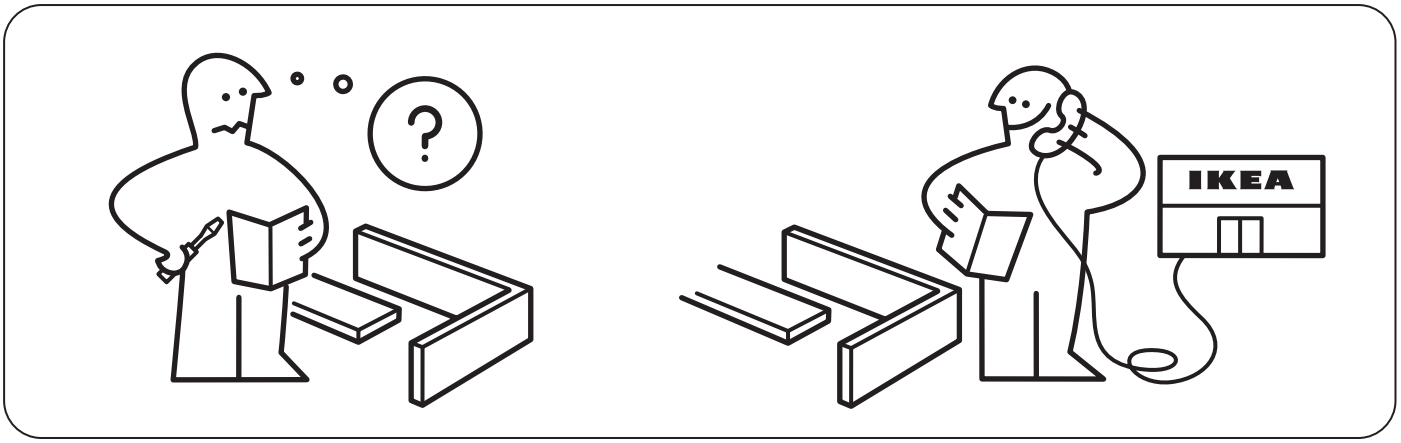
?
IKEA

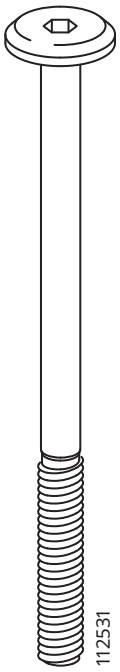


20x

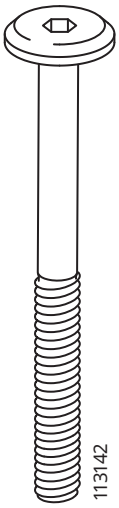


8x

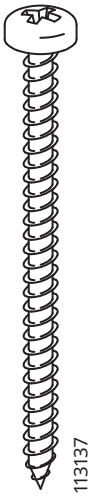


4x

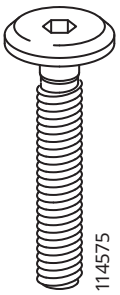


4x




3x

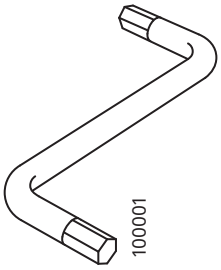


1x




22x




3x

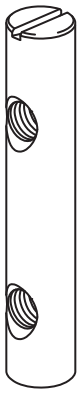


4x

# 1

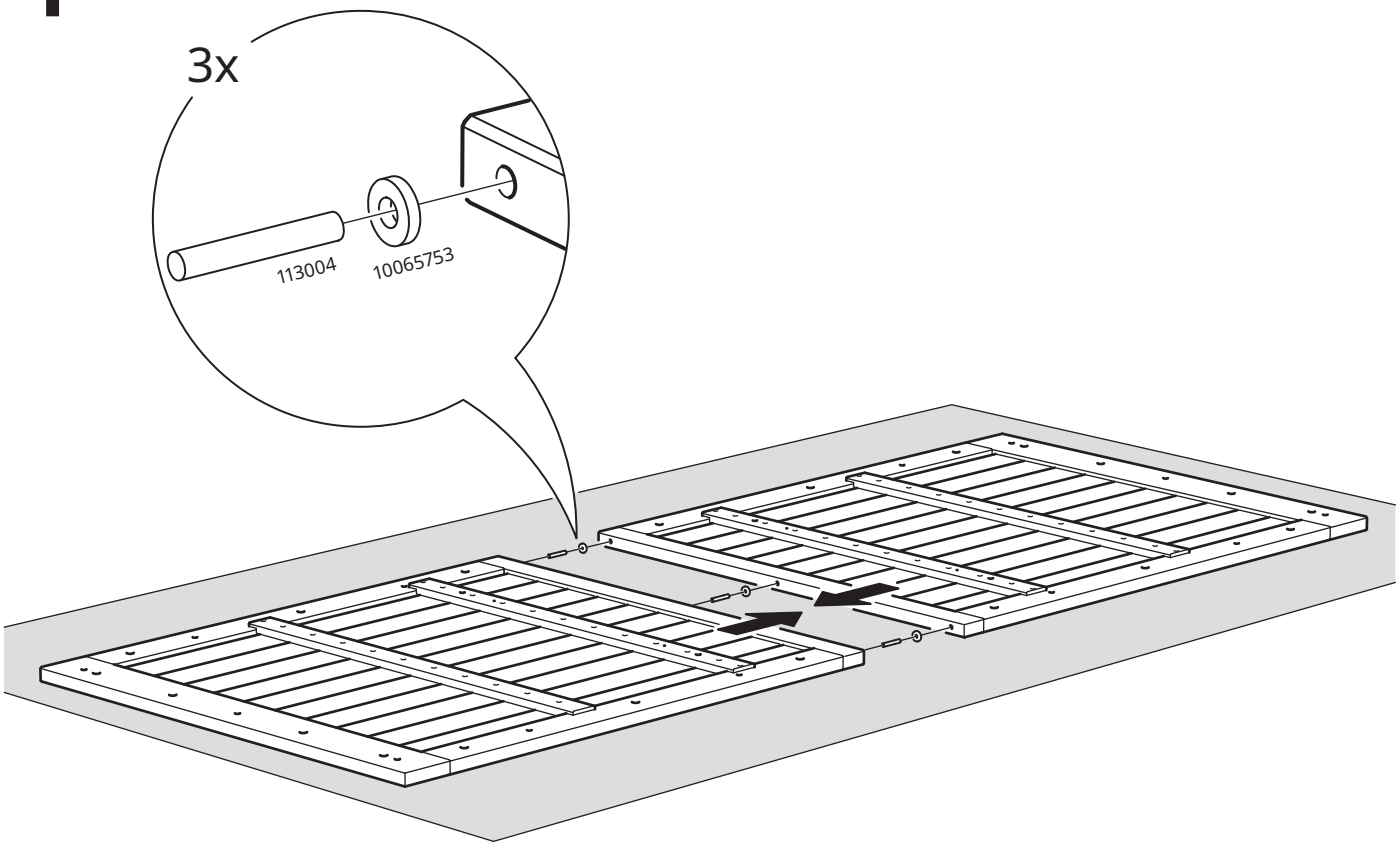


# 2

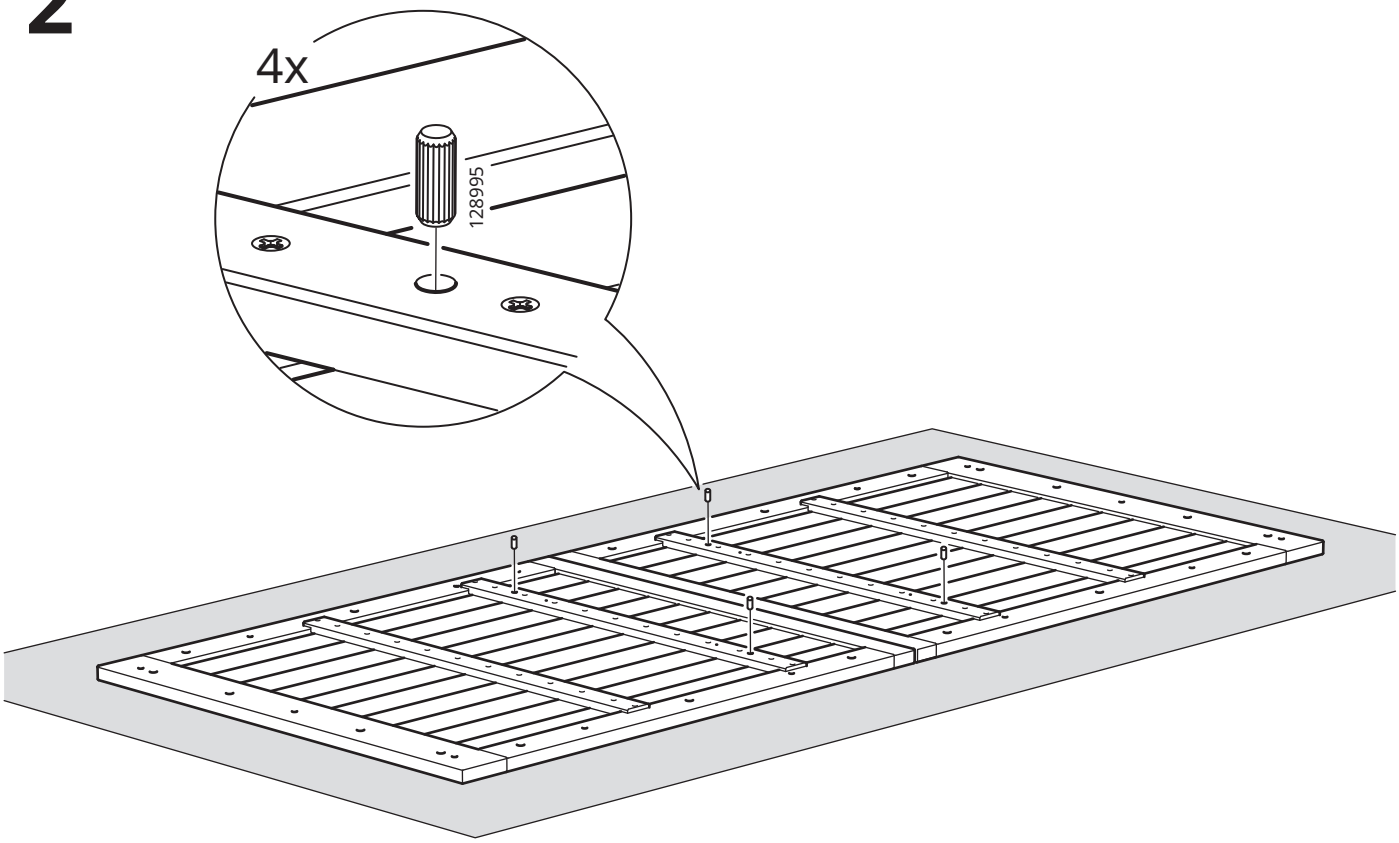

# 3

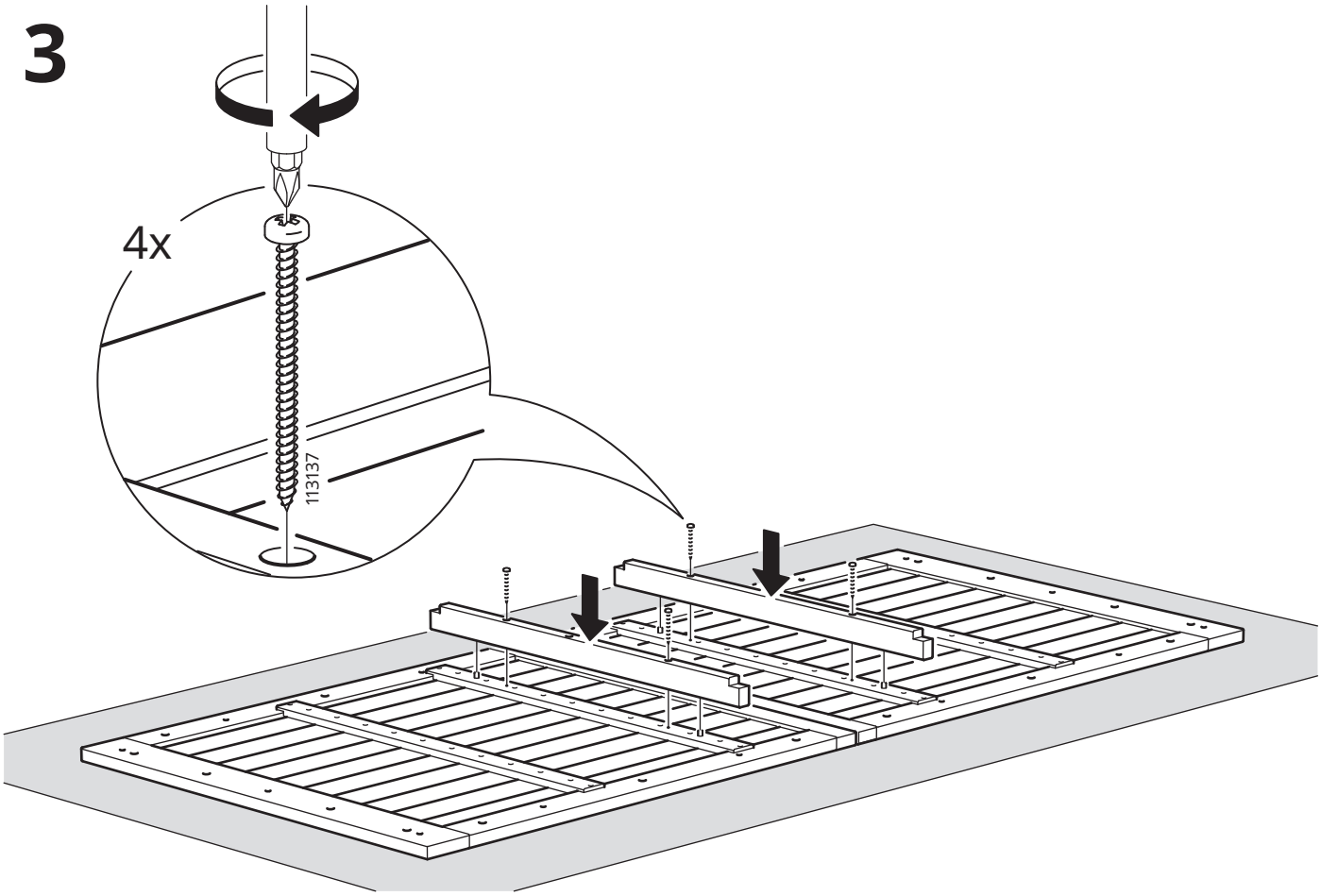


# 4

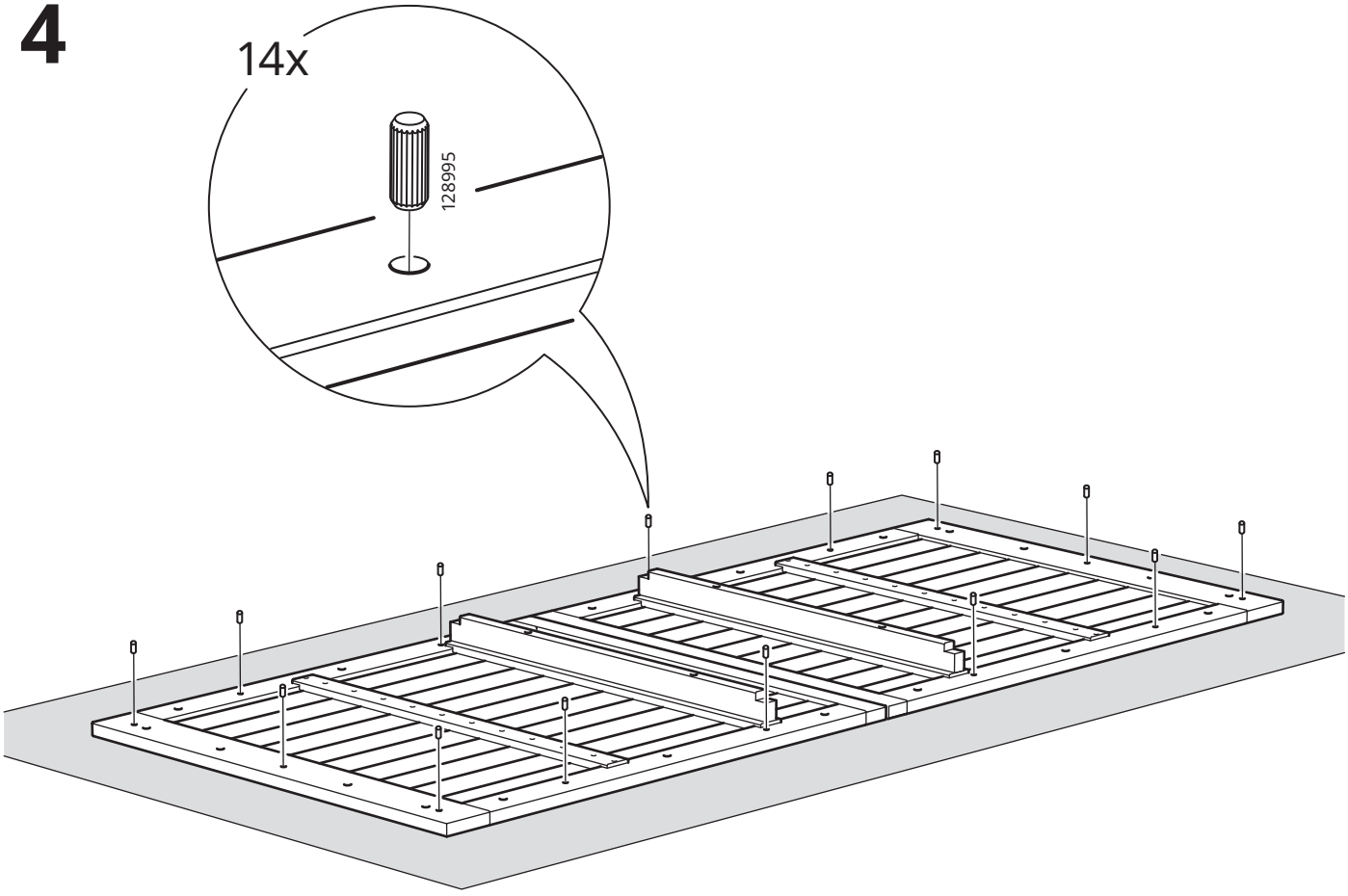

# 5

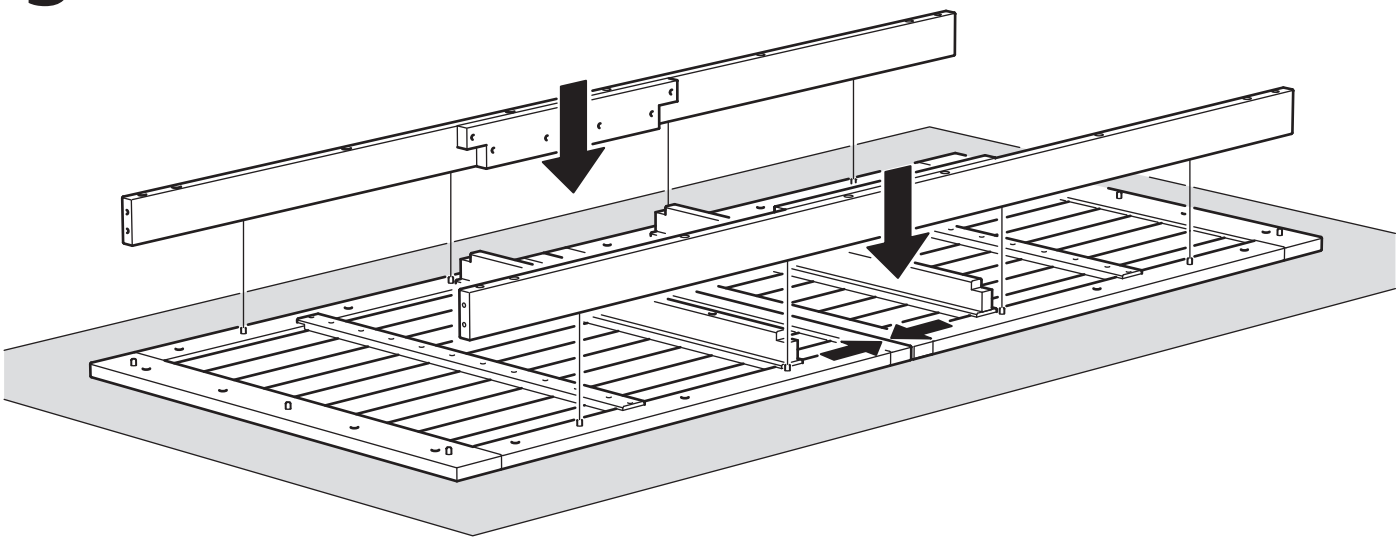

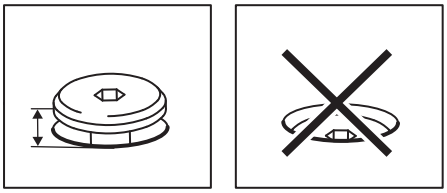

# 6

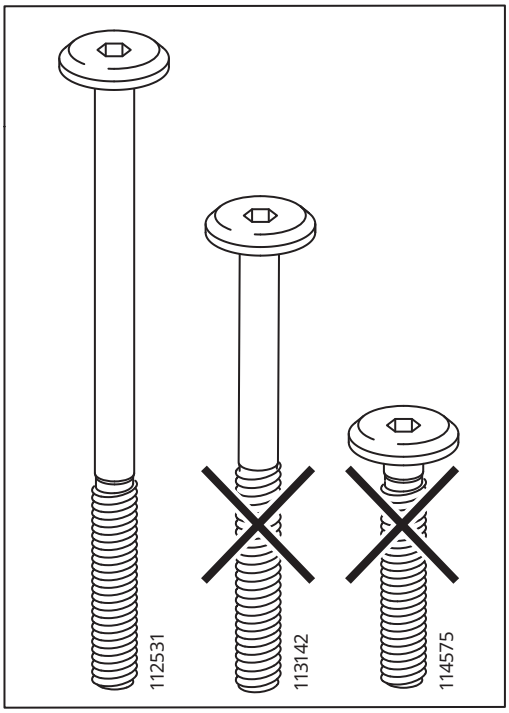


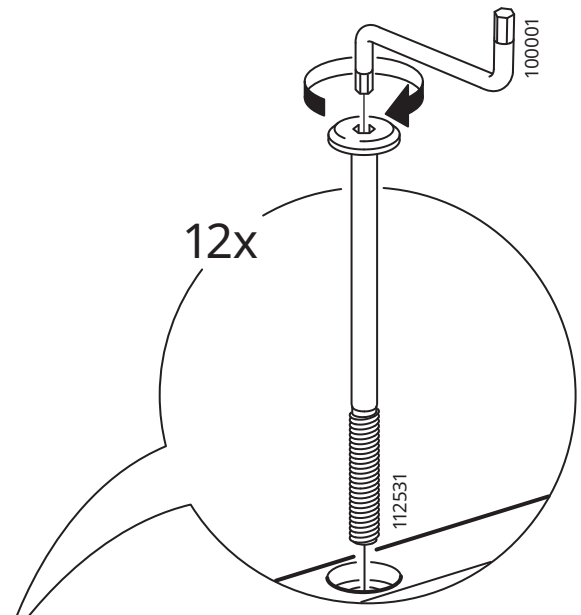


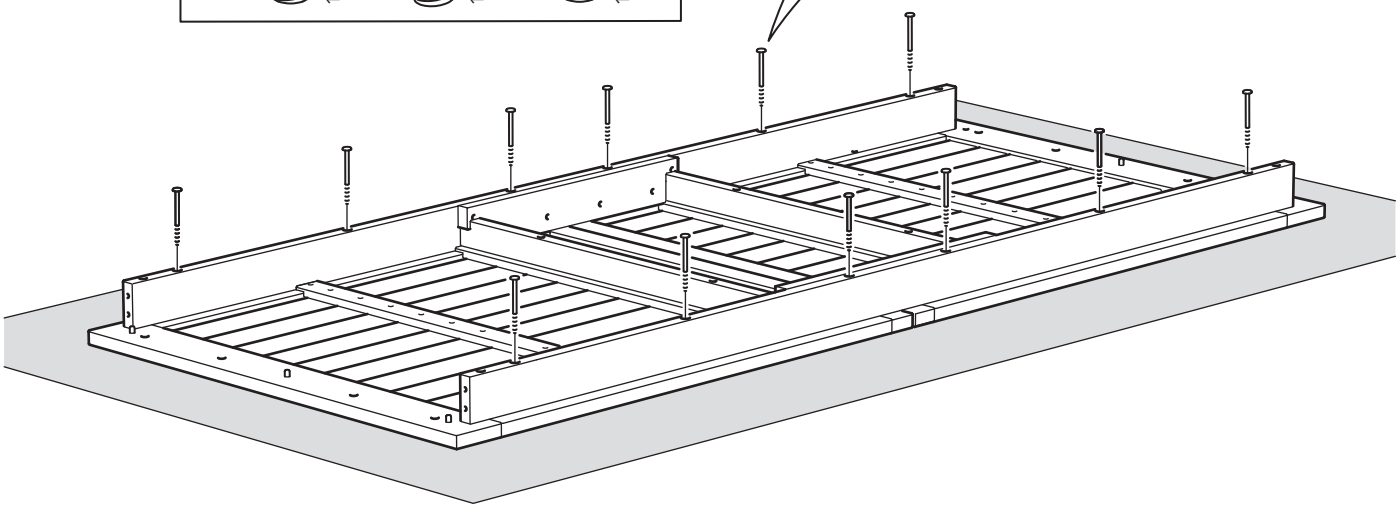

# 7

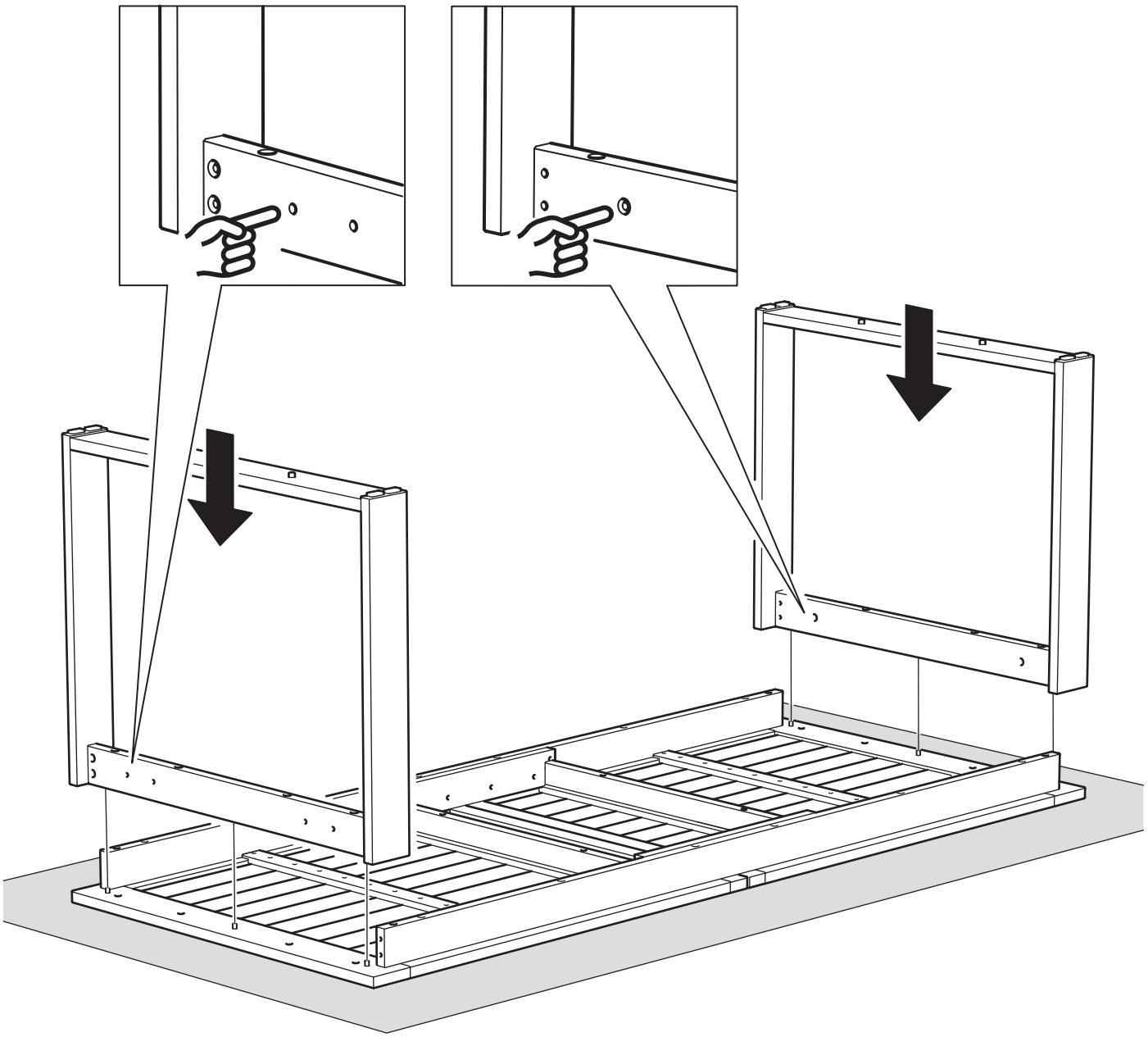

# 8

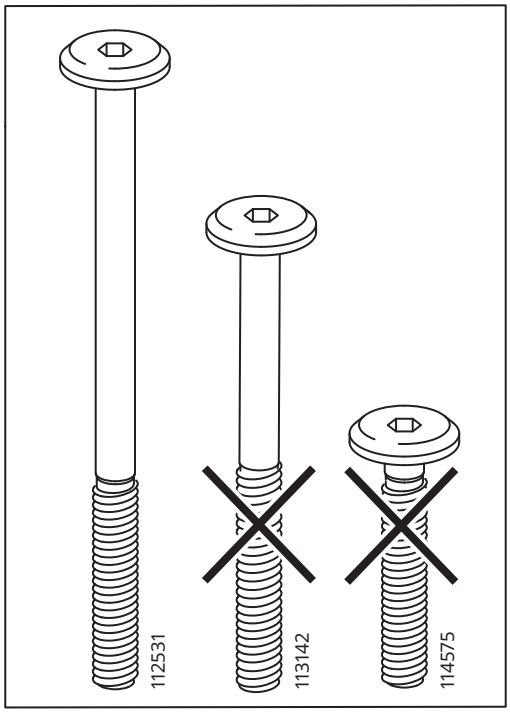


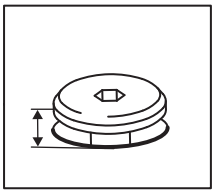

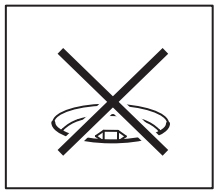

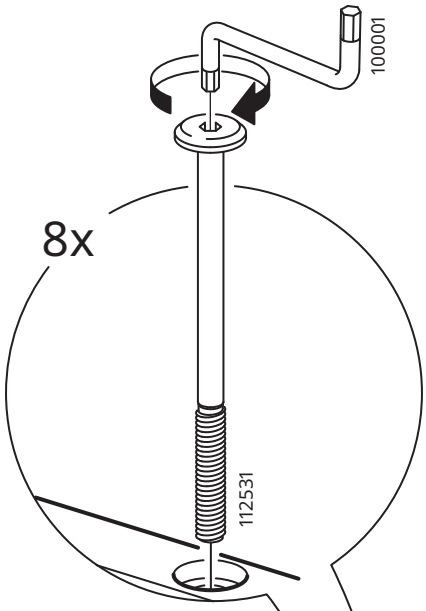


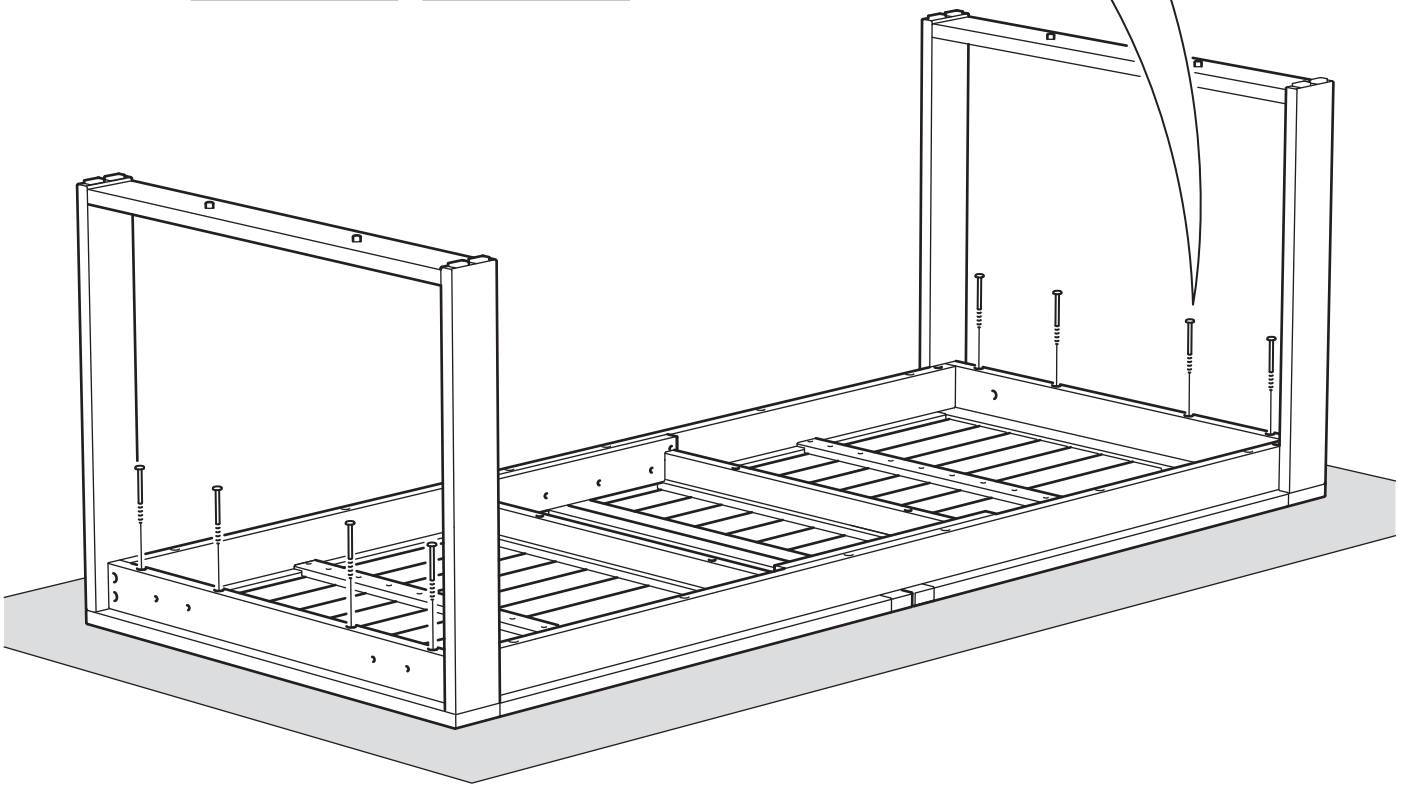

# 9

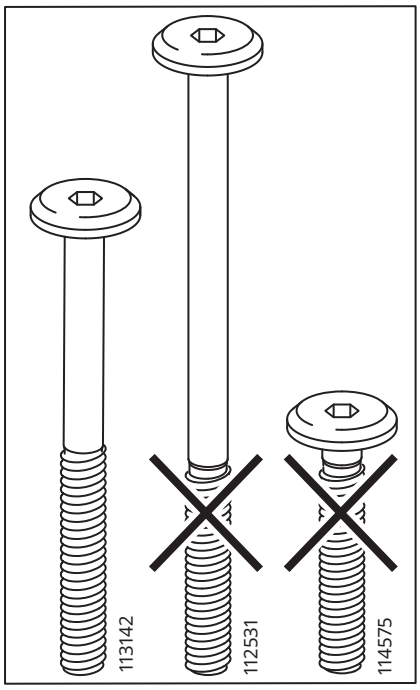


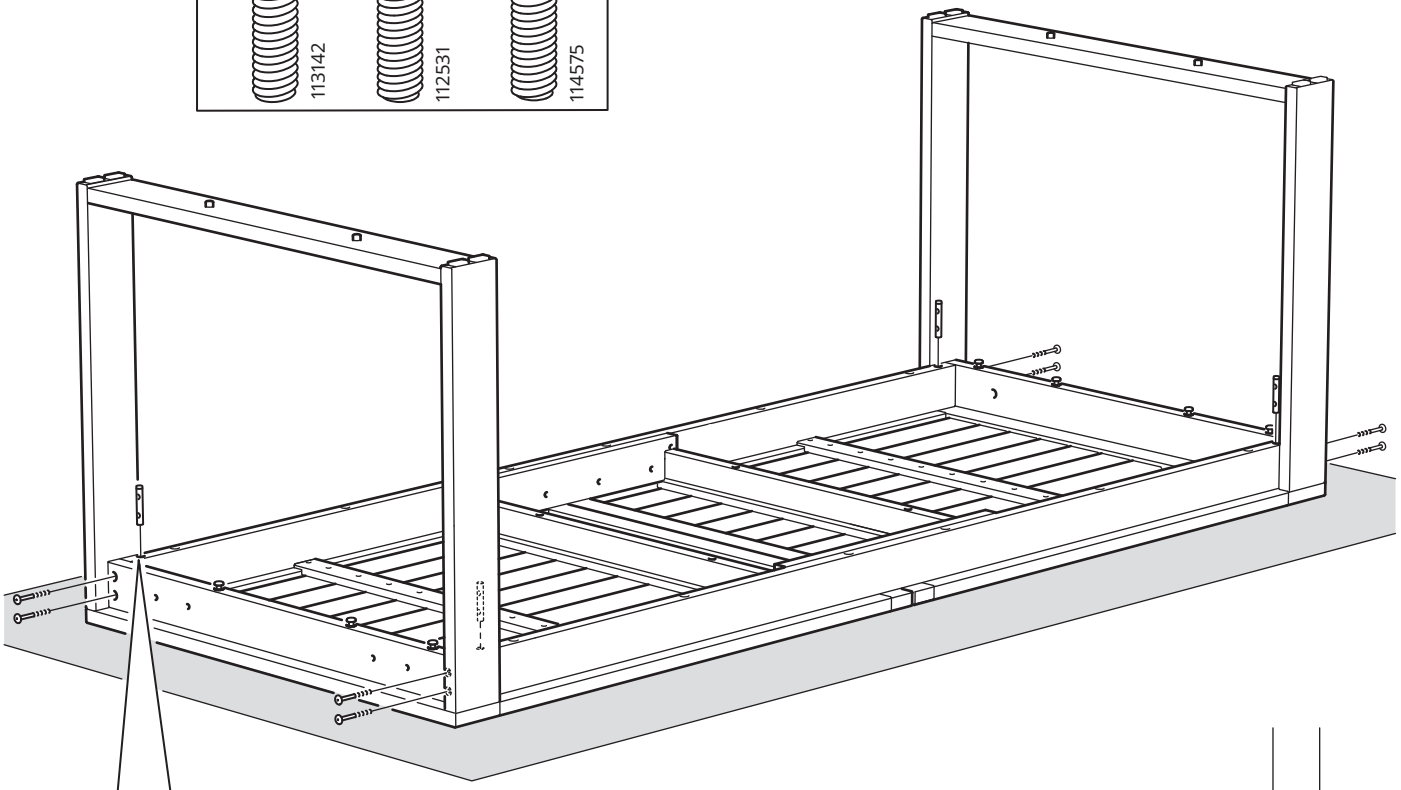

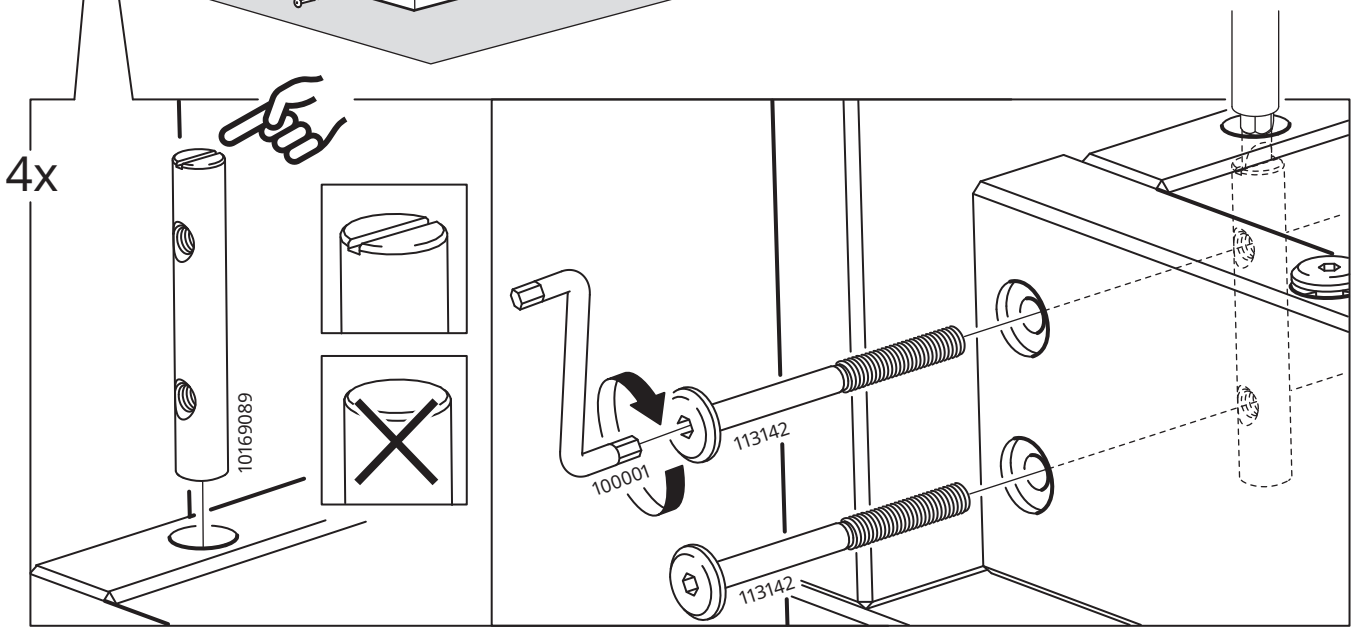

# 10

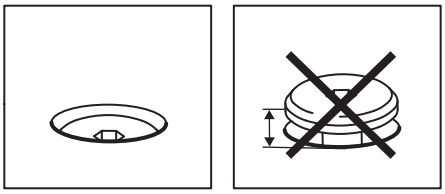

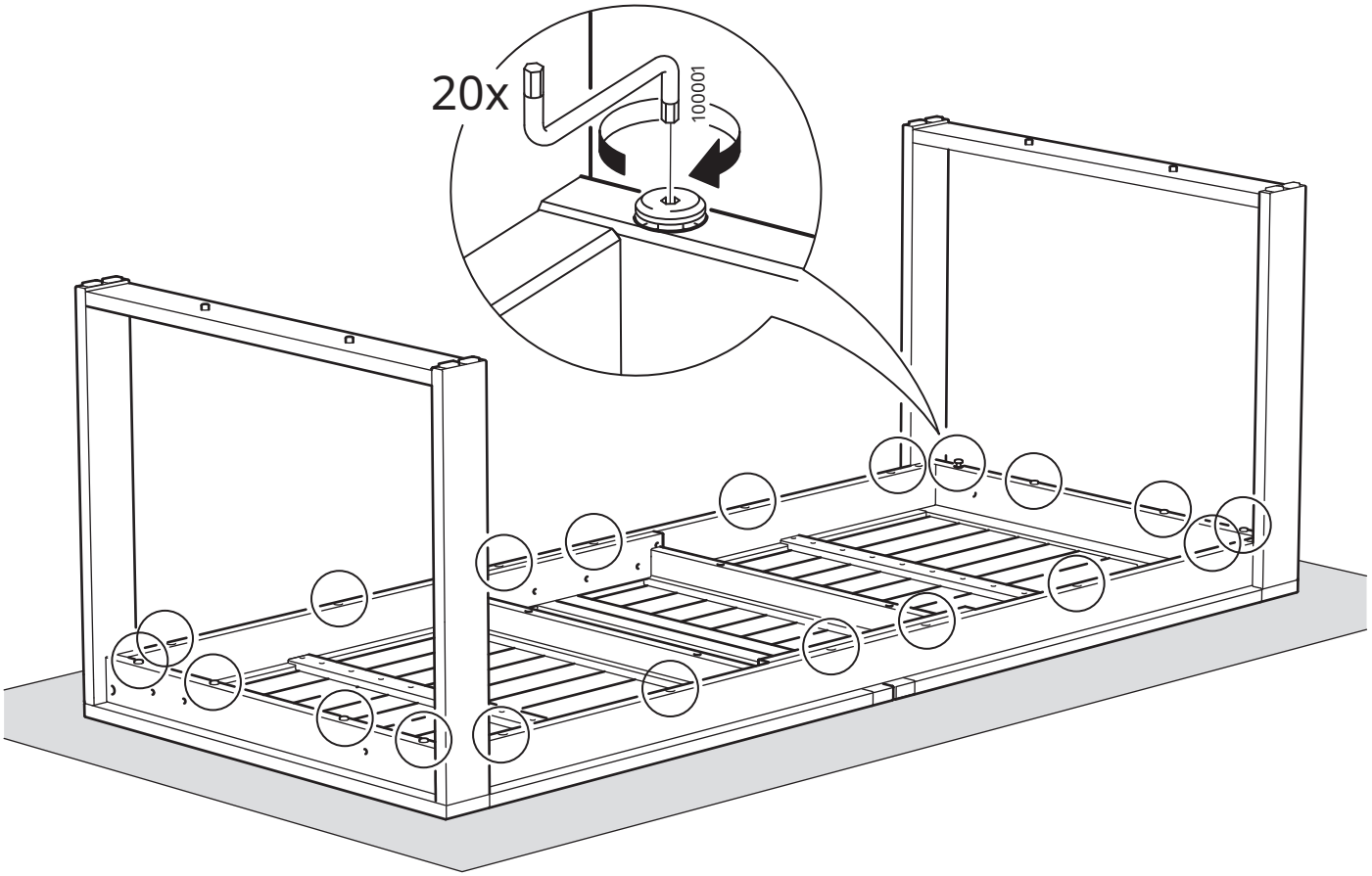


# 11

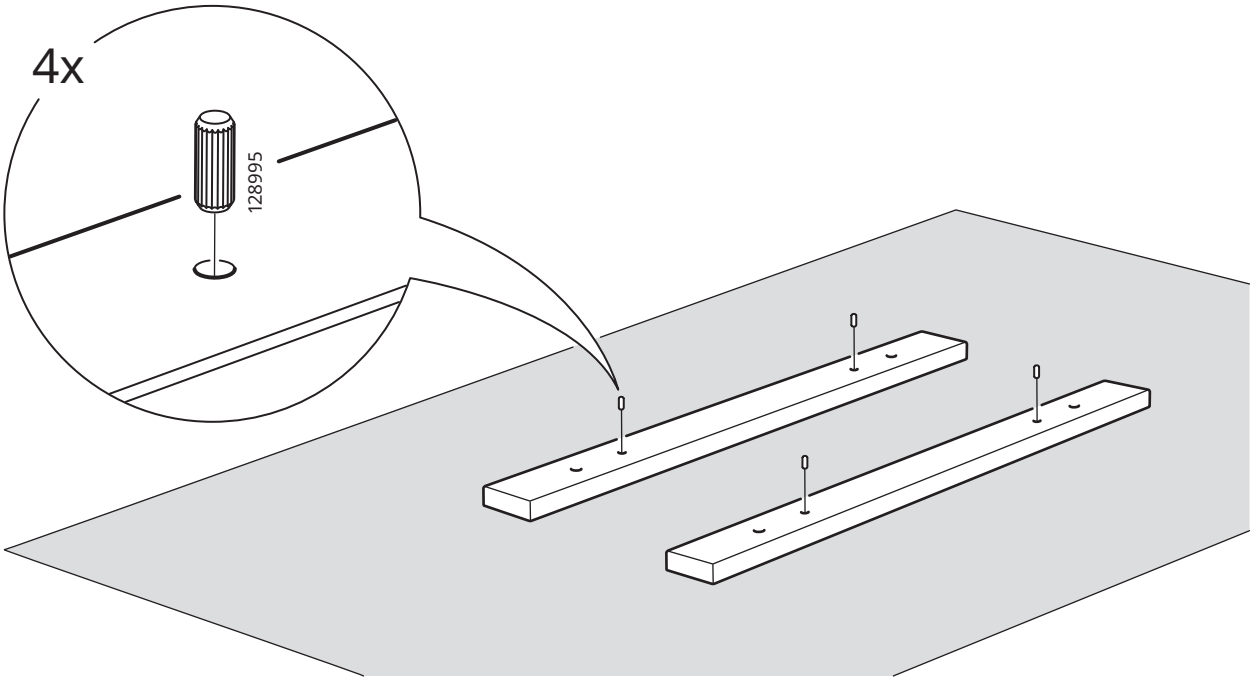

# 12

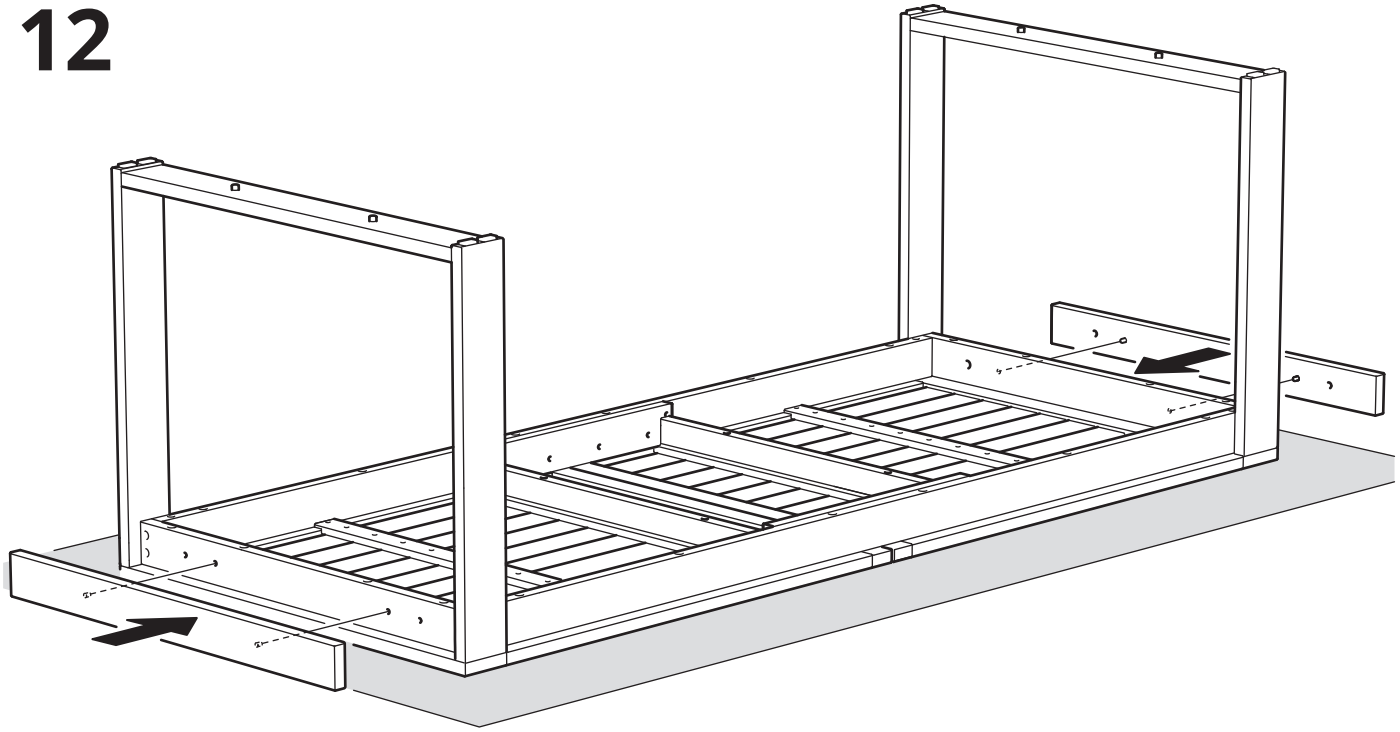

# 13

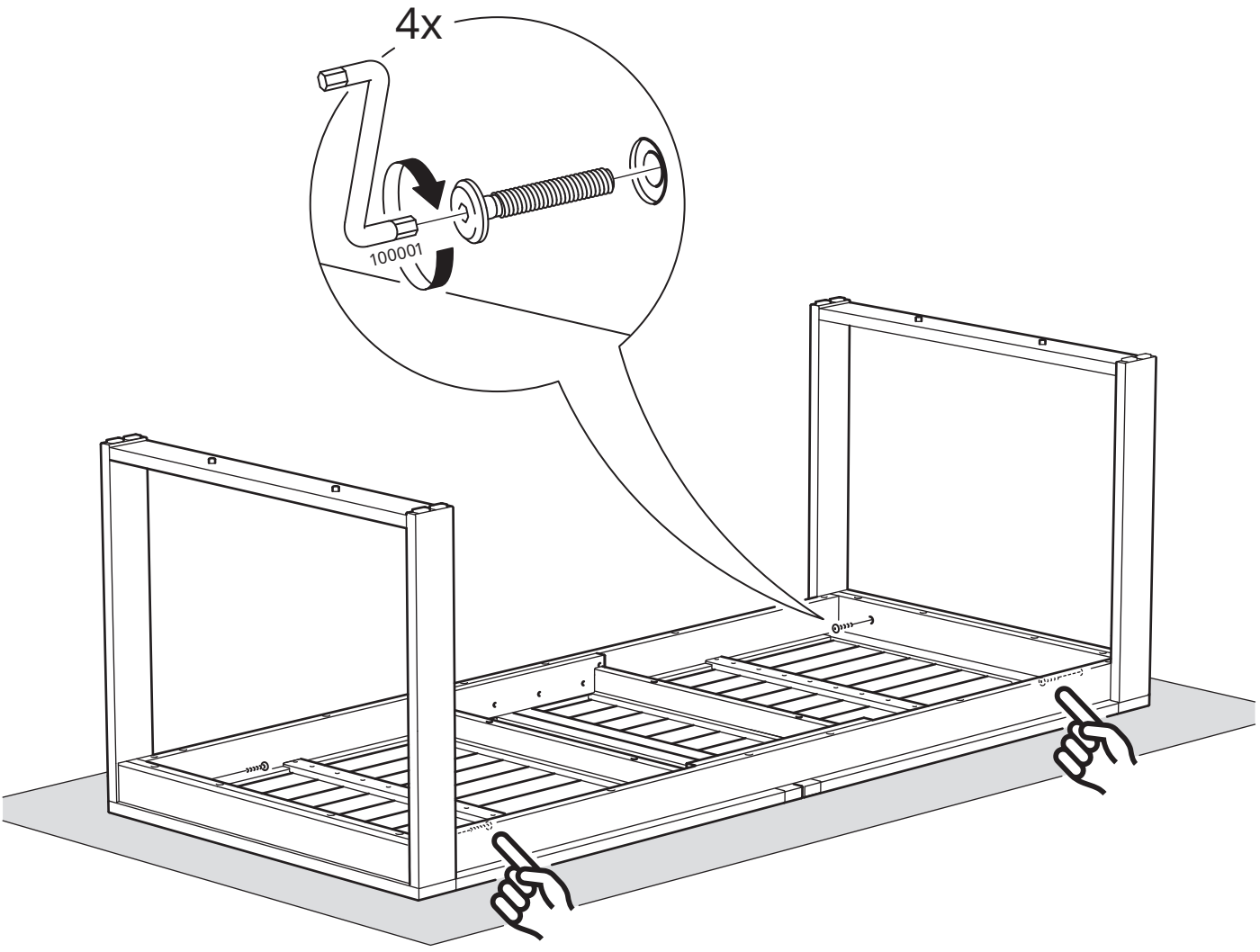

# 14

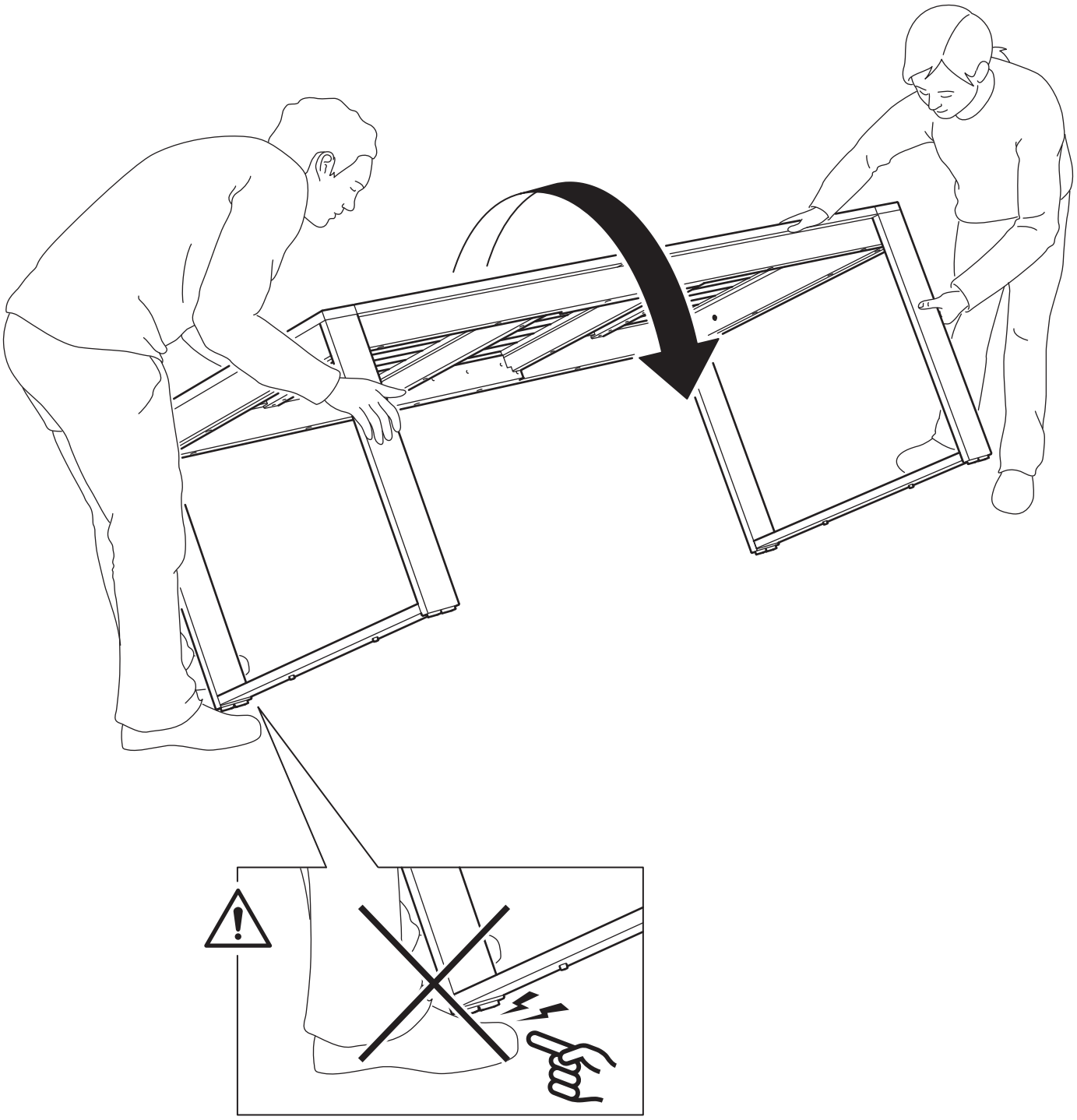


© Inter IKEA Systems B.V. 2025