FÅGLARÖ

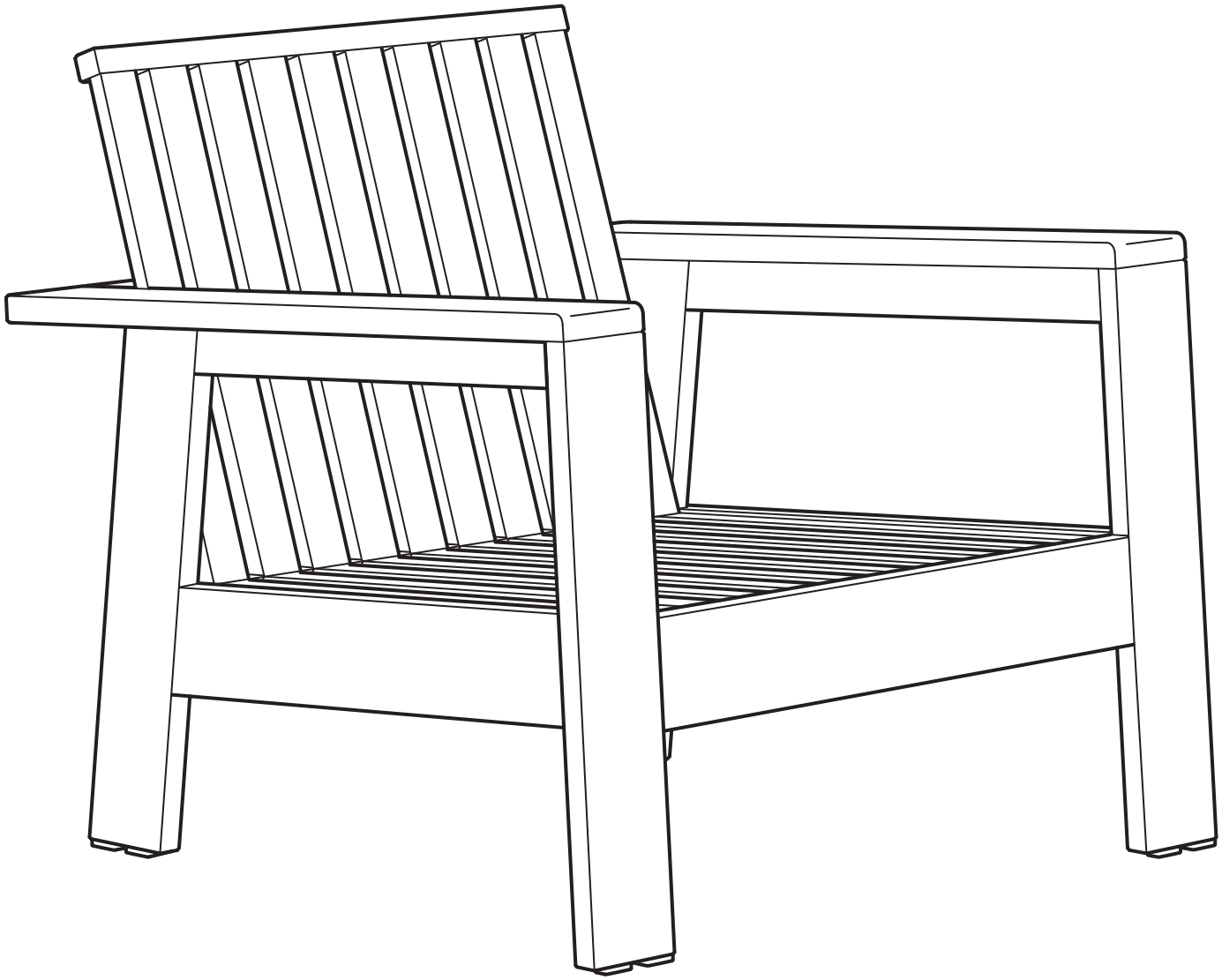

Design and Quality
IKEA of Sweden

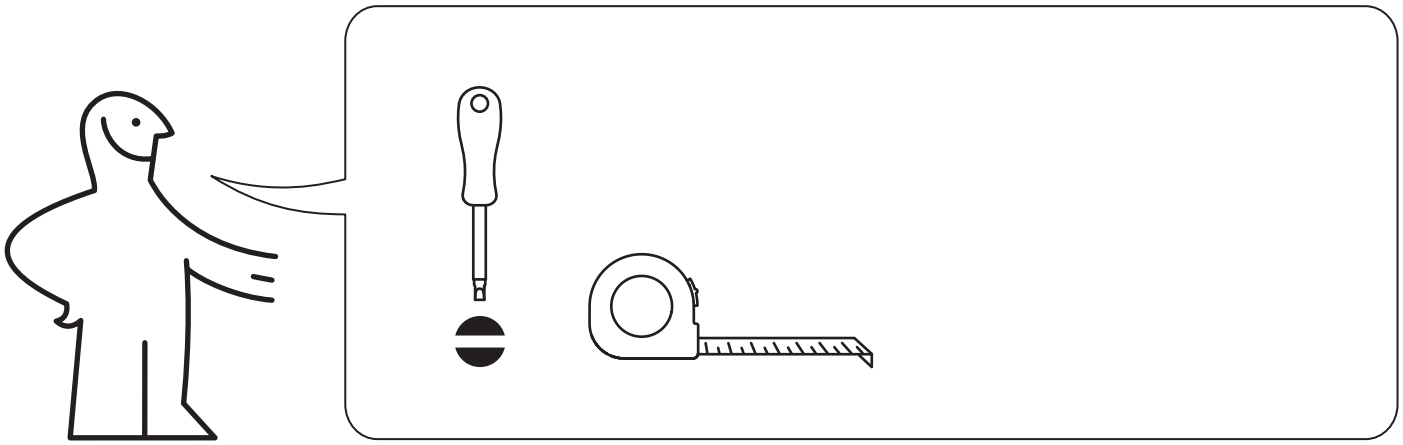

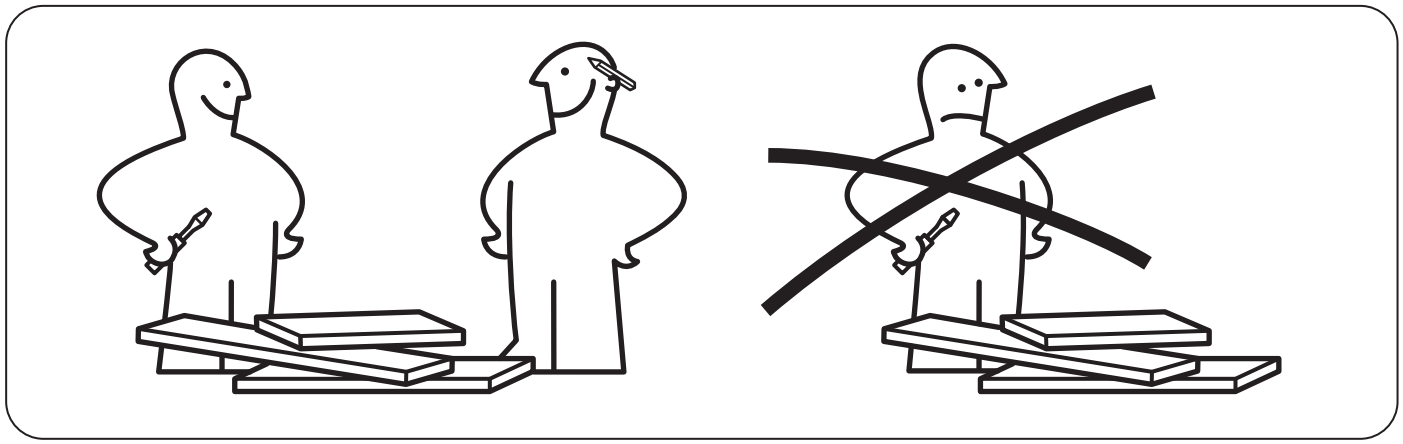

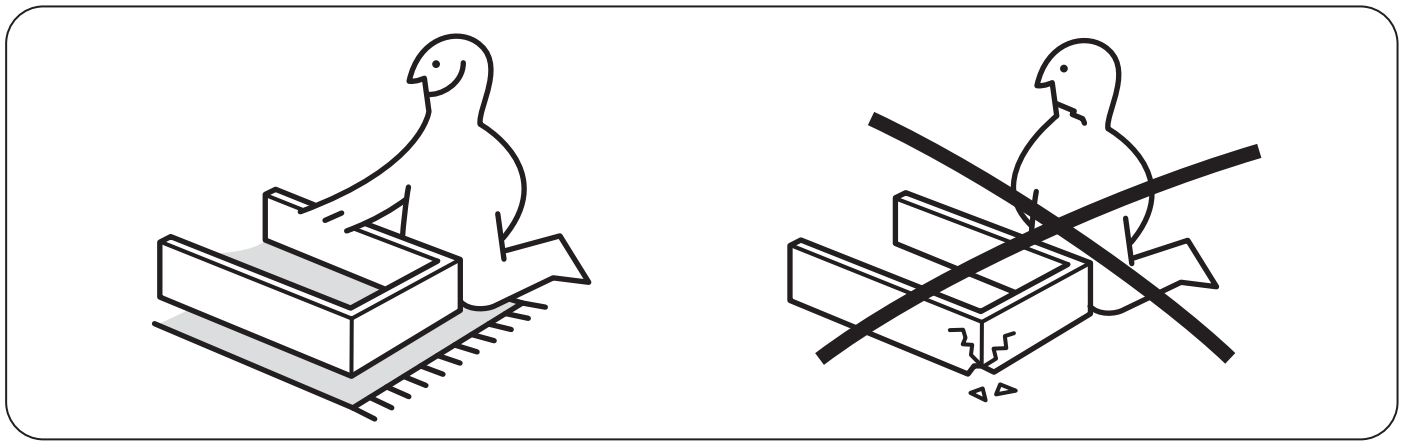

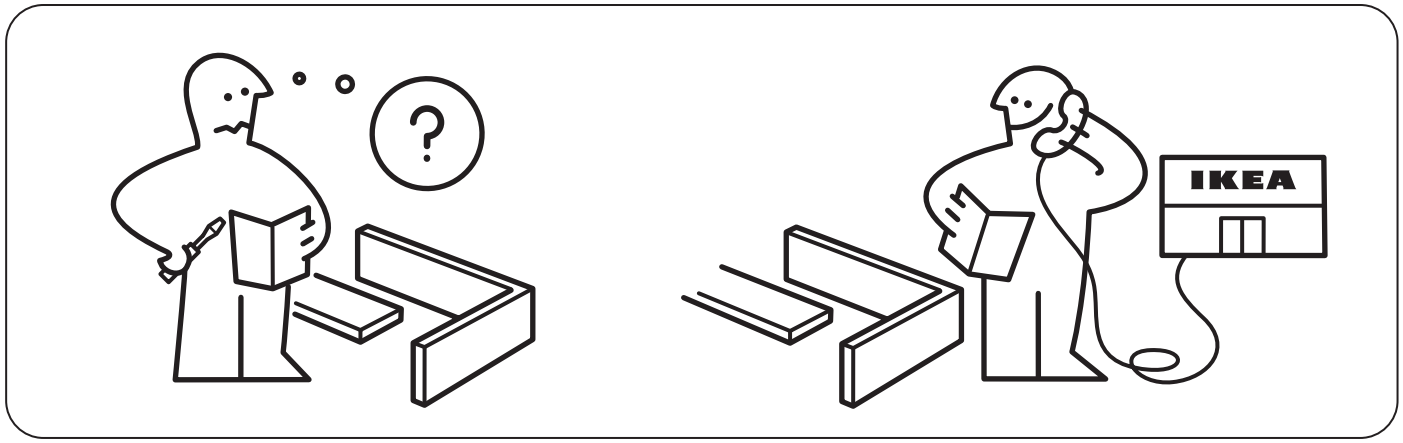
?
IKEA

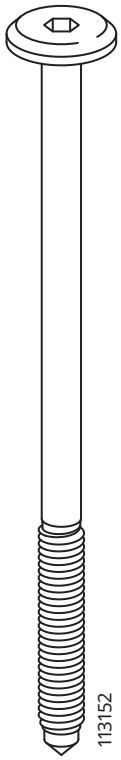

2x

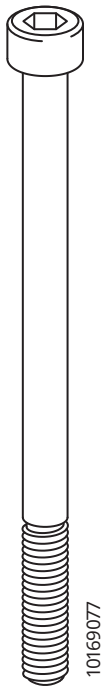

2x

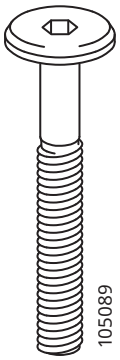

4x



12x

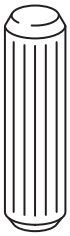

2x

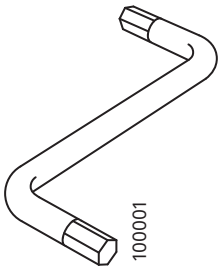

1x

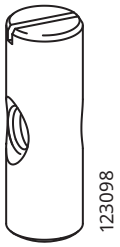

4x



2x



2x



4x

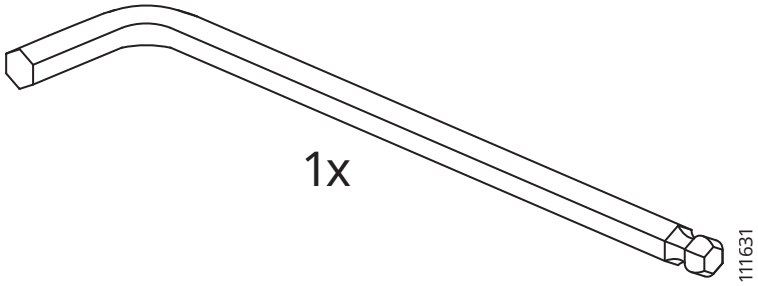

1x

1

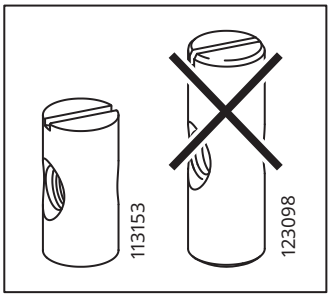
113153
123098

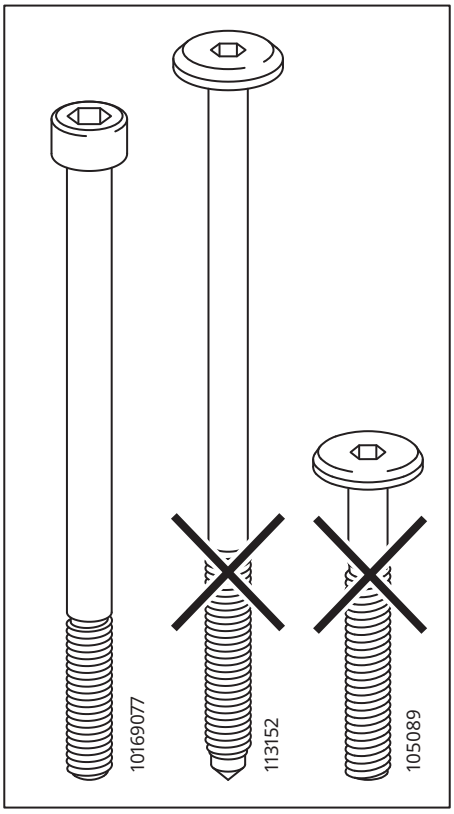
1016077
113152
105089

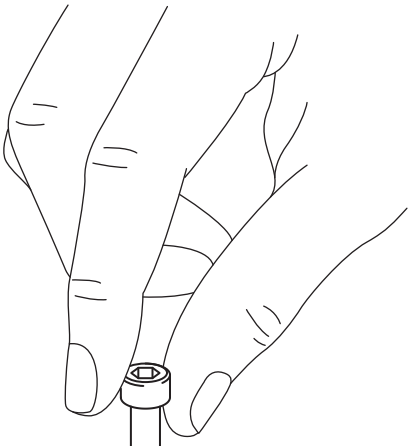

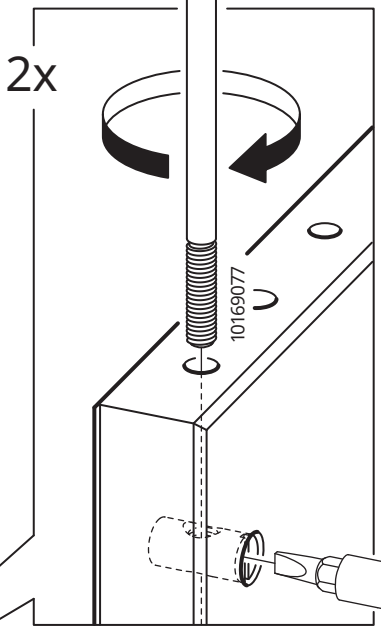
2x
10169077

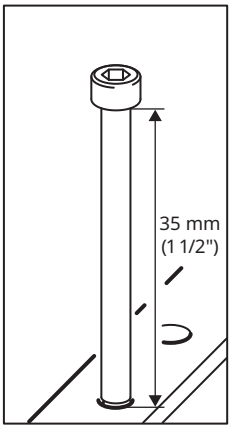
35 mm
(1 1/2")

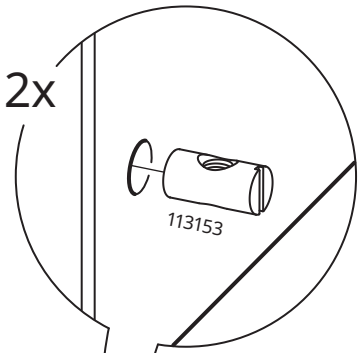
2x
113153

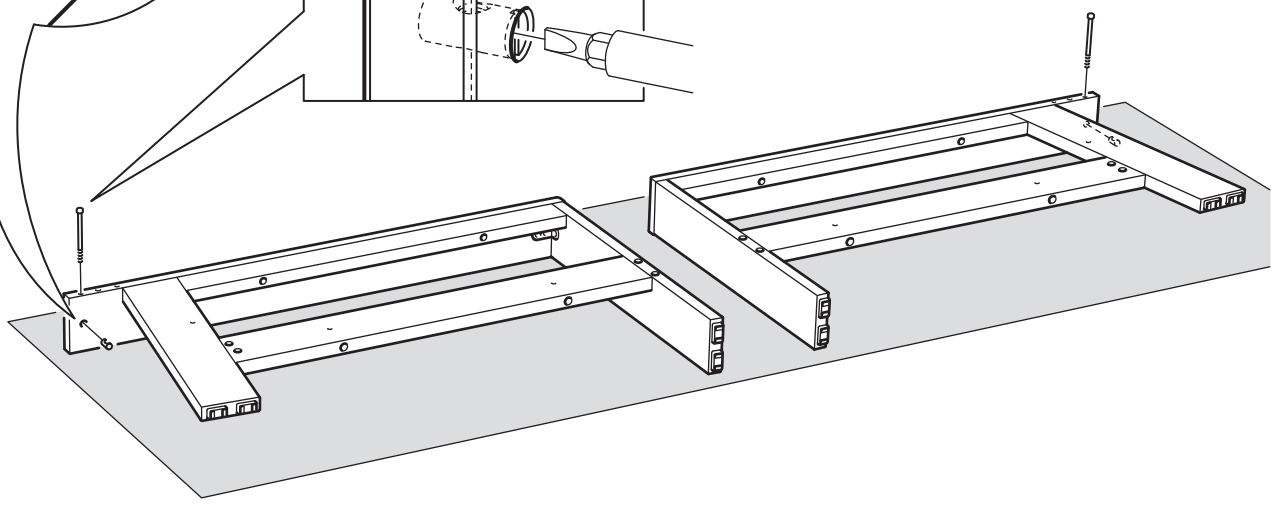

2

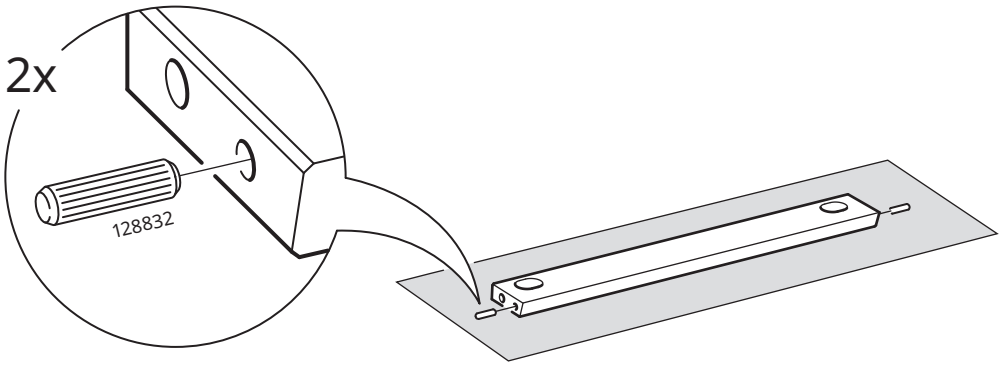

3

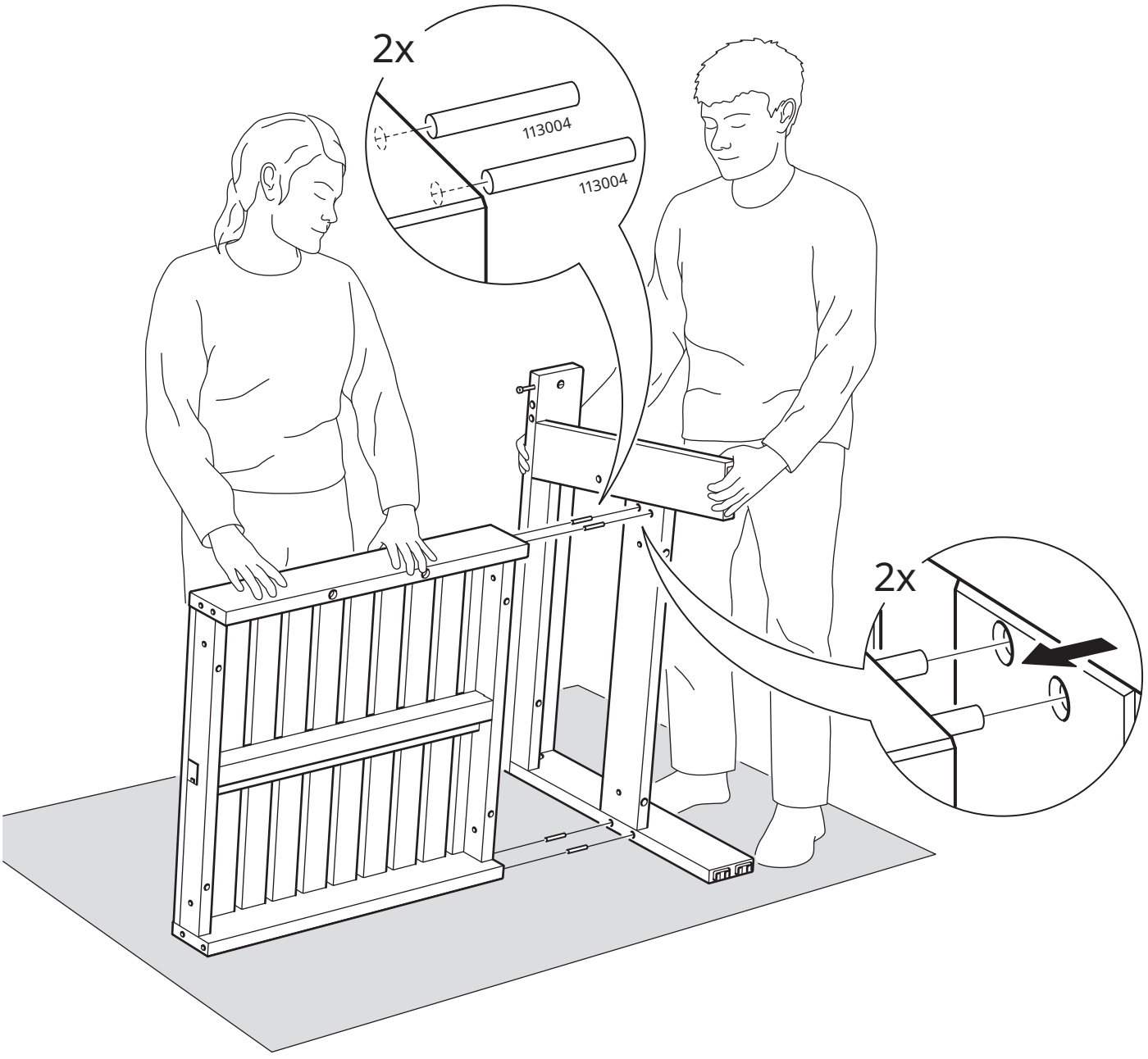

4

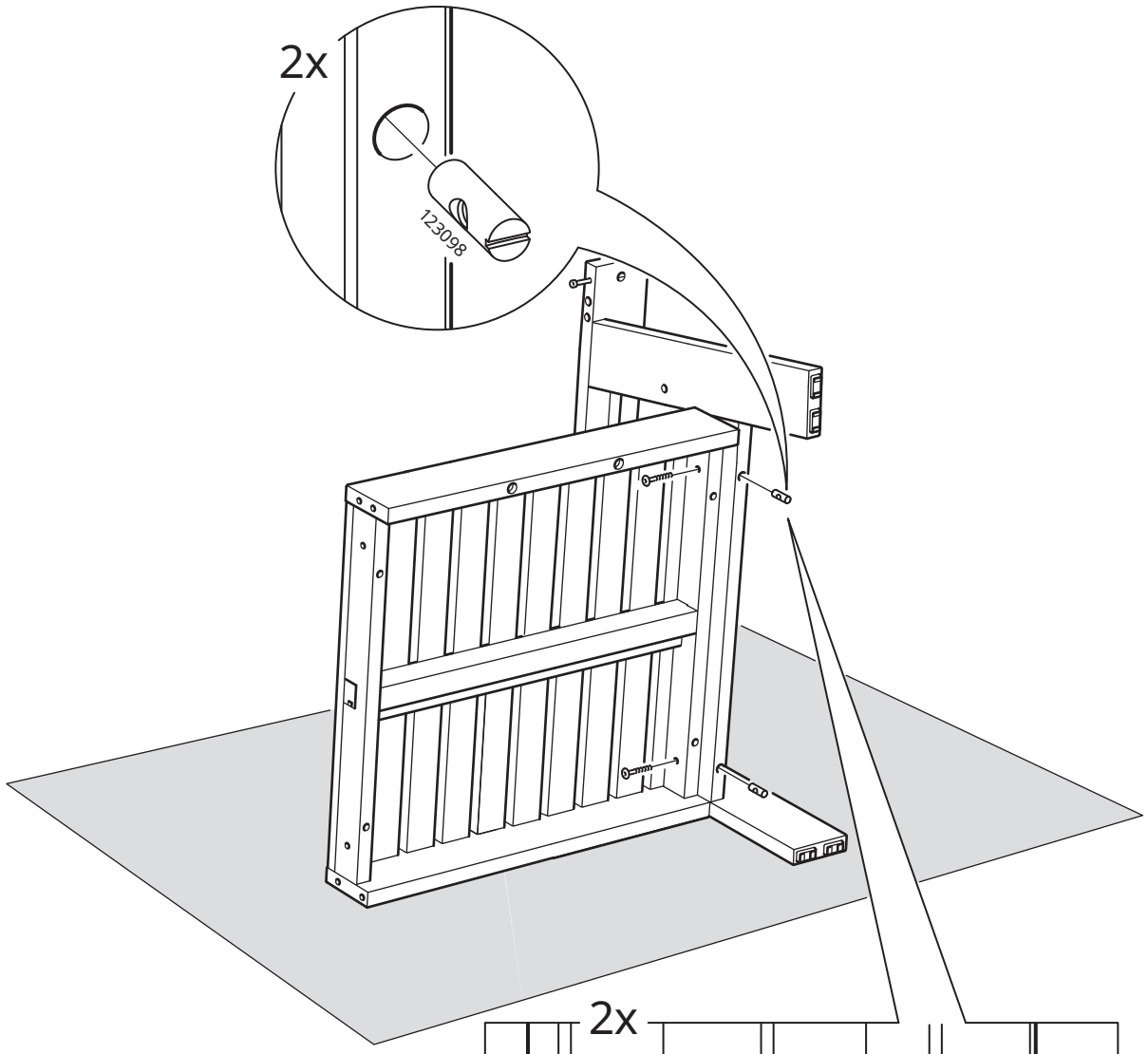

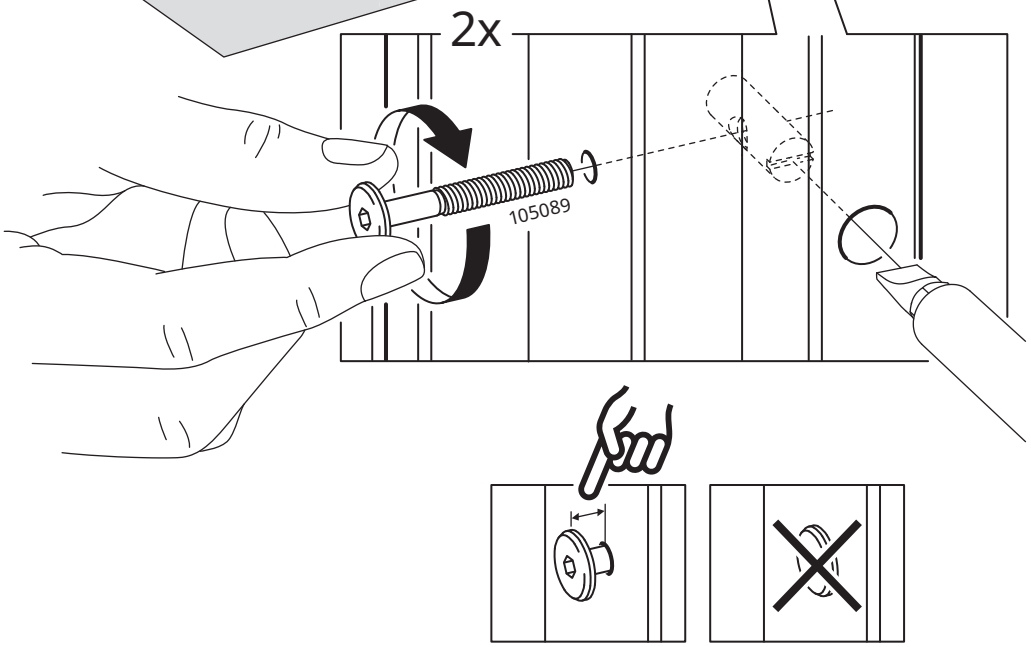

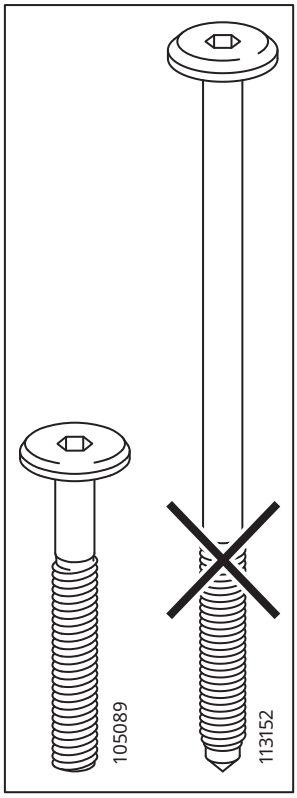

5

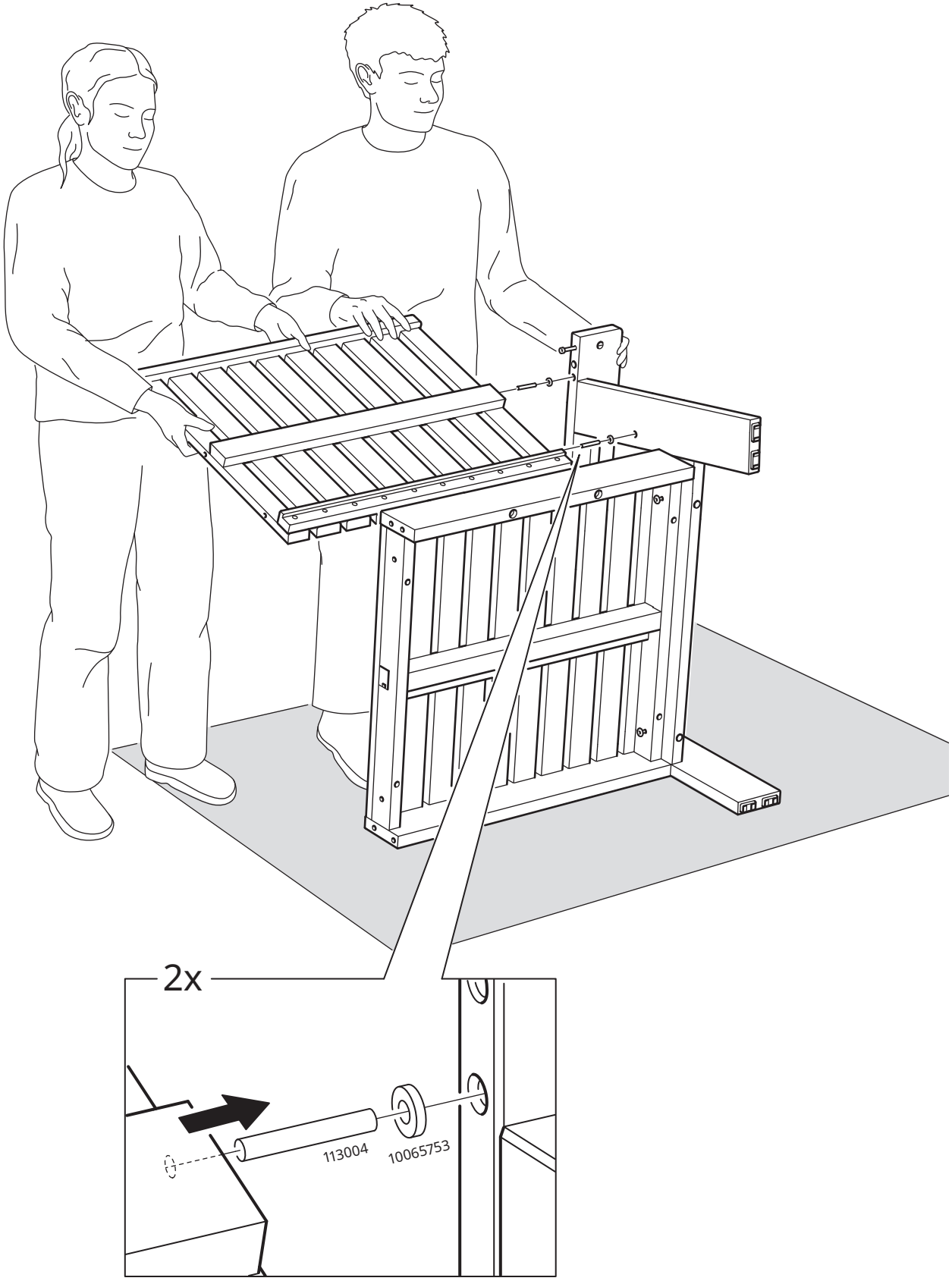

6

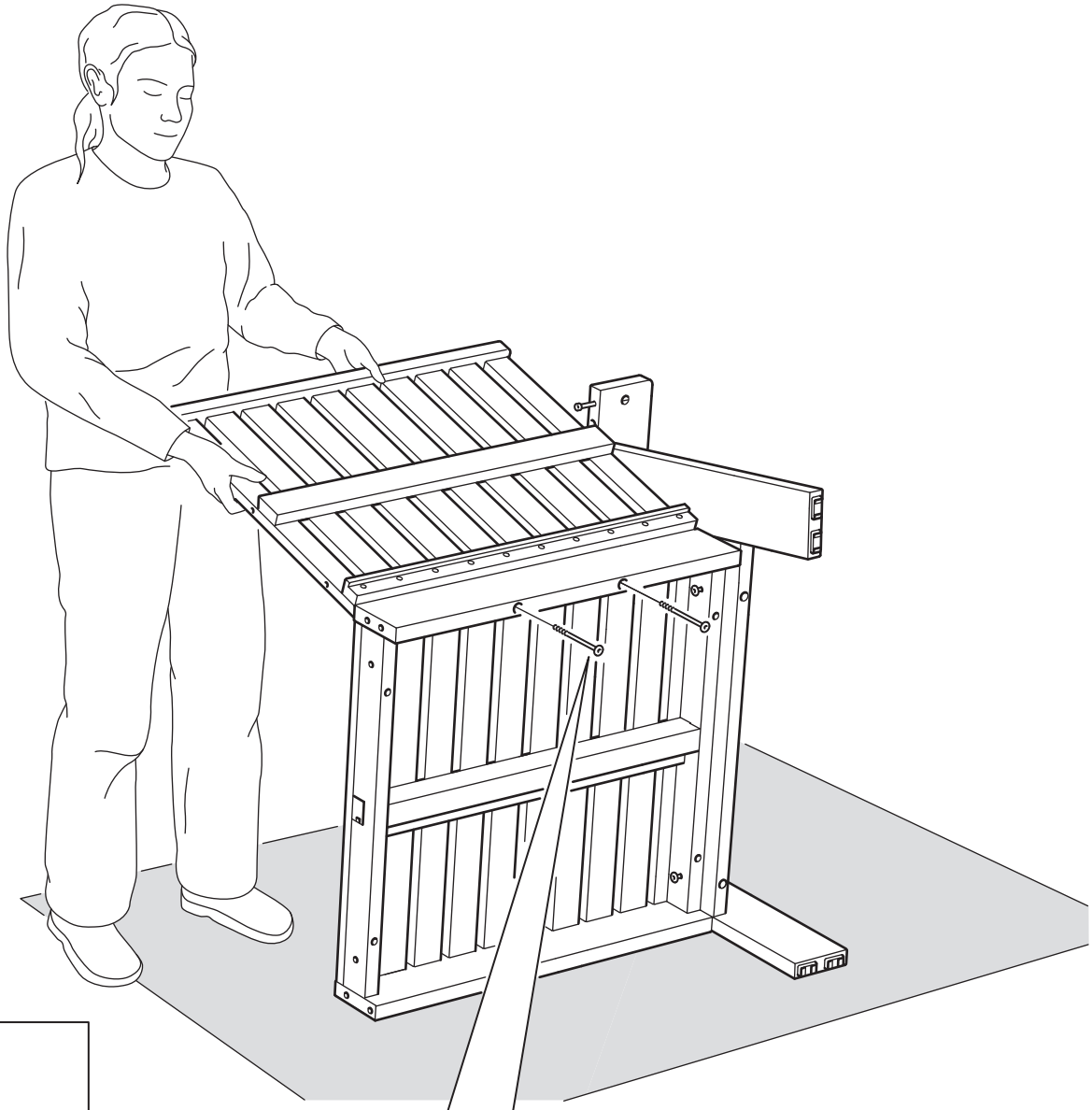

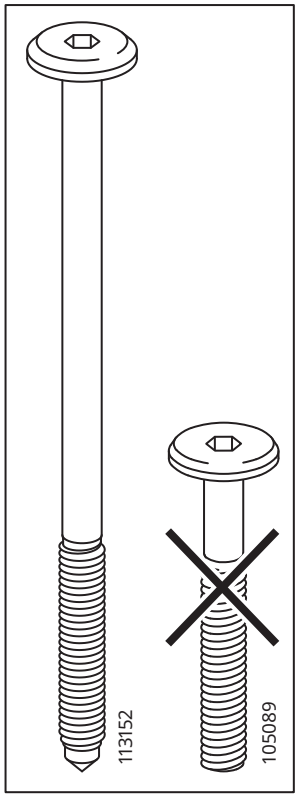

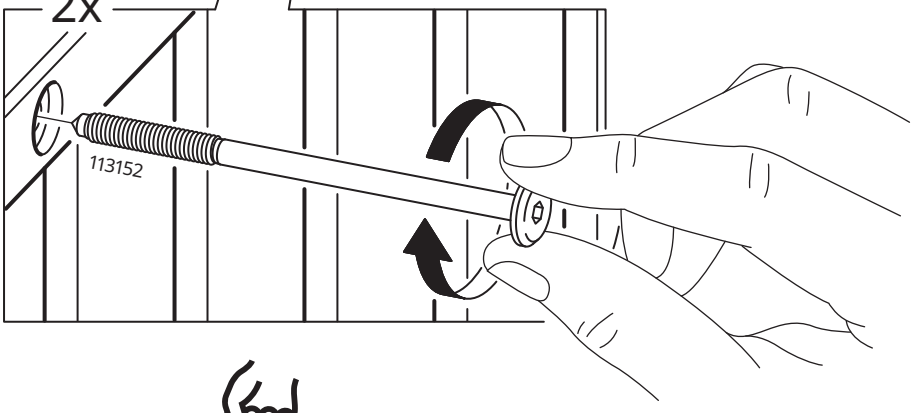

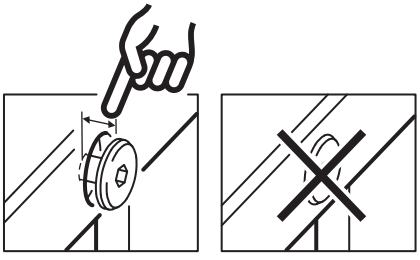

7

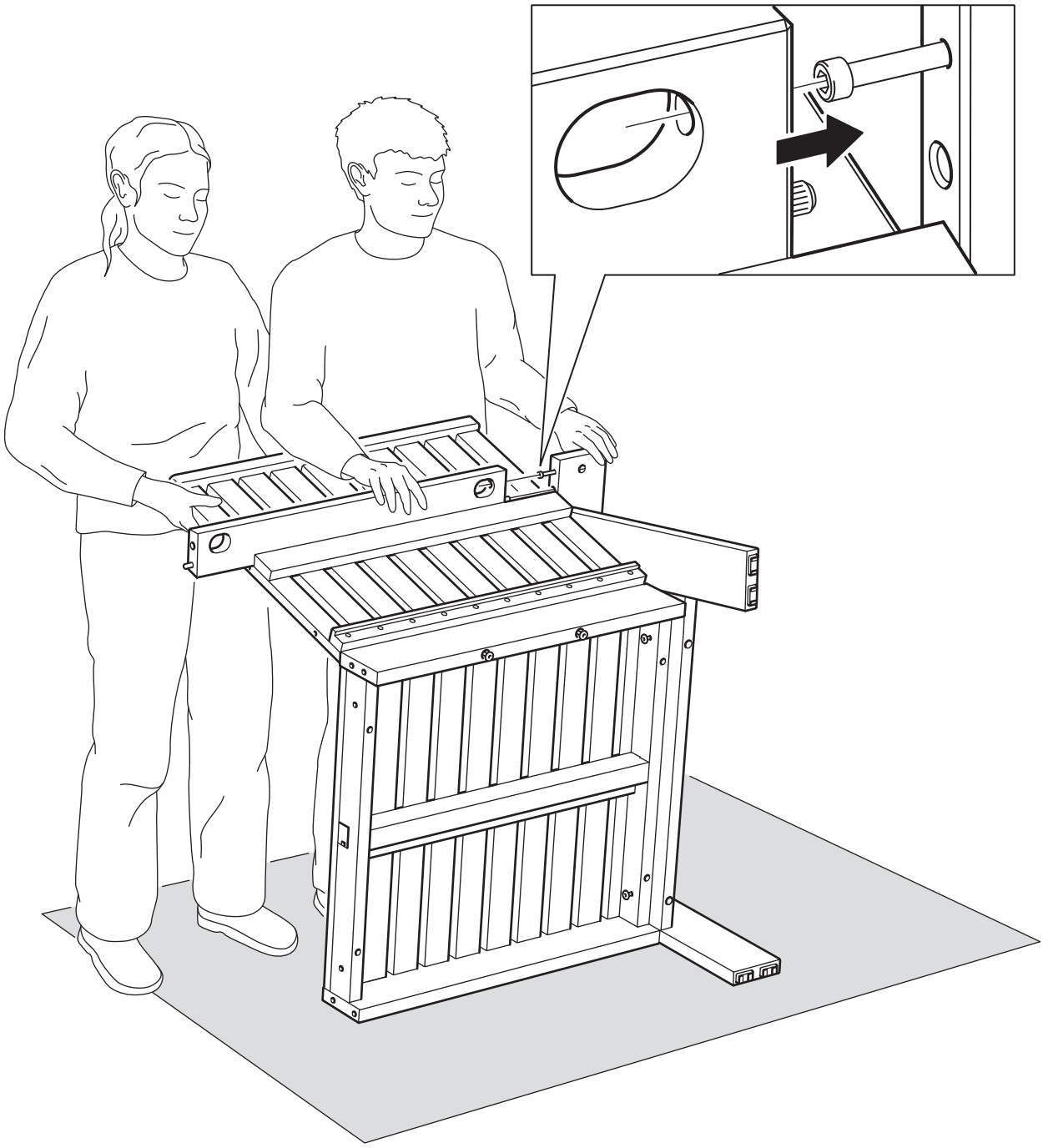

8

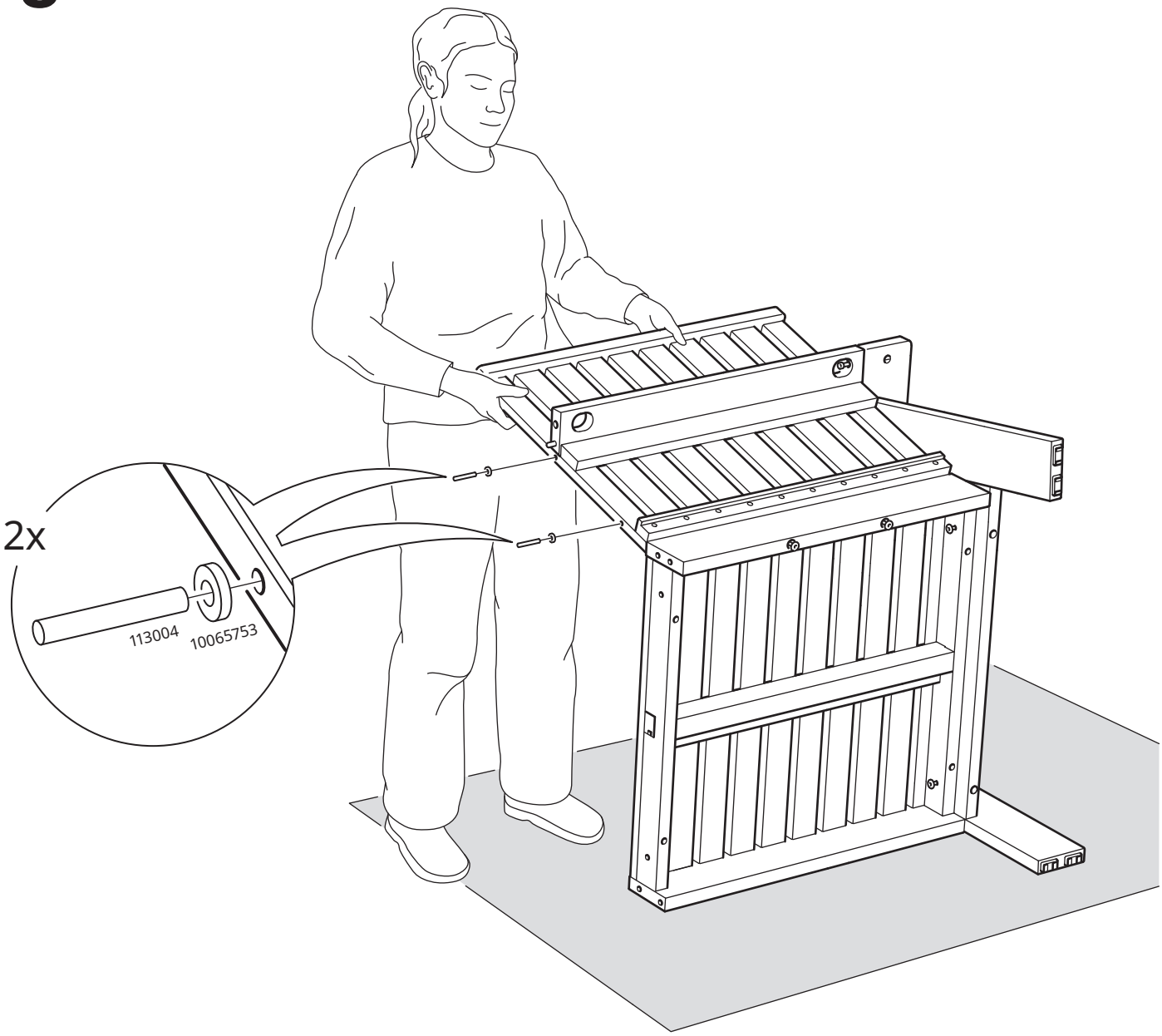

9

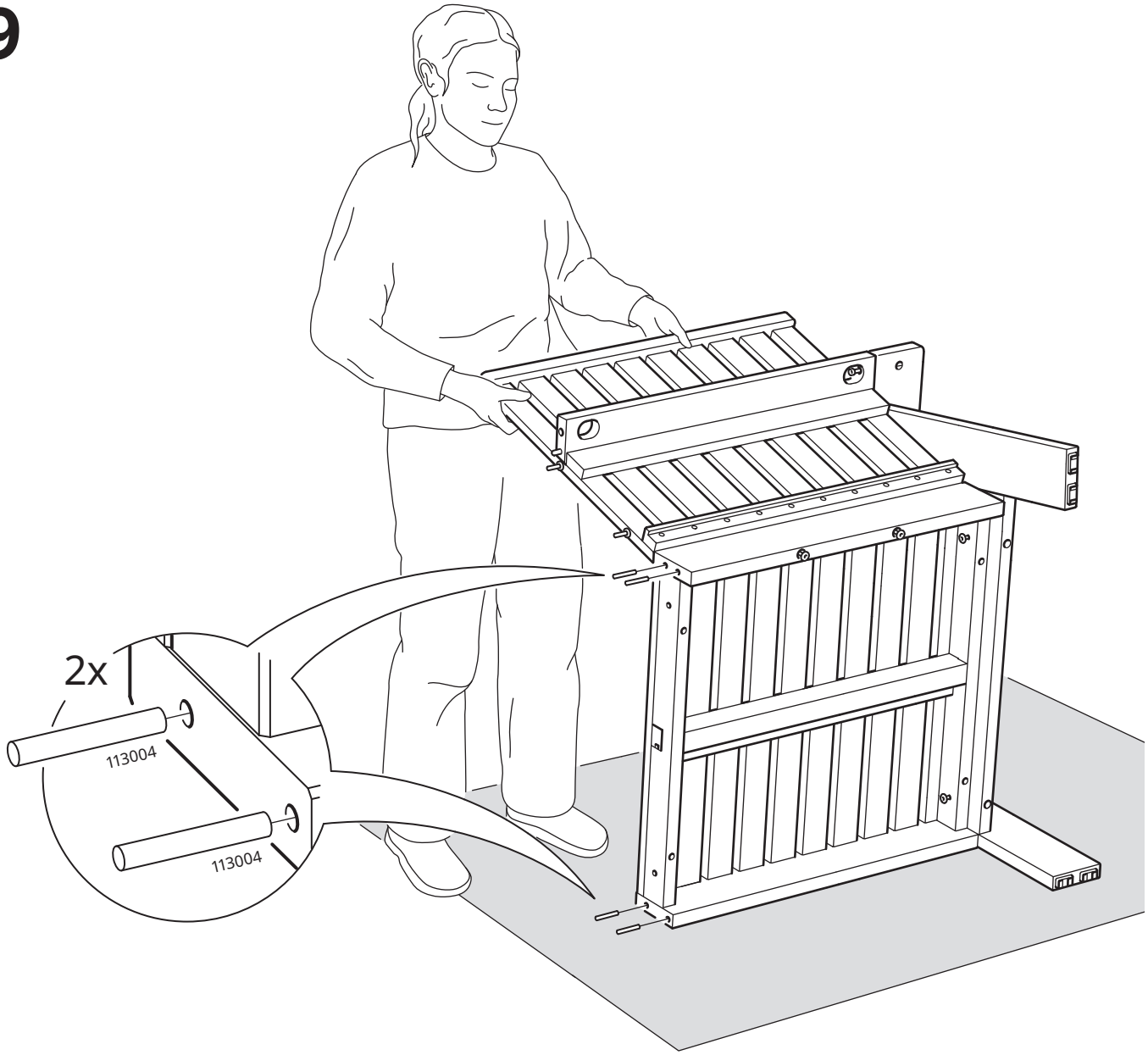

10

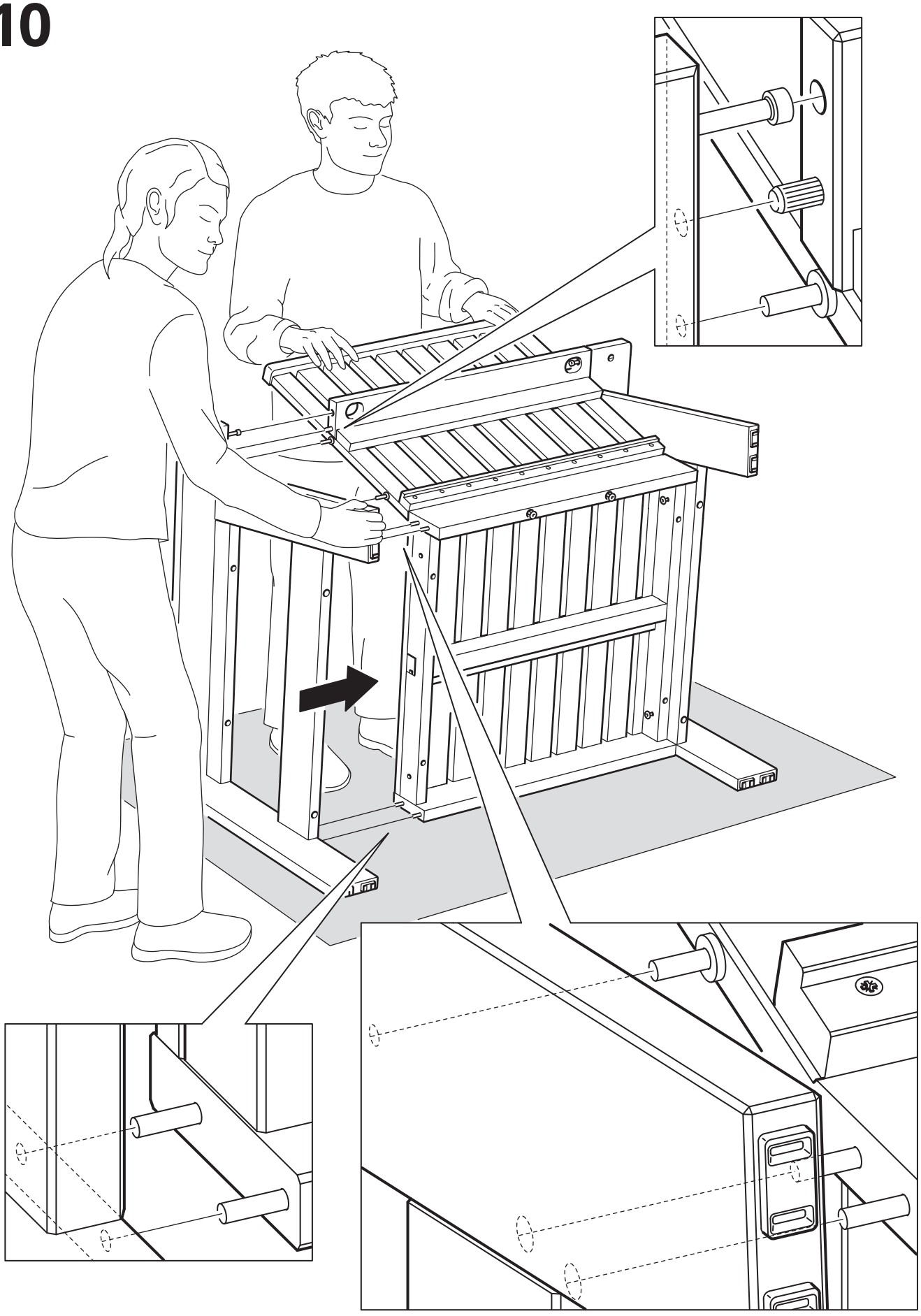

11

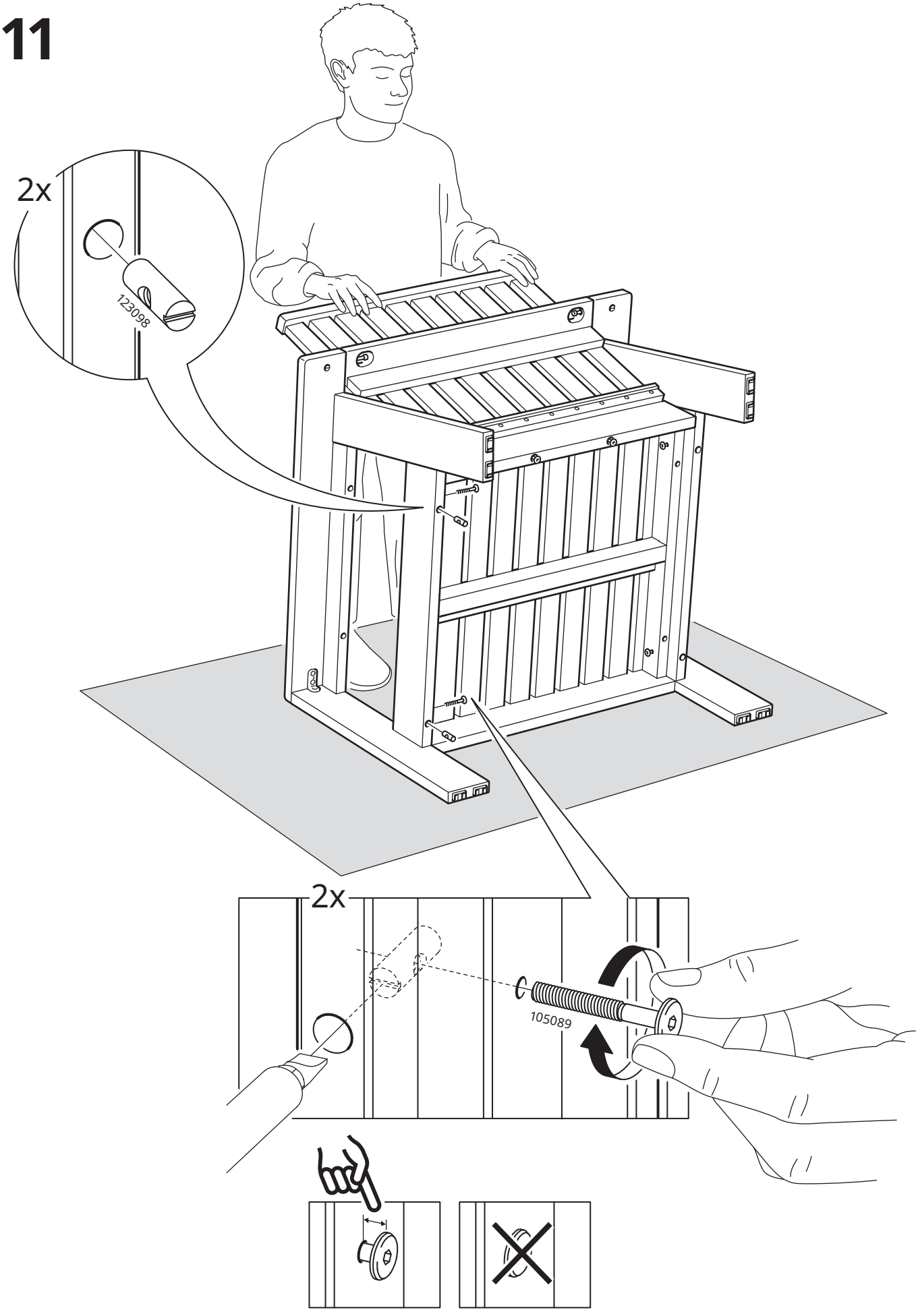

12

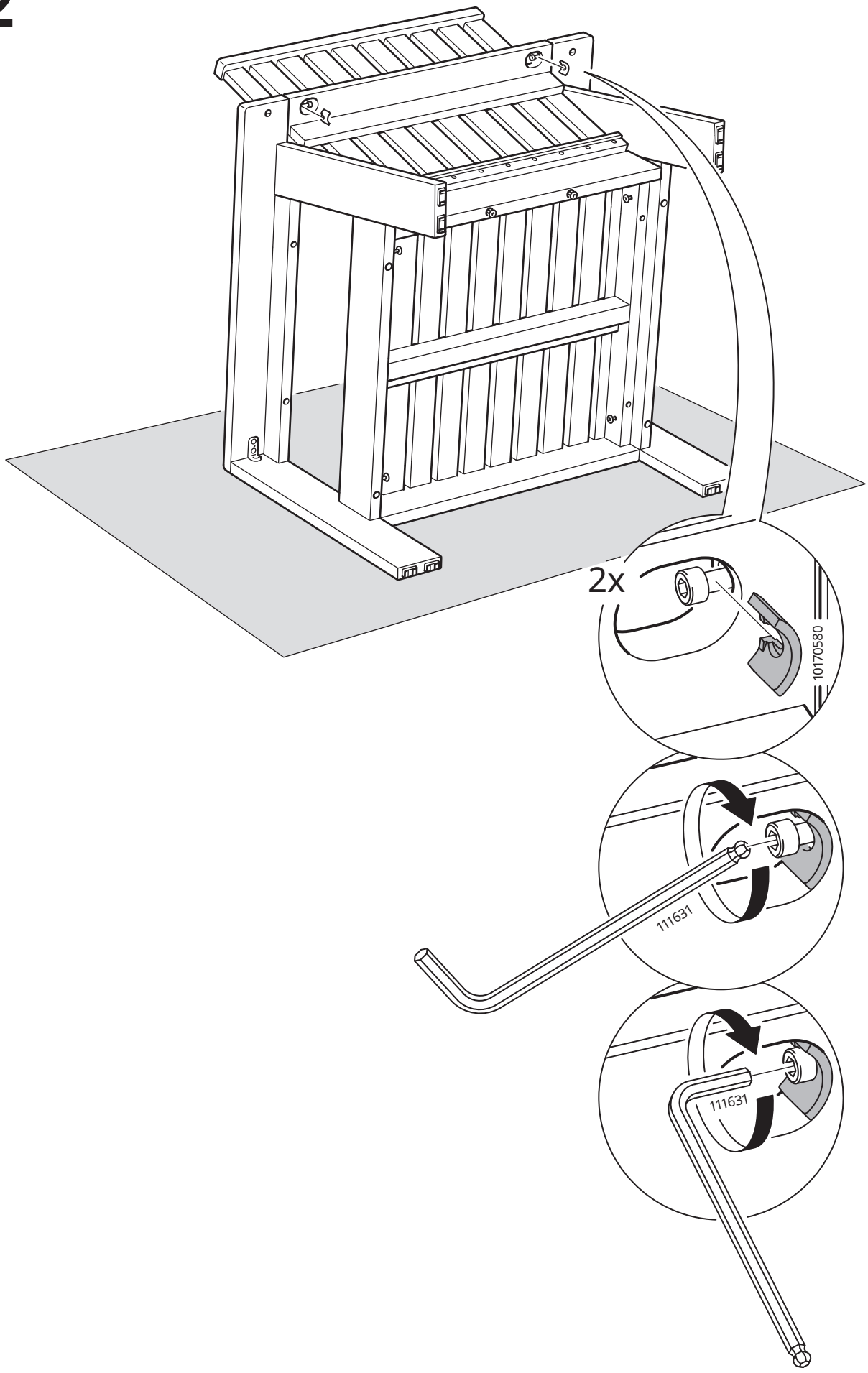

13

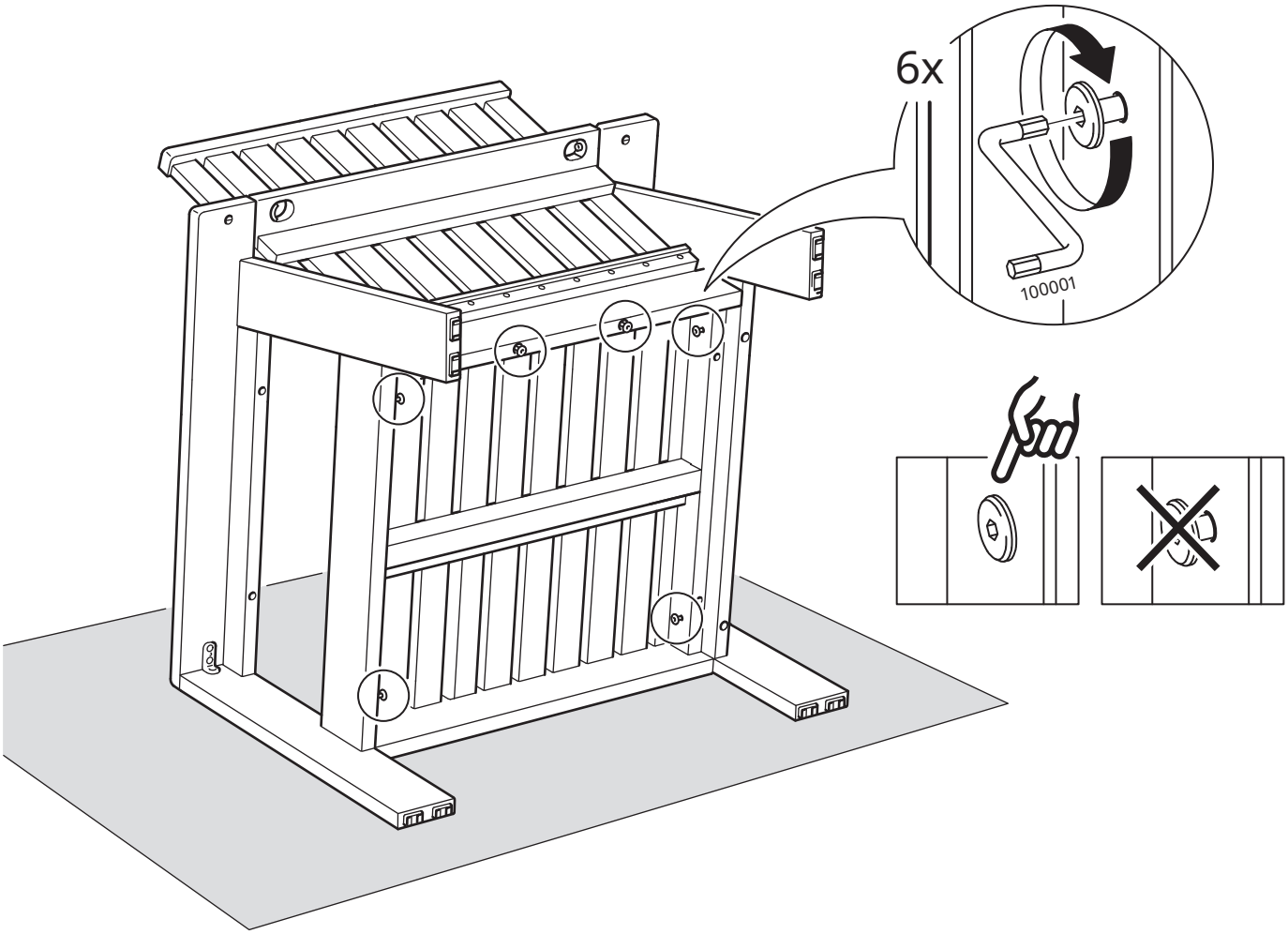

14



© Inter IKEA Systems B.V. 2025