FÅGLARÖ

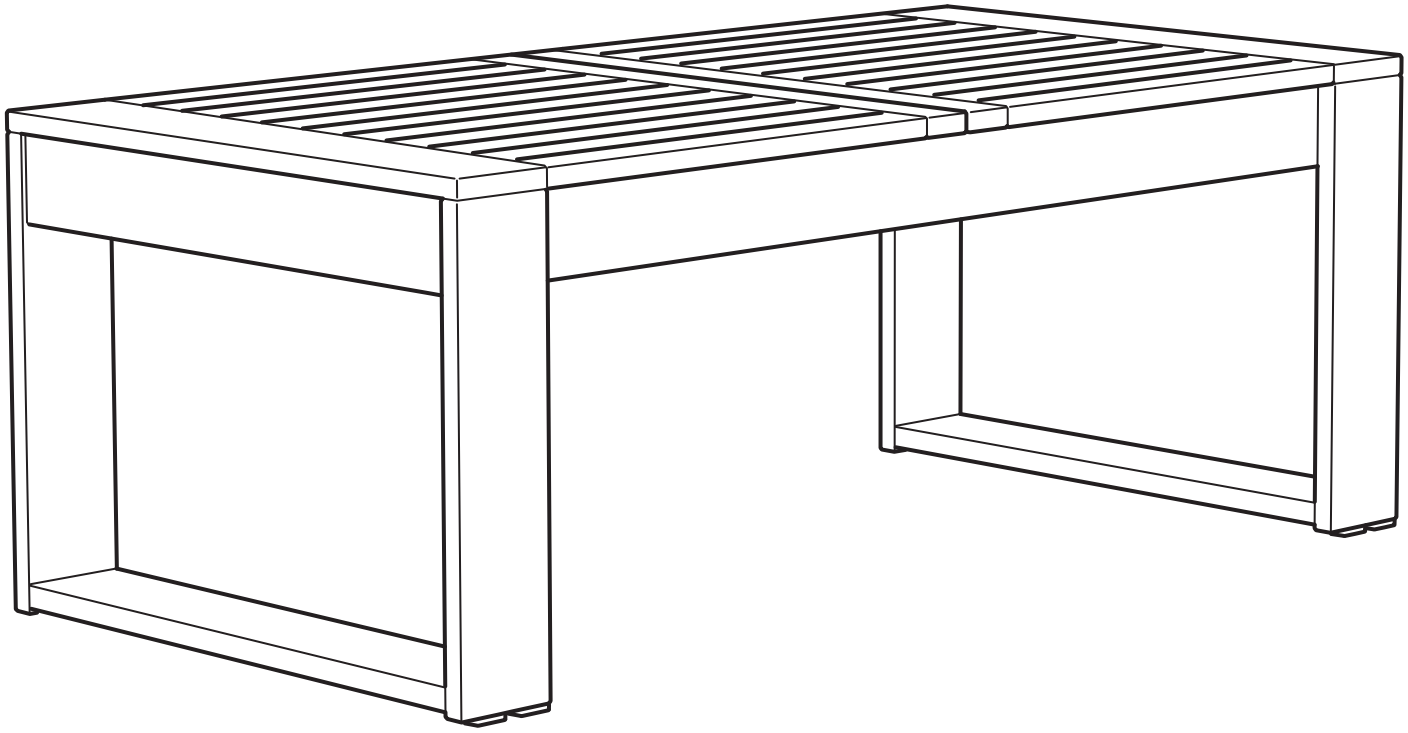

Design and Quality
IKEA of Sweden

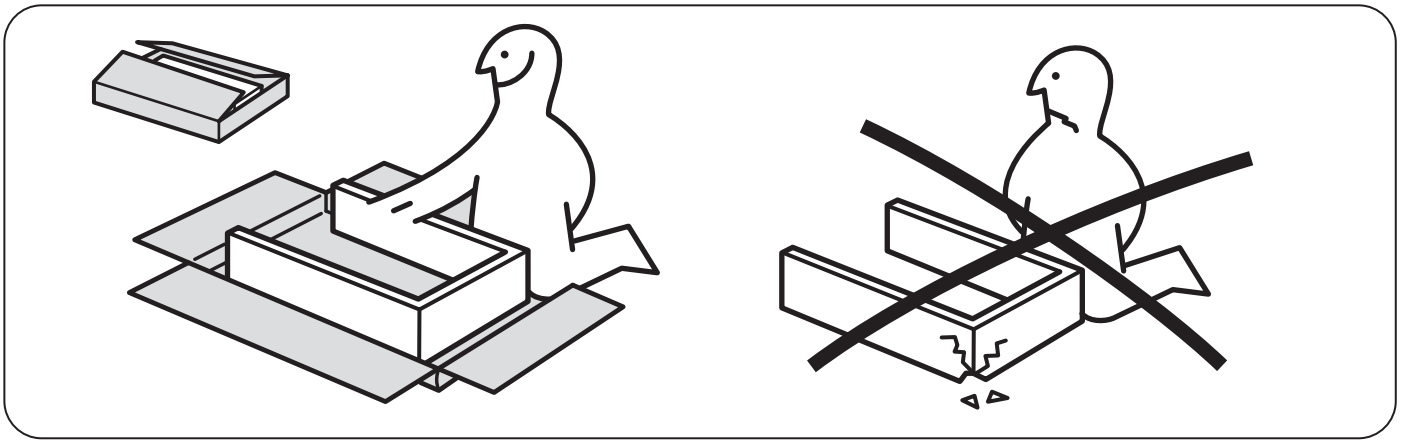

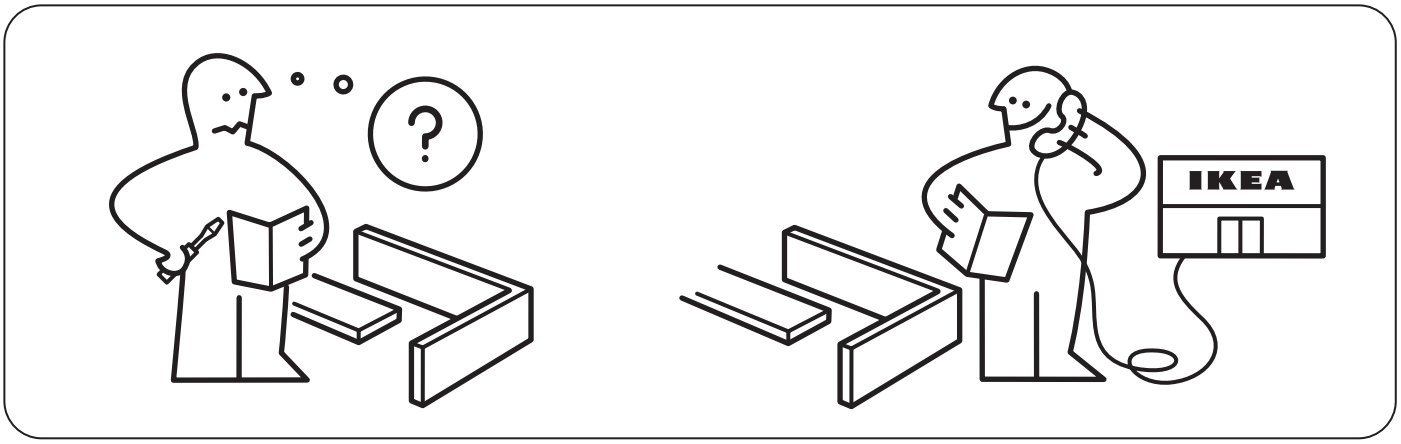
?
IKEA

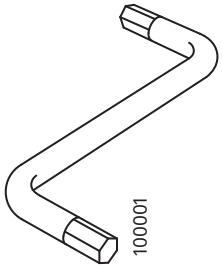

1x

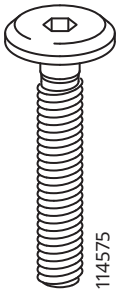

8x

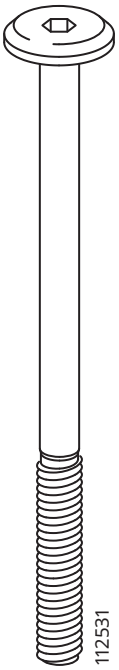

14x



3x

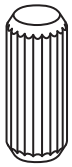

20x

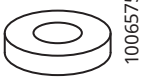

3x

1

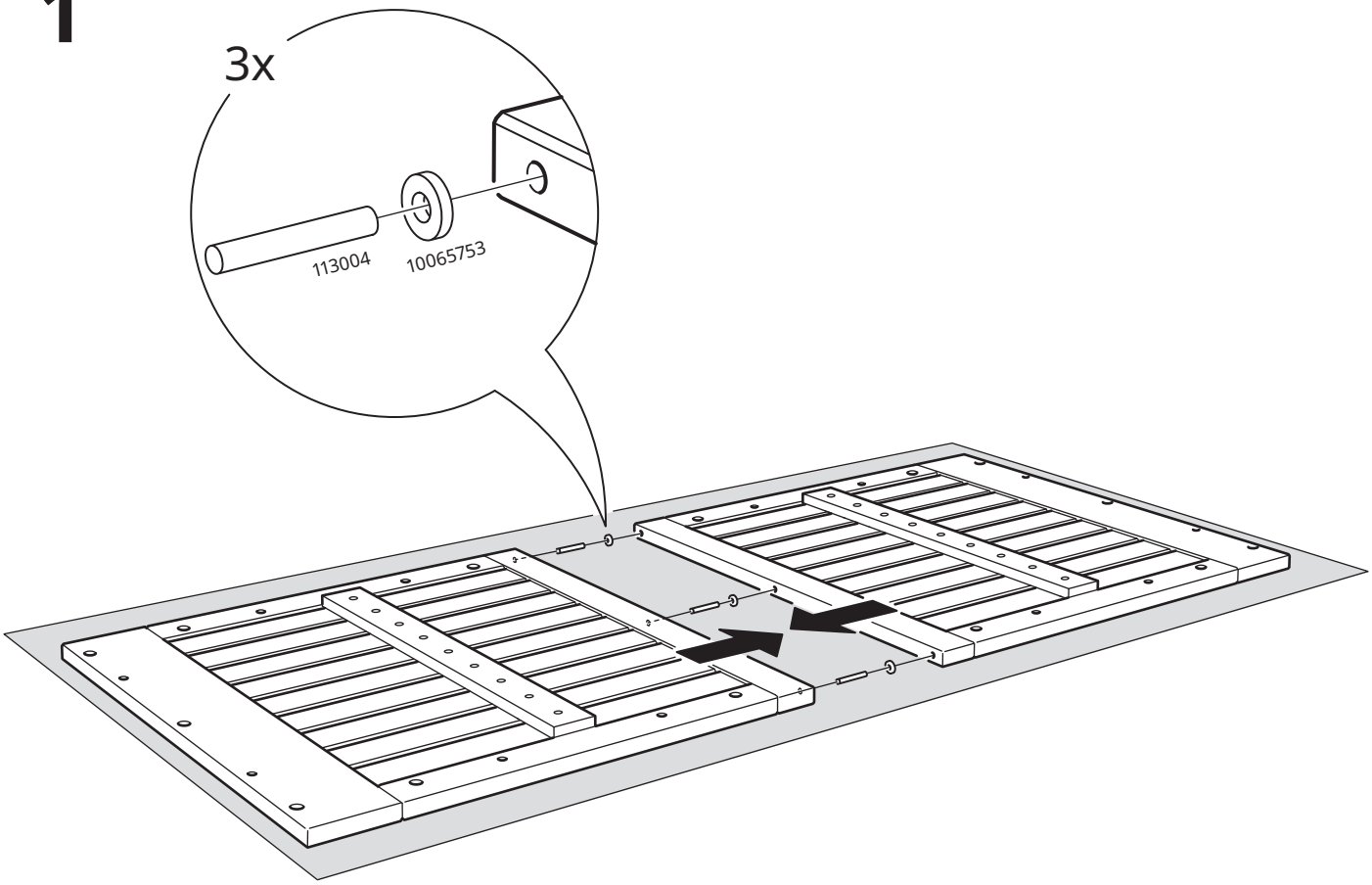

2

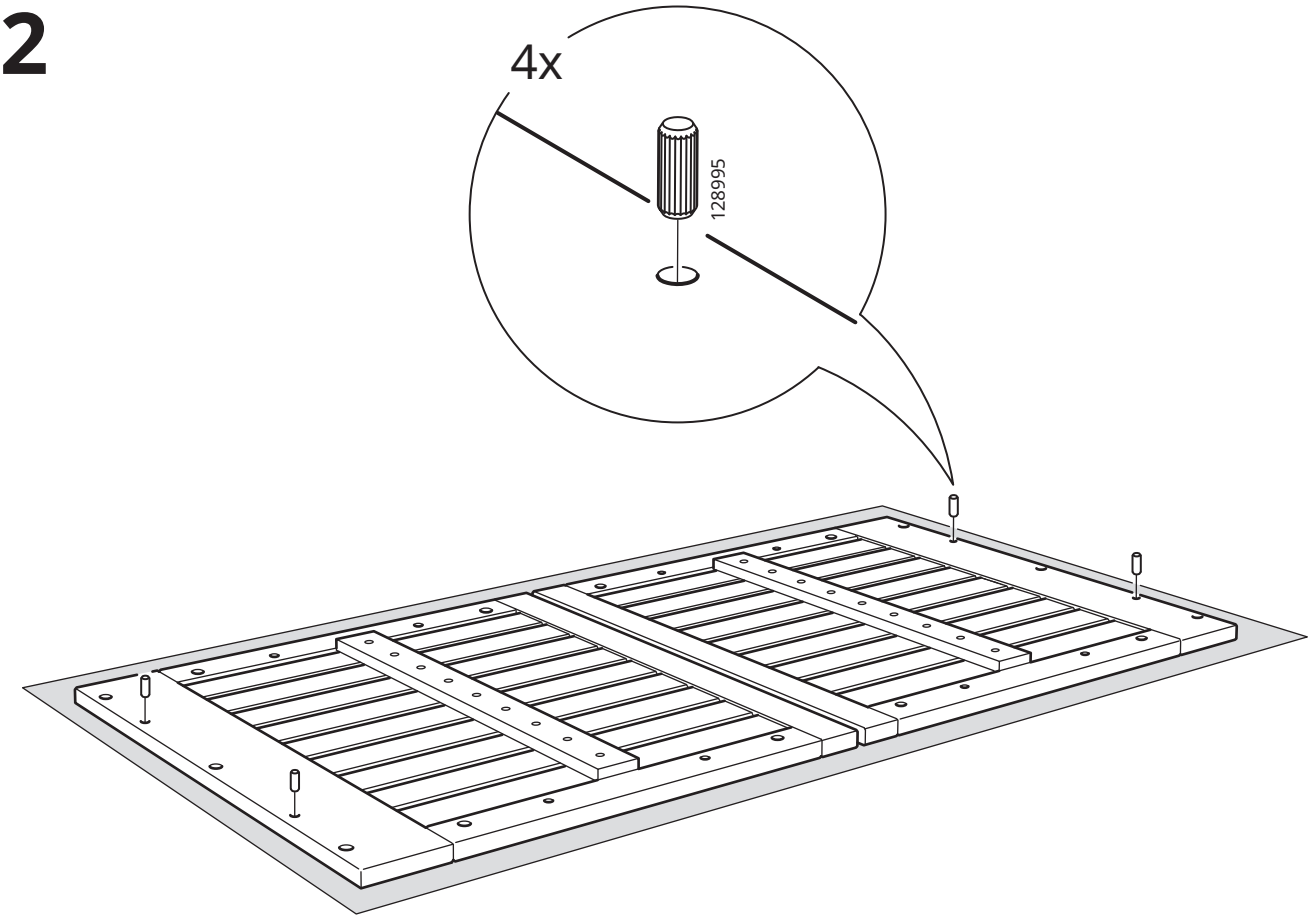

3

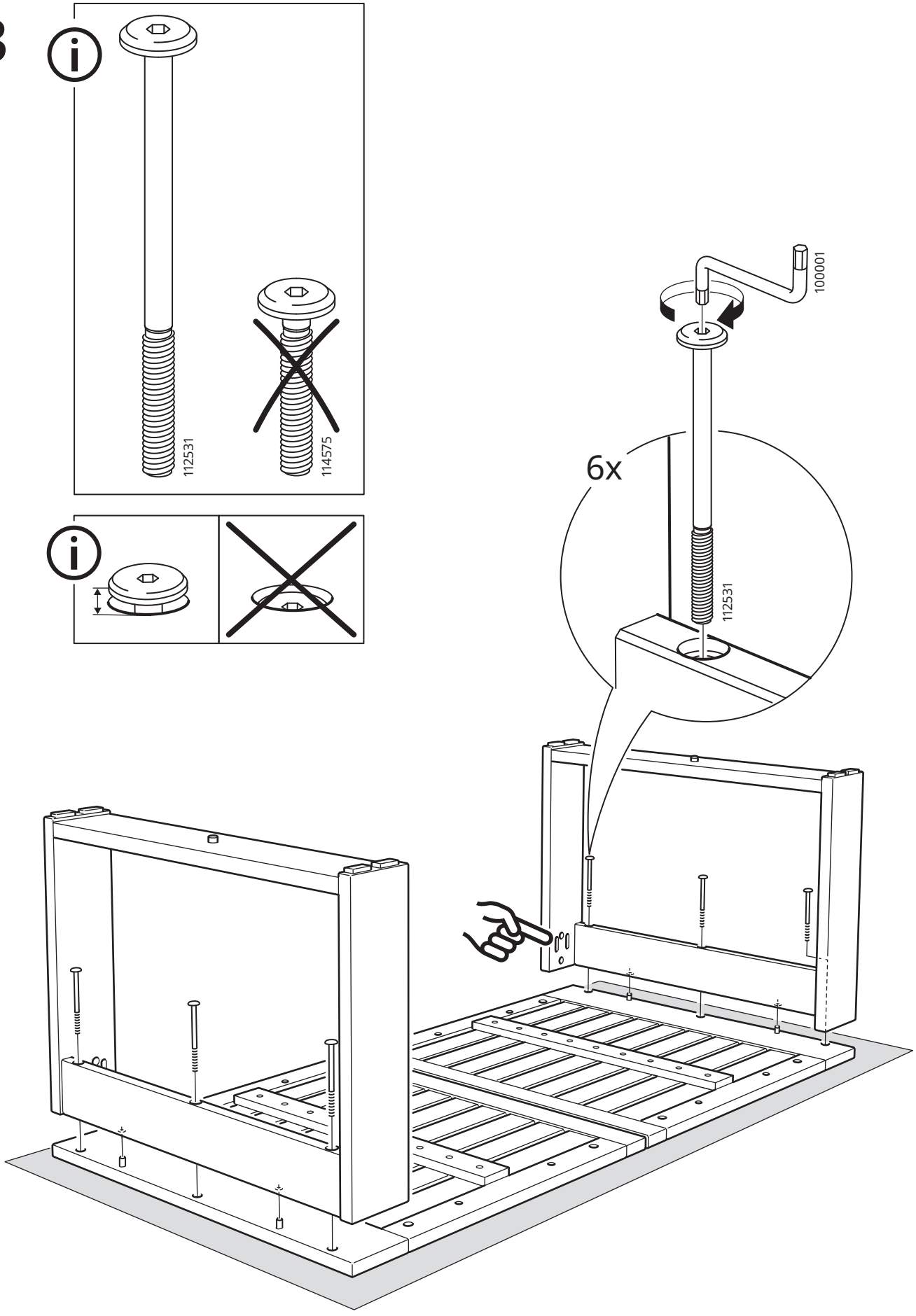

4

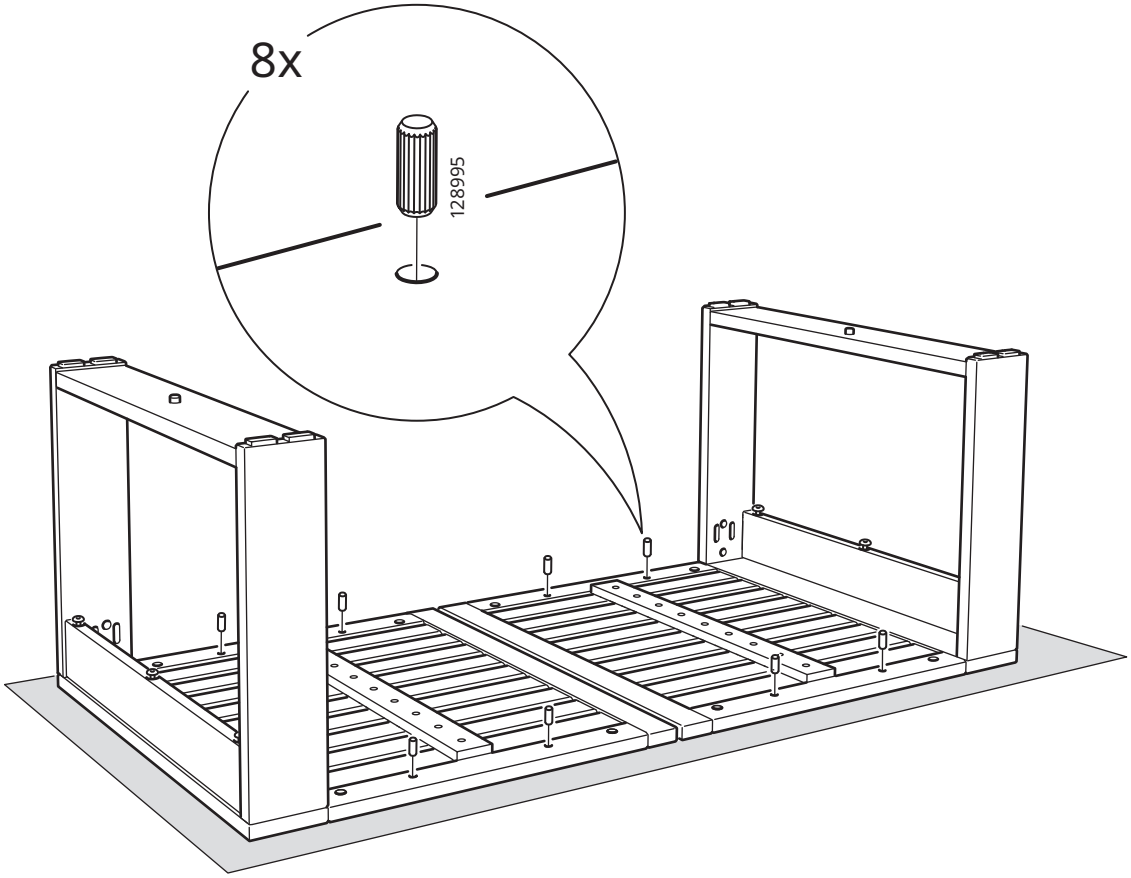

5

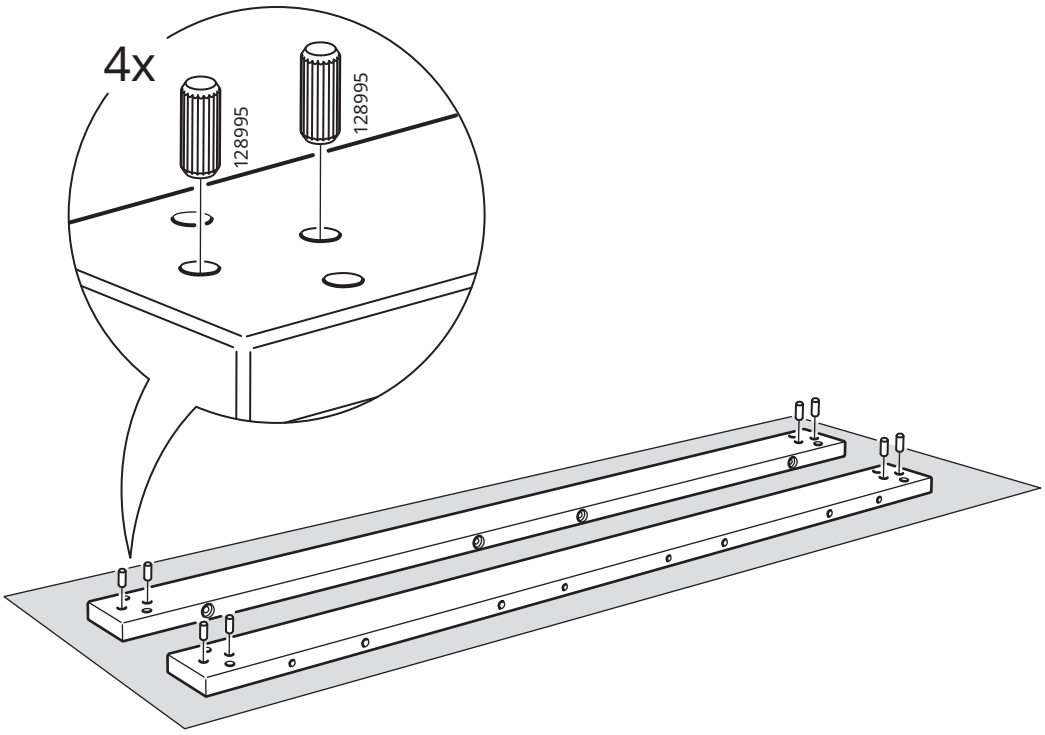

6

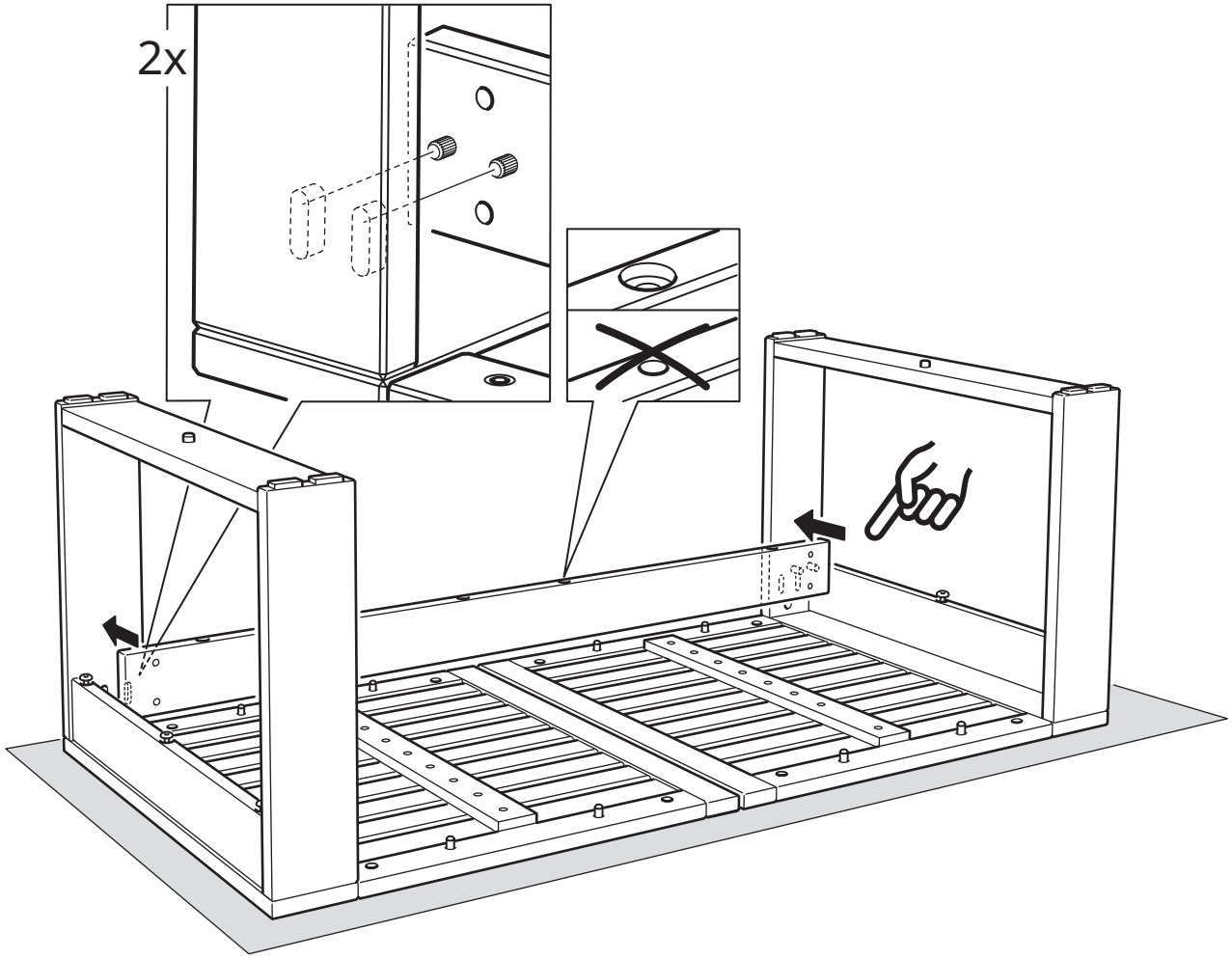

7

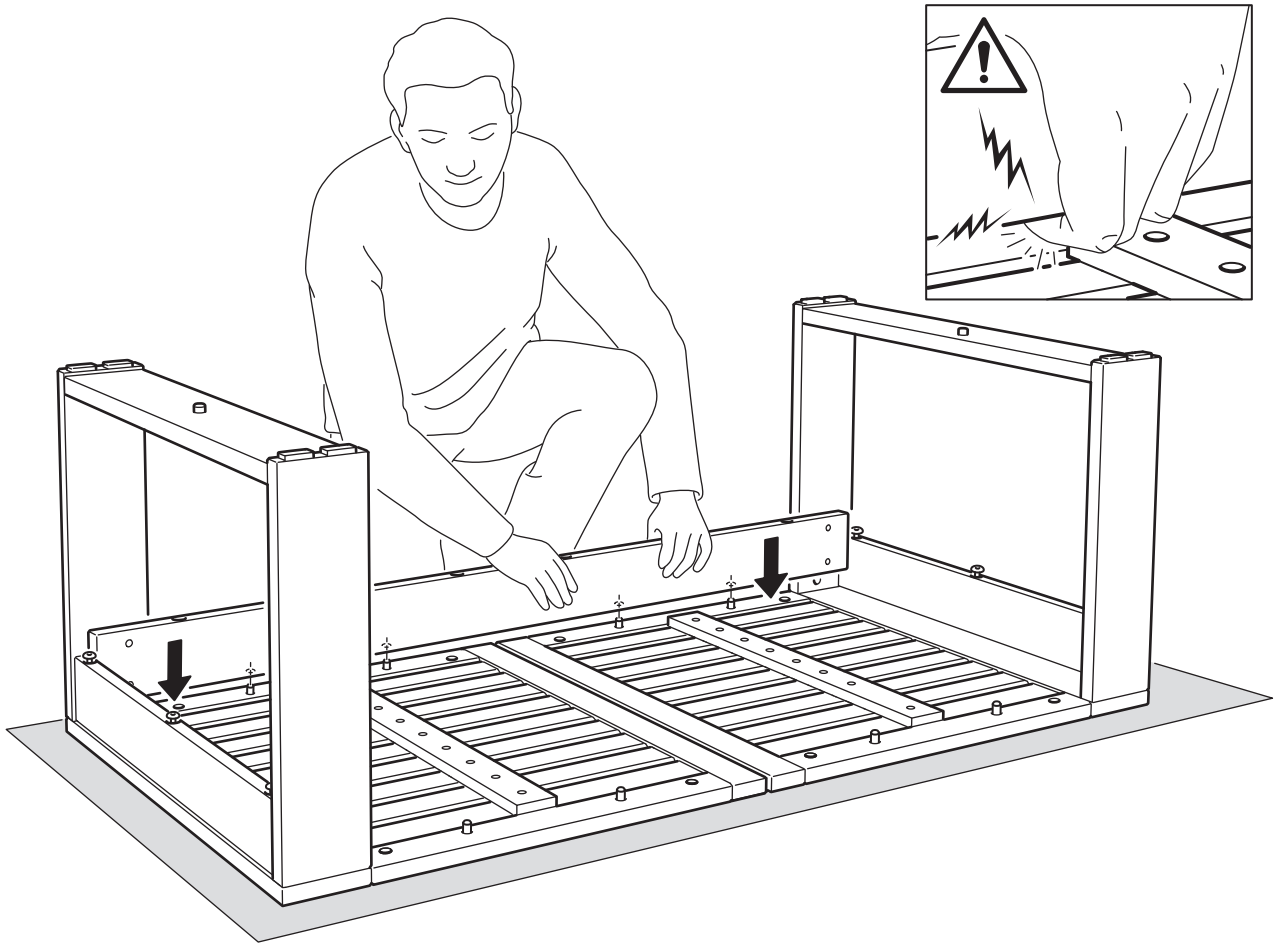

8

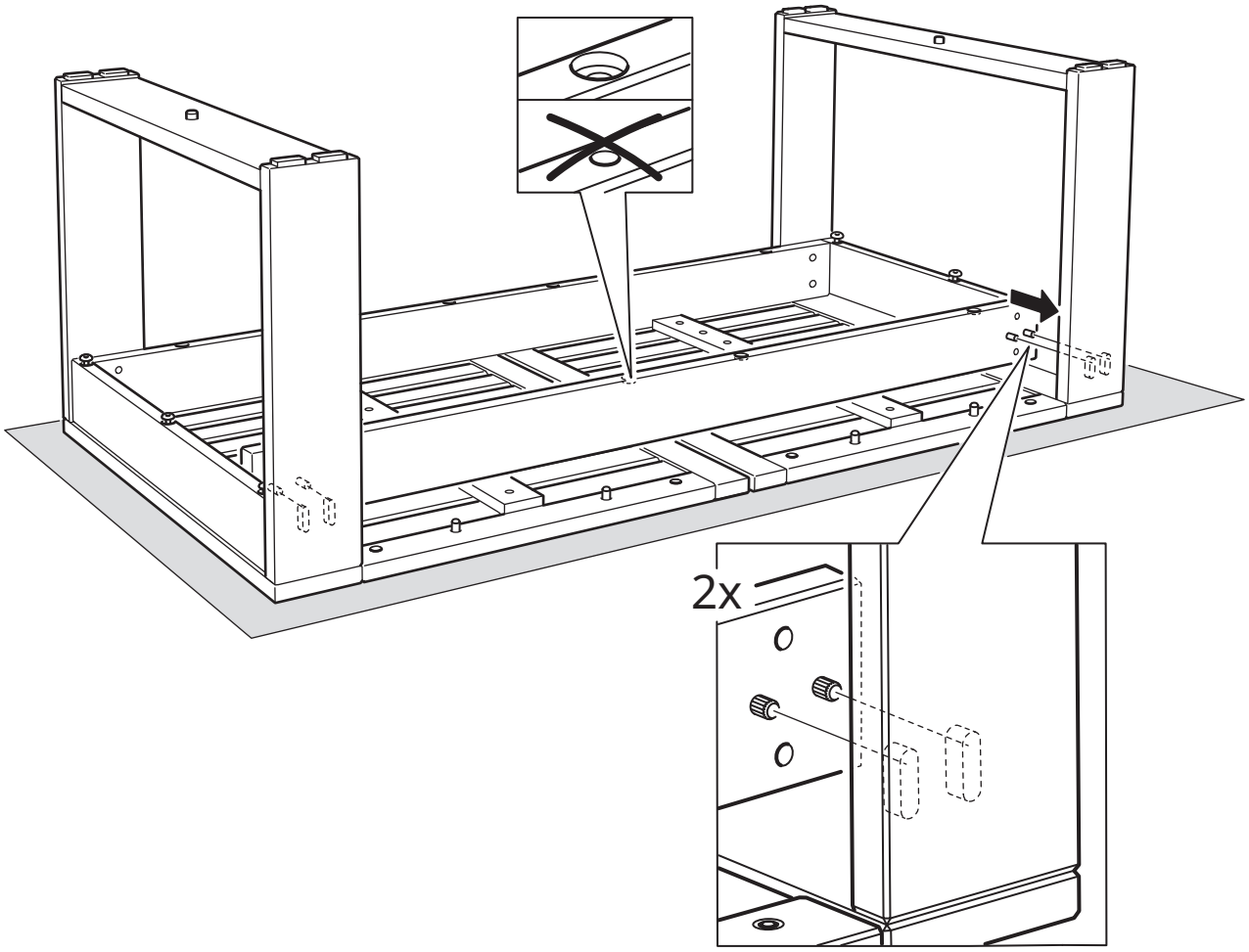

9

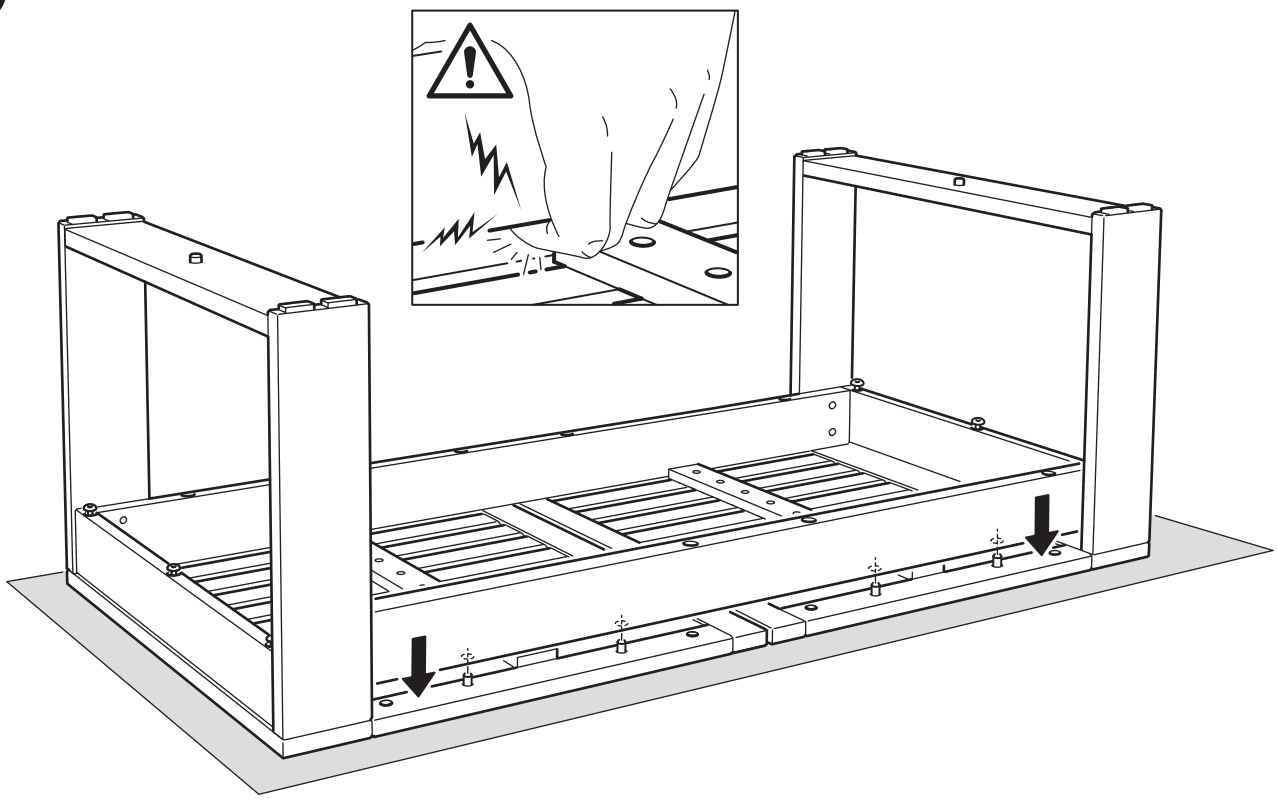

10

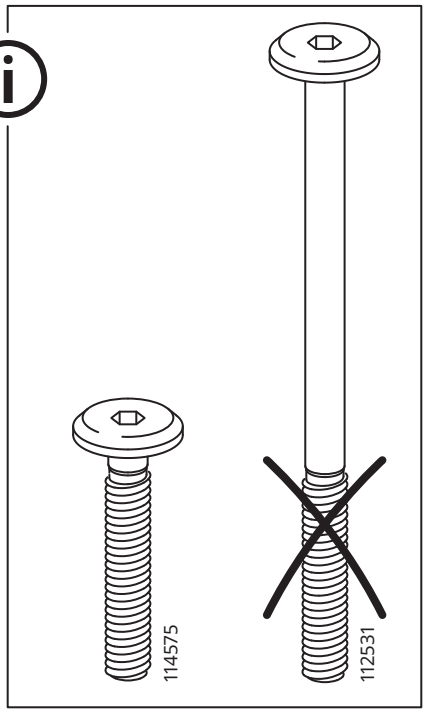

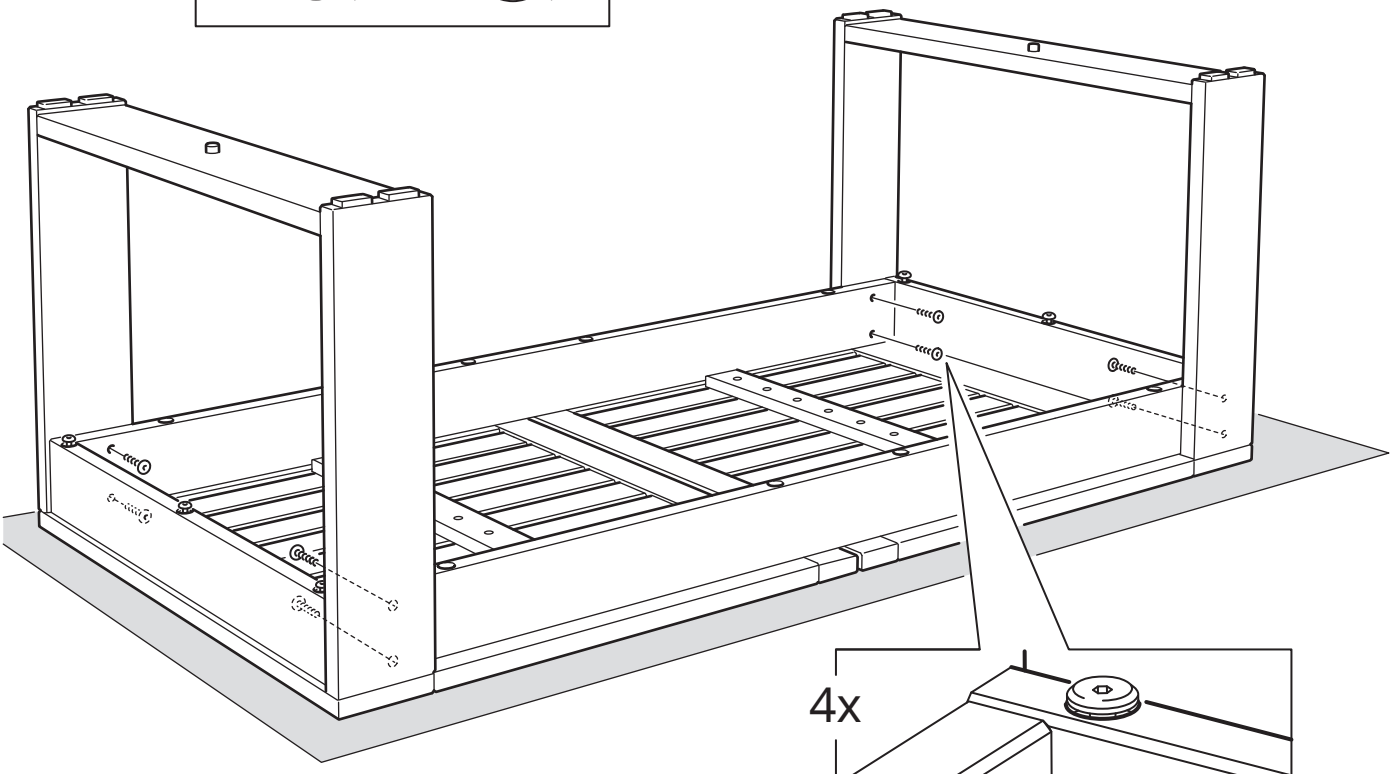

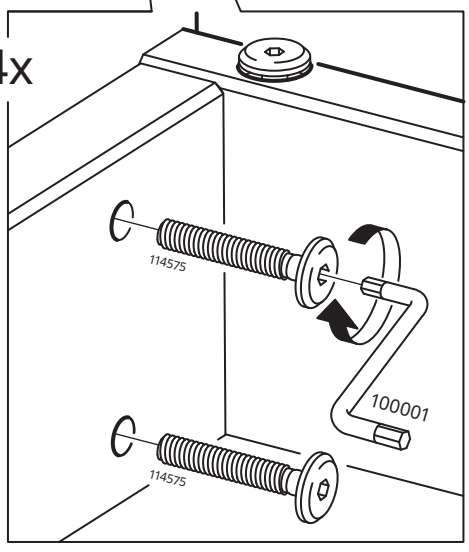

11

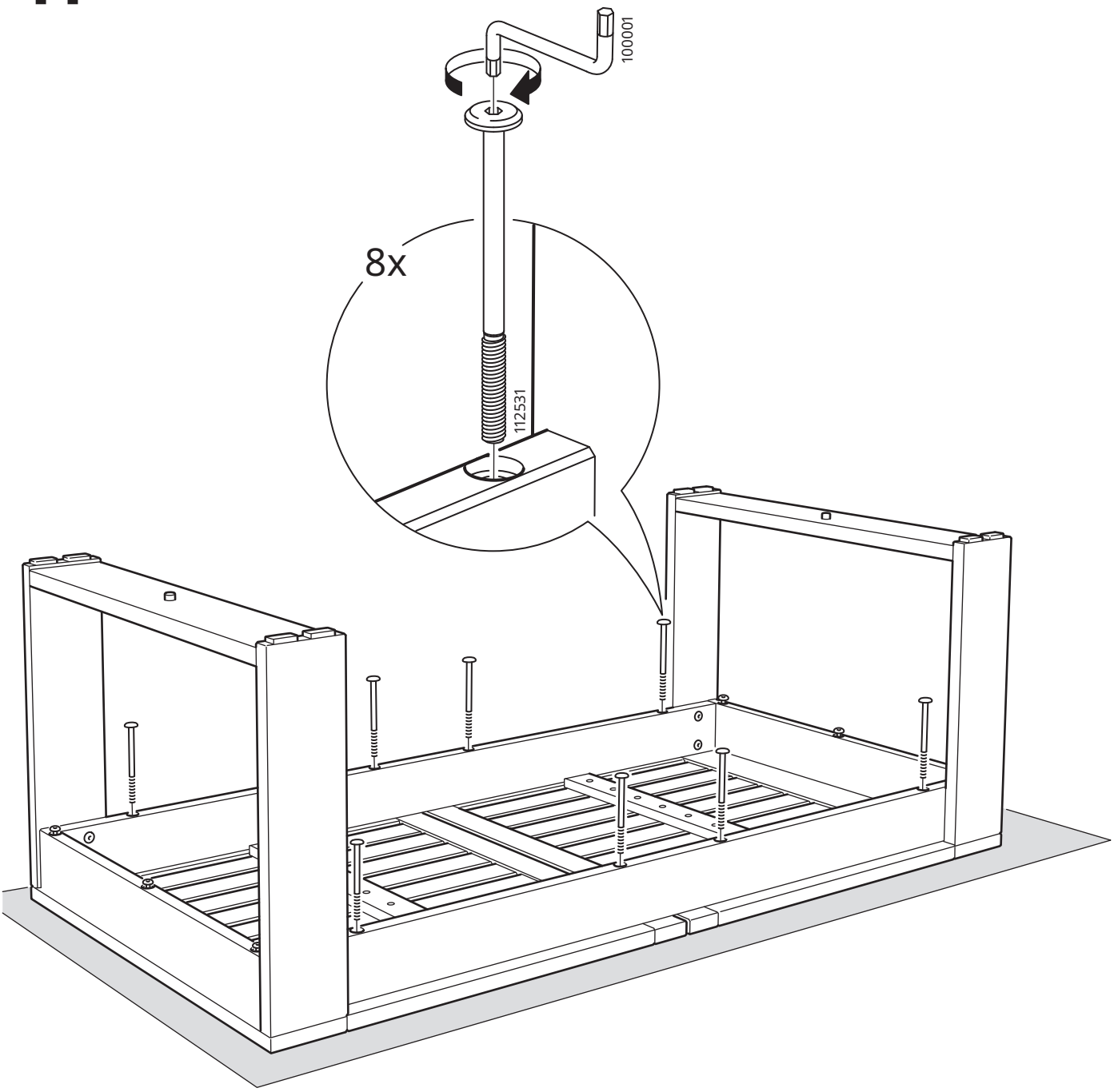

12

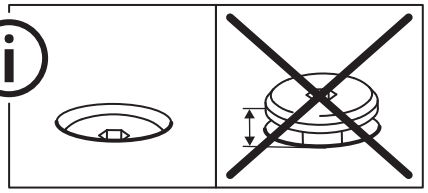

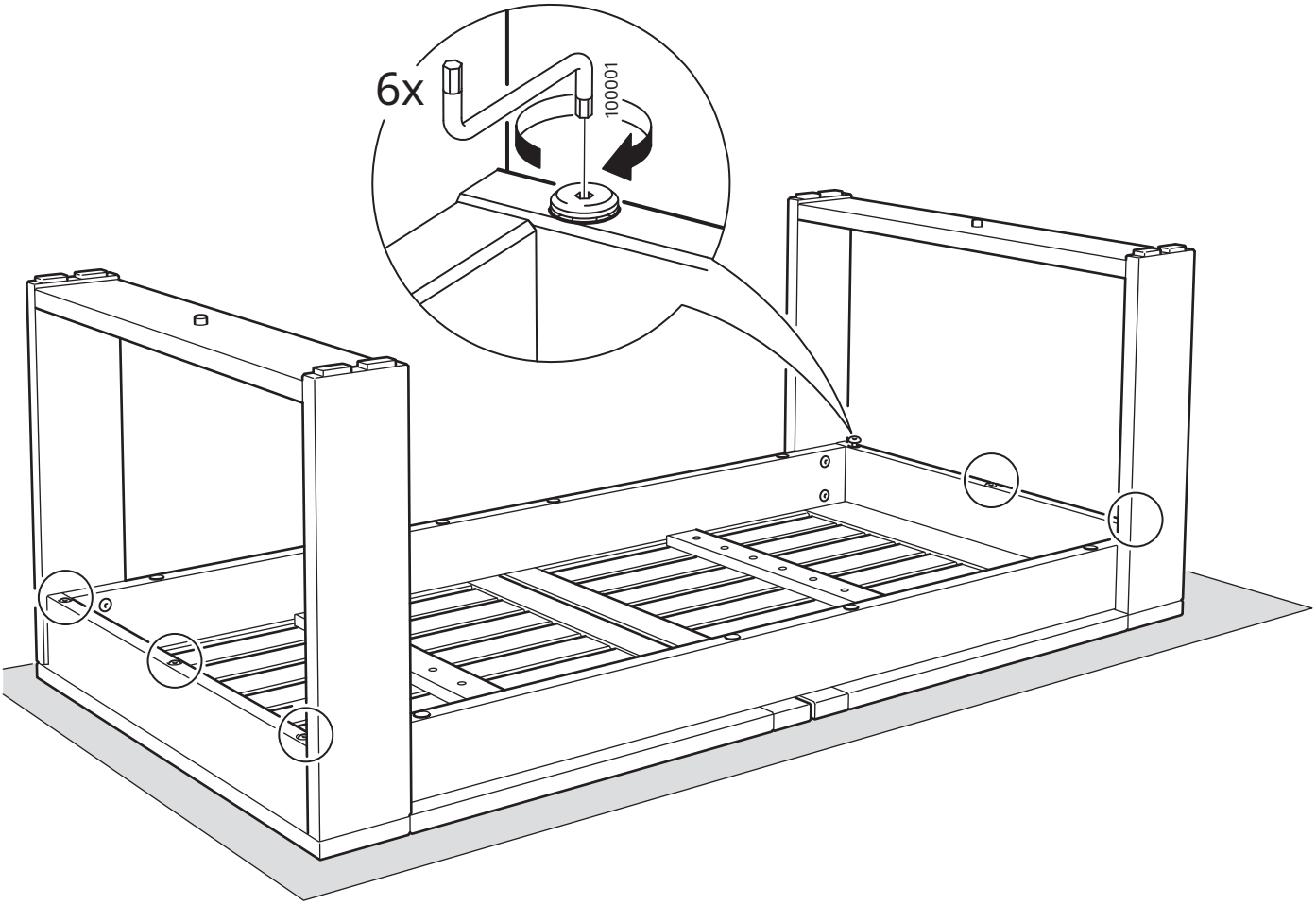

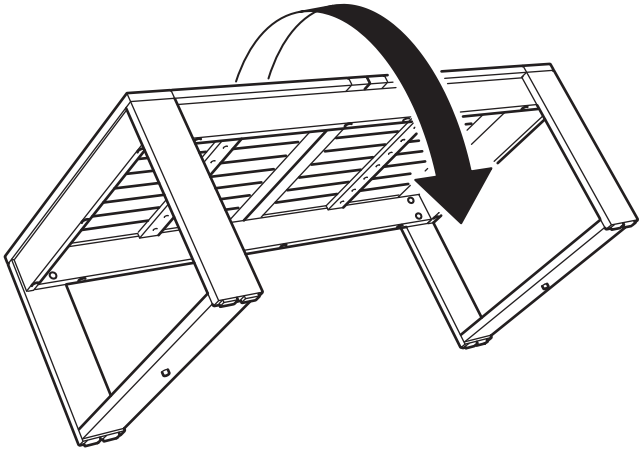

© Inter IKEA Systems B.V. 2025
2026-01-22 AA-2680209-1