EKET

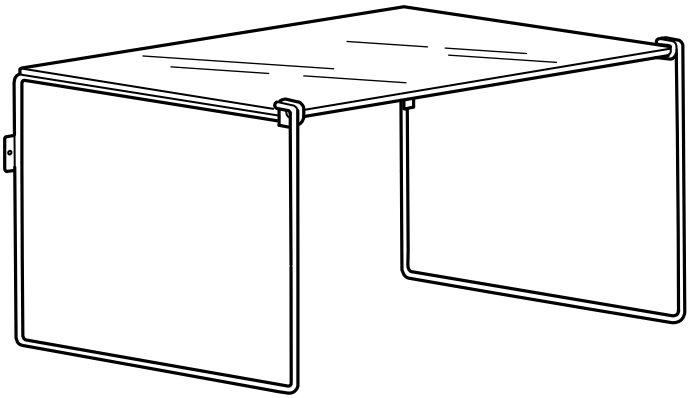

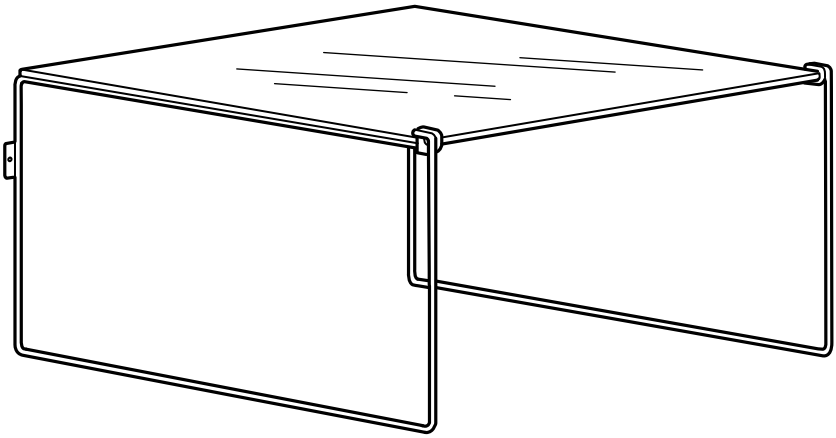

Design and Quality
IKEA of Sweden

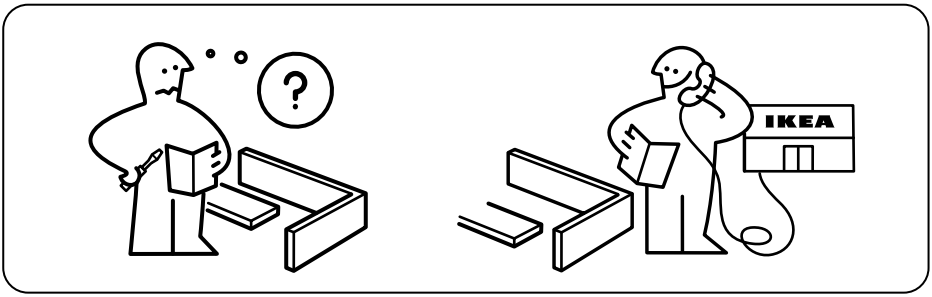
?
IKEA

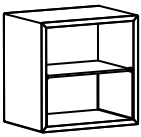

25 cm
(9 7/8")

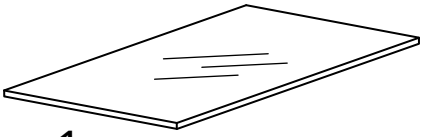

1x

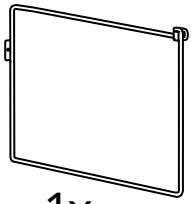

1x

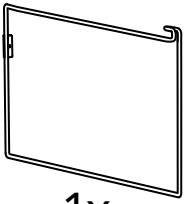

1x

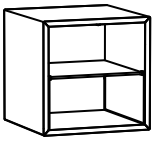

35 cm
(13 3/4")

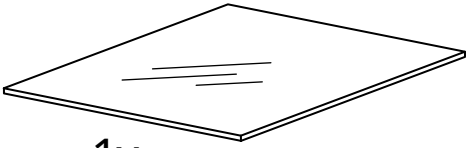

1x

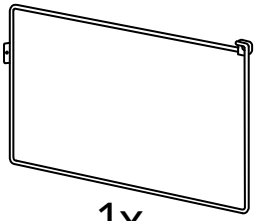

1x

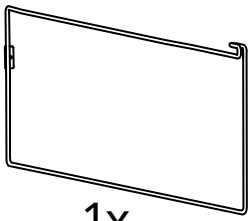

1x

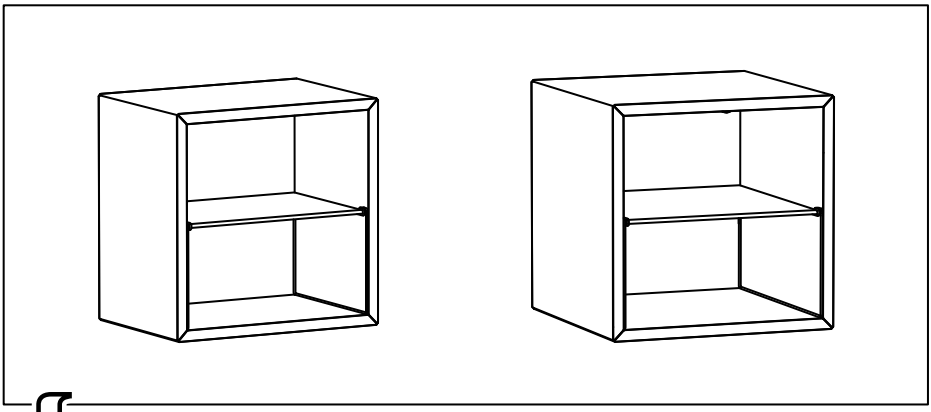

1

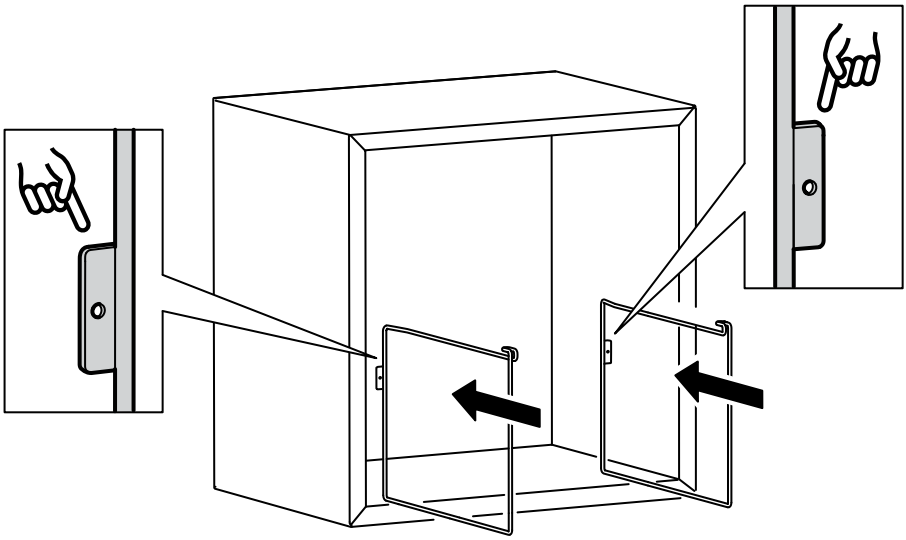

2

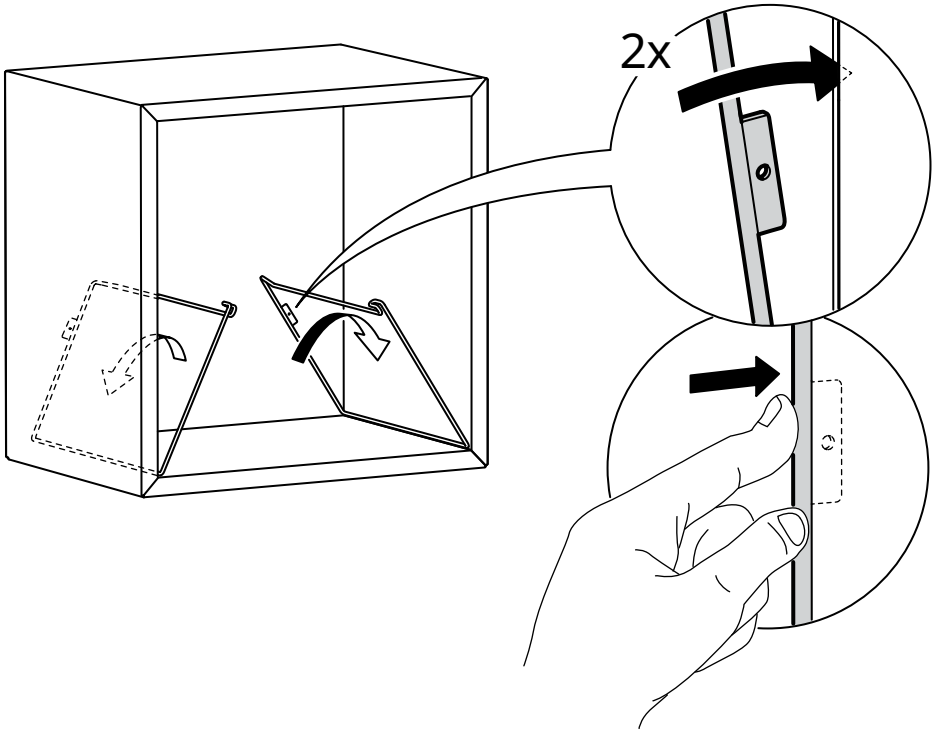

3

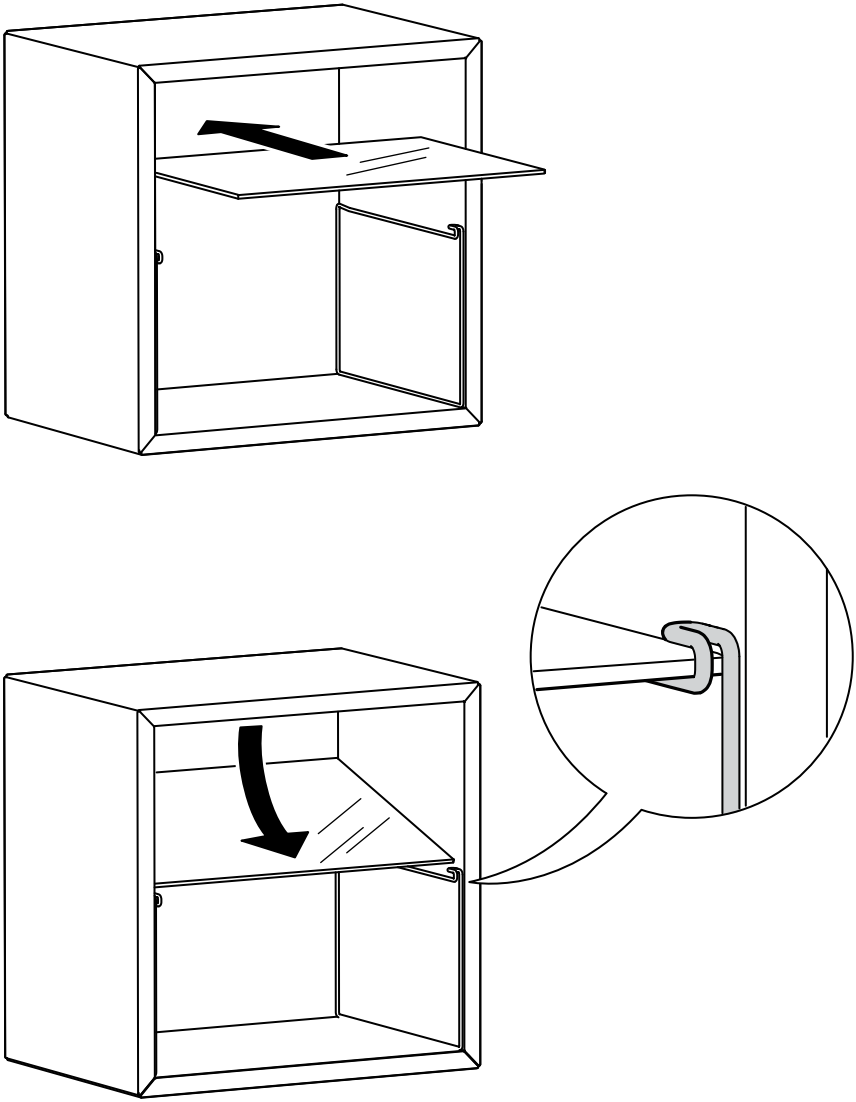

© Inter IKEA Systems B.V. 2025
2026-01-08 AA-2680910-1