BLÅHAKE

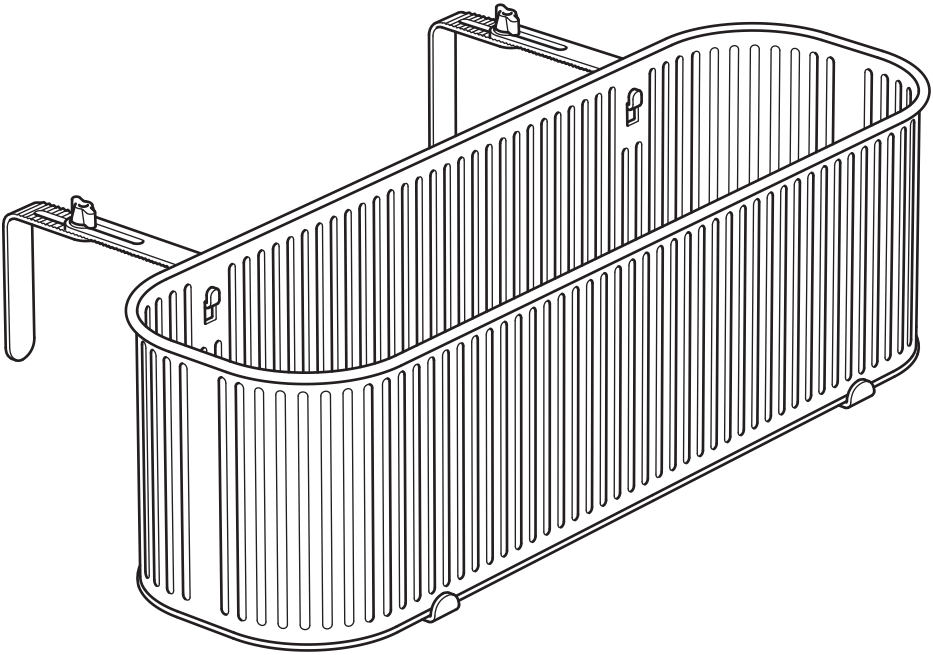

Design and Quality
IKEA of Sweden

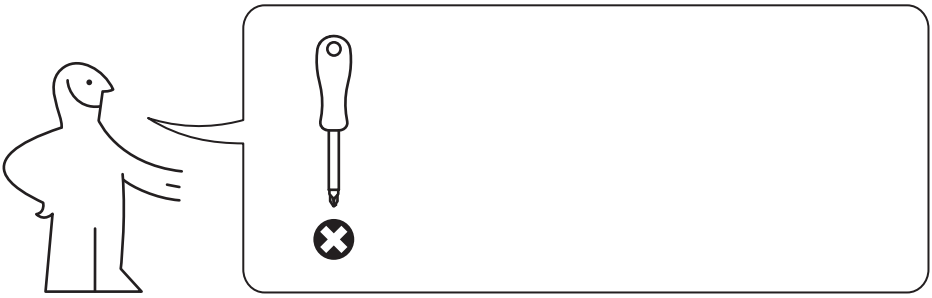

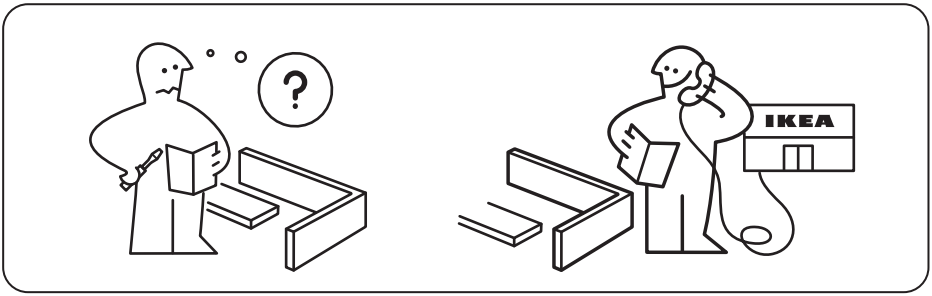
?
IKEA

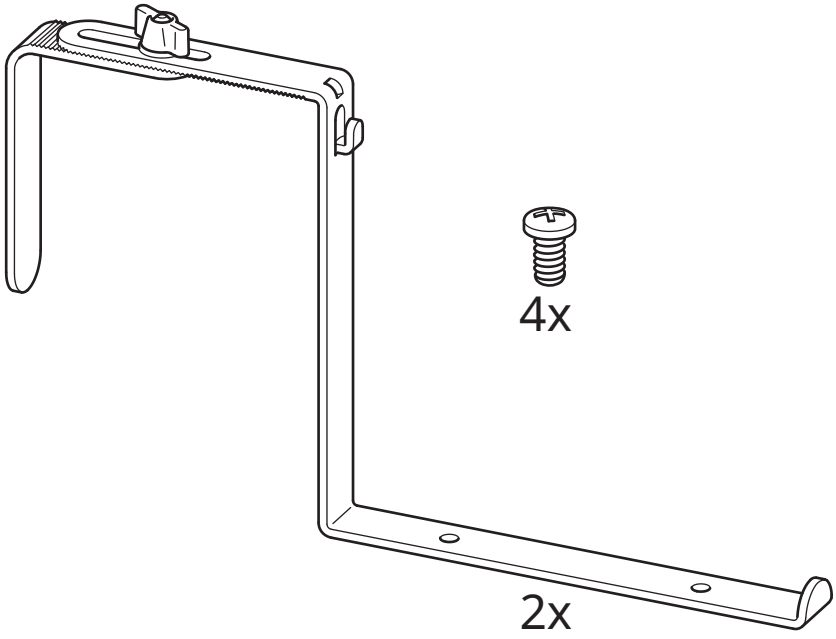
4x
2x

1

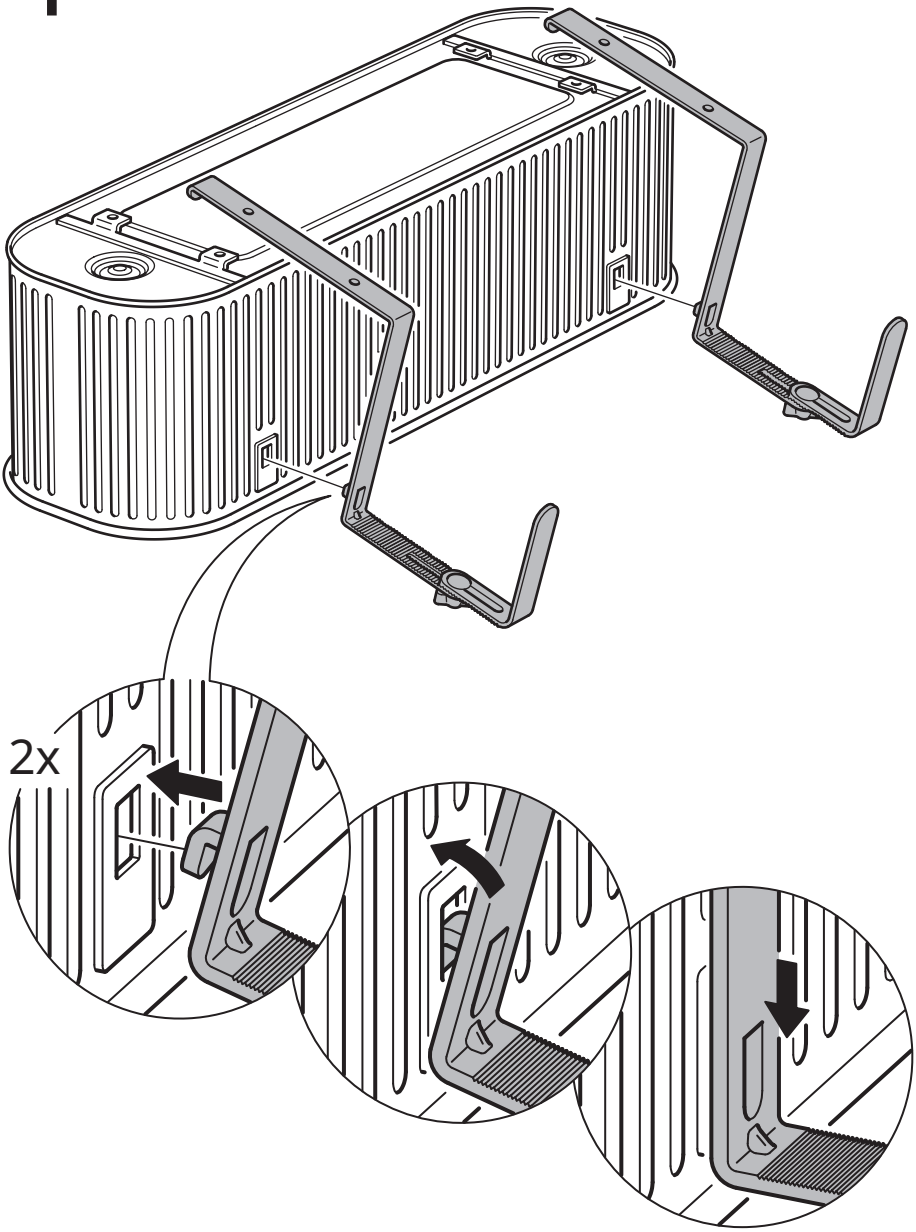

2

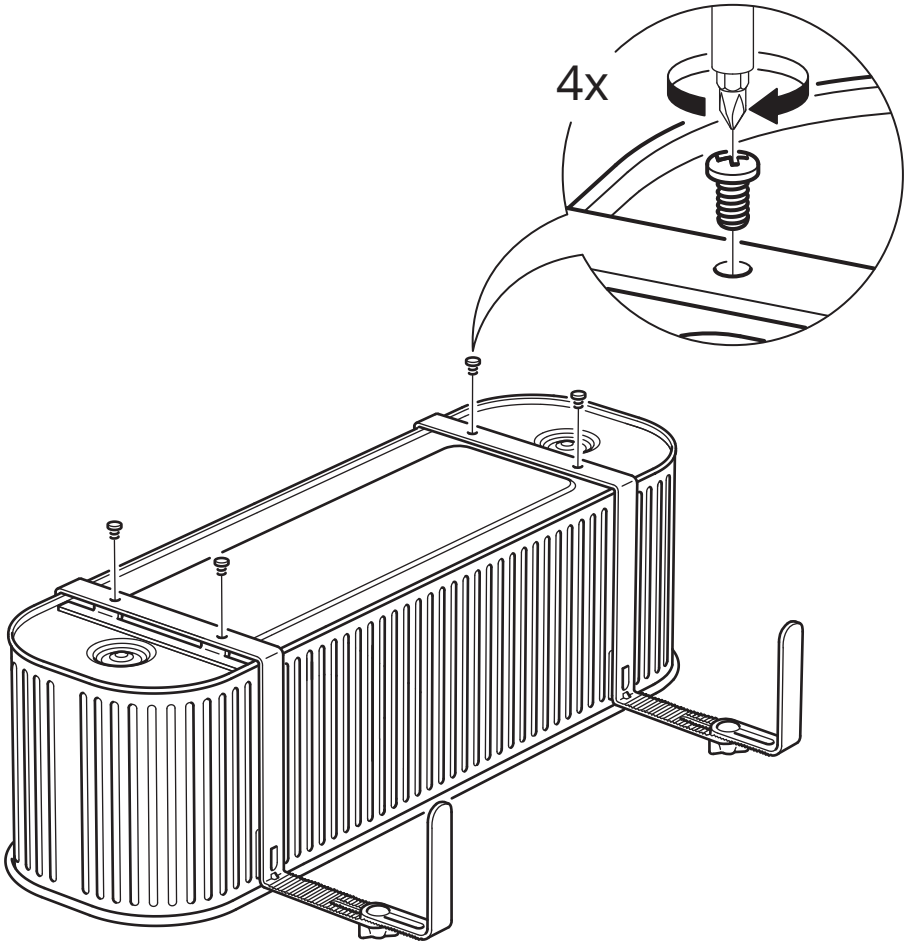

3

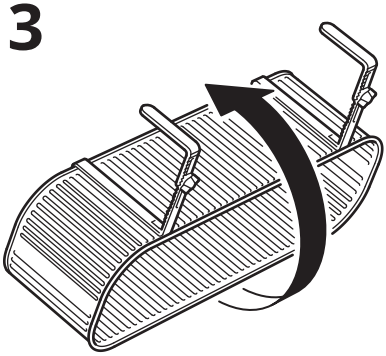

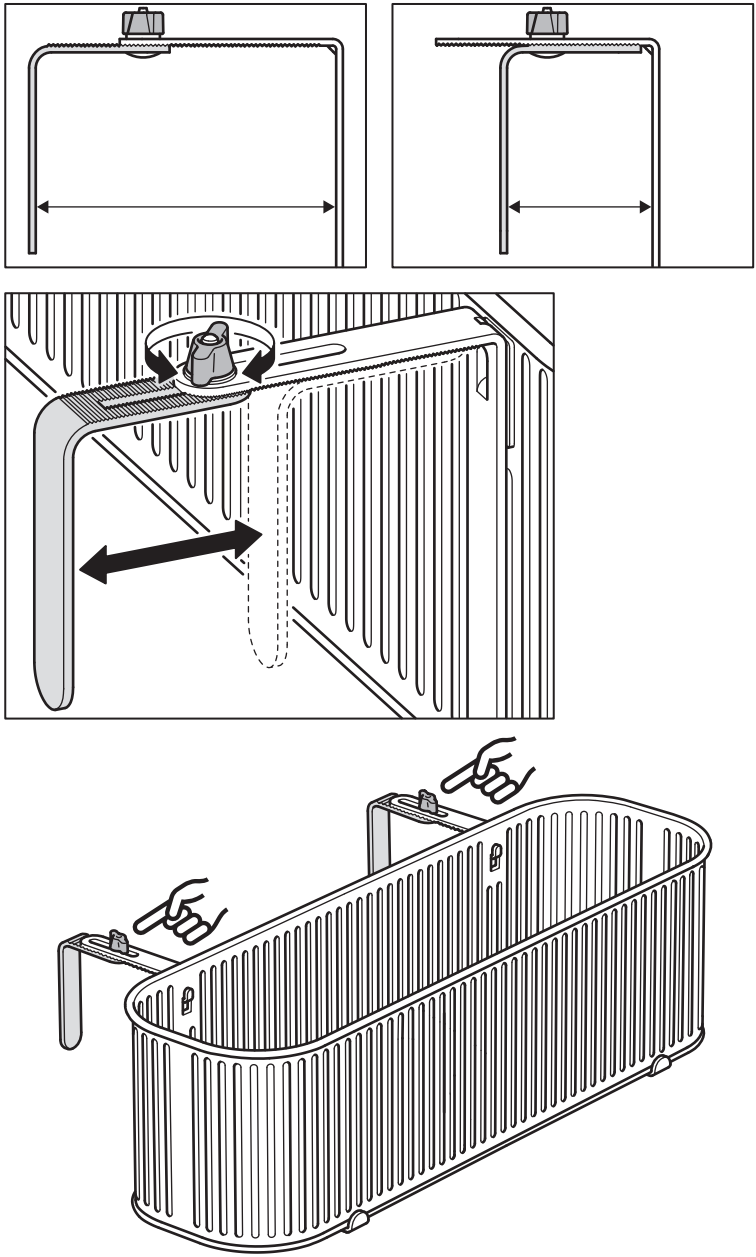

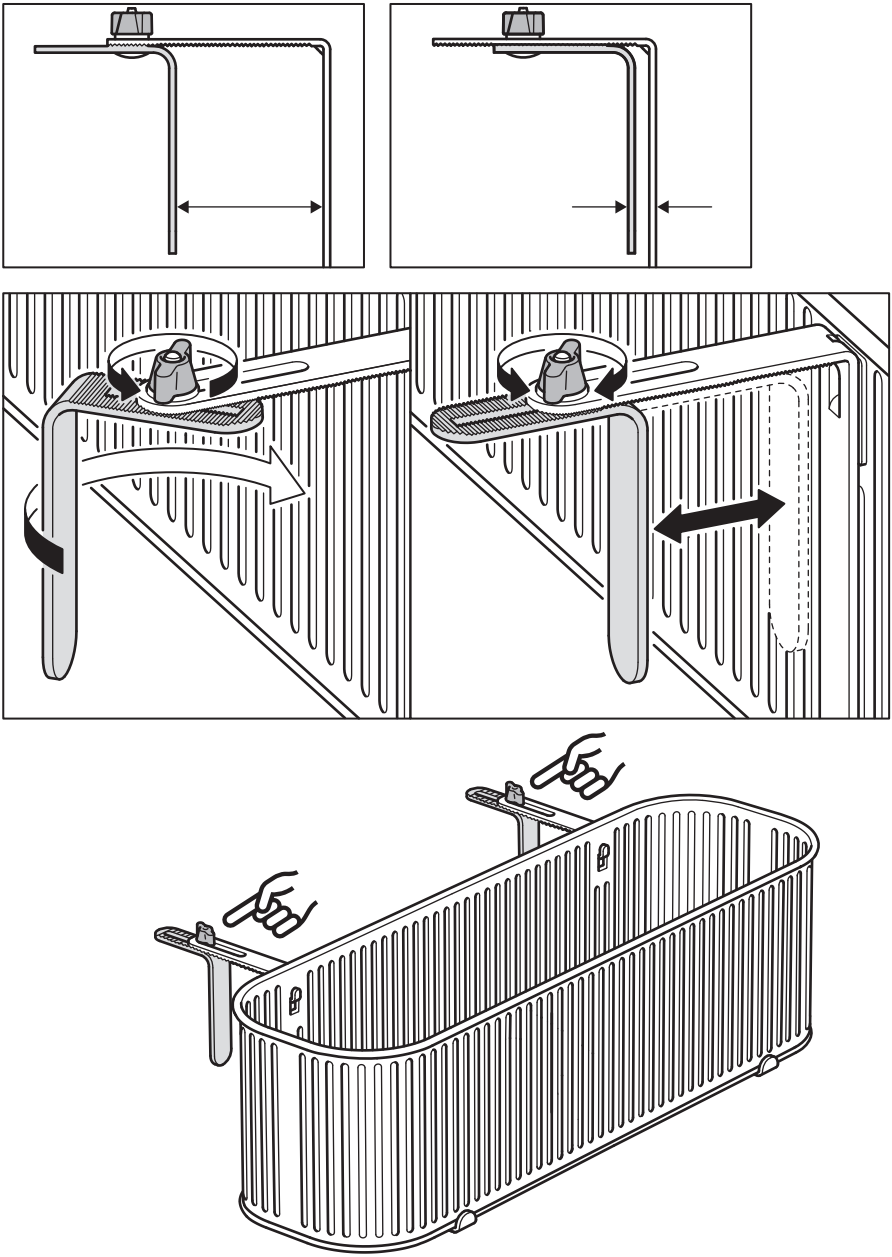

© Inter IKEA Systems B.V. 2026
2026-02-09 AA-2693244-1