INVALLNING

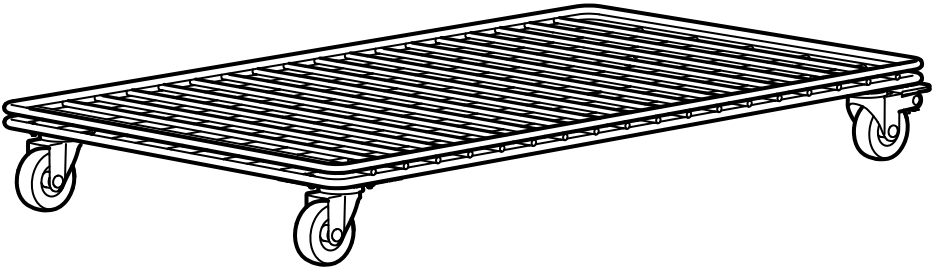

Design and Quality
IKEA of Sweden

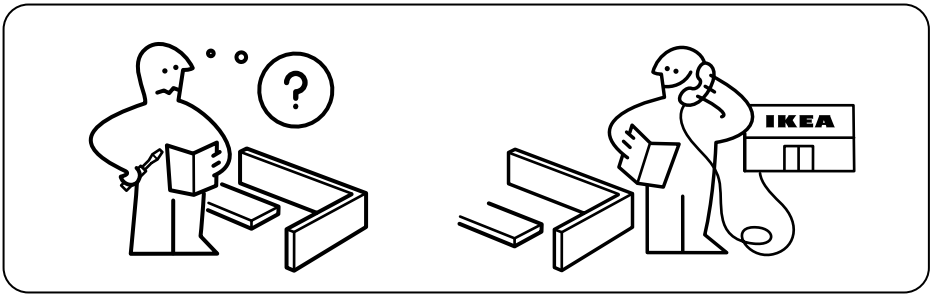

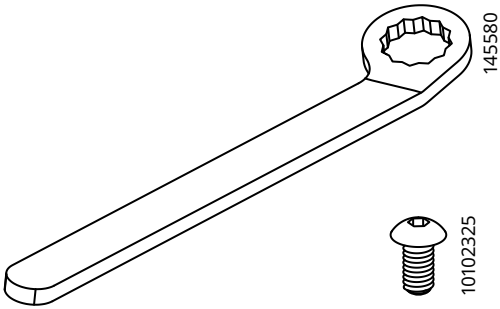

1x

16x

16x

1x

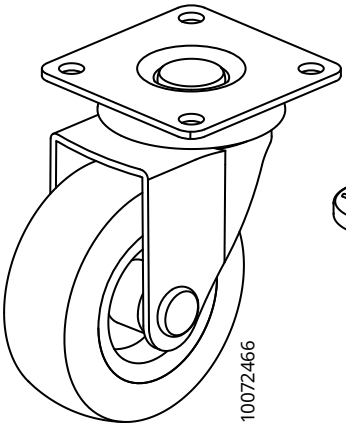

2x

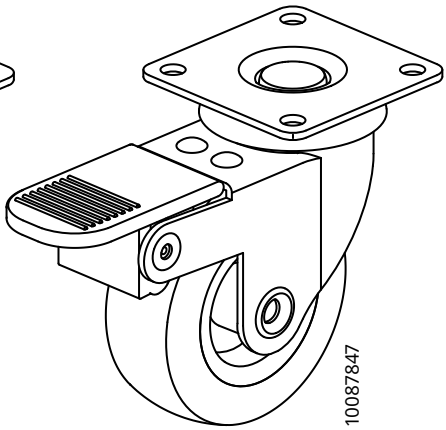

2x

1

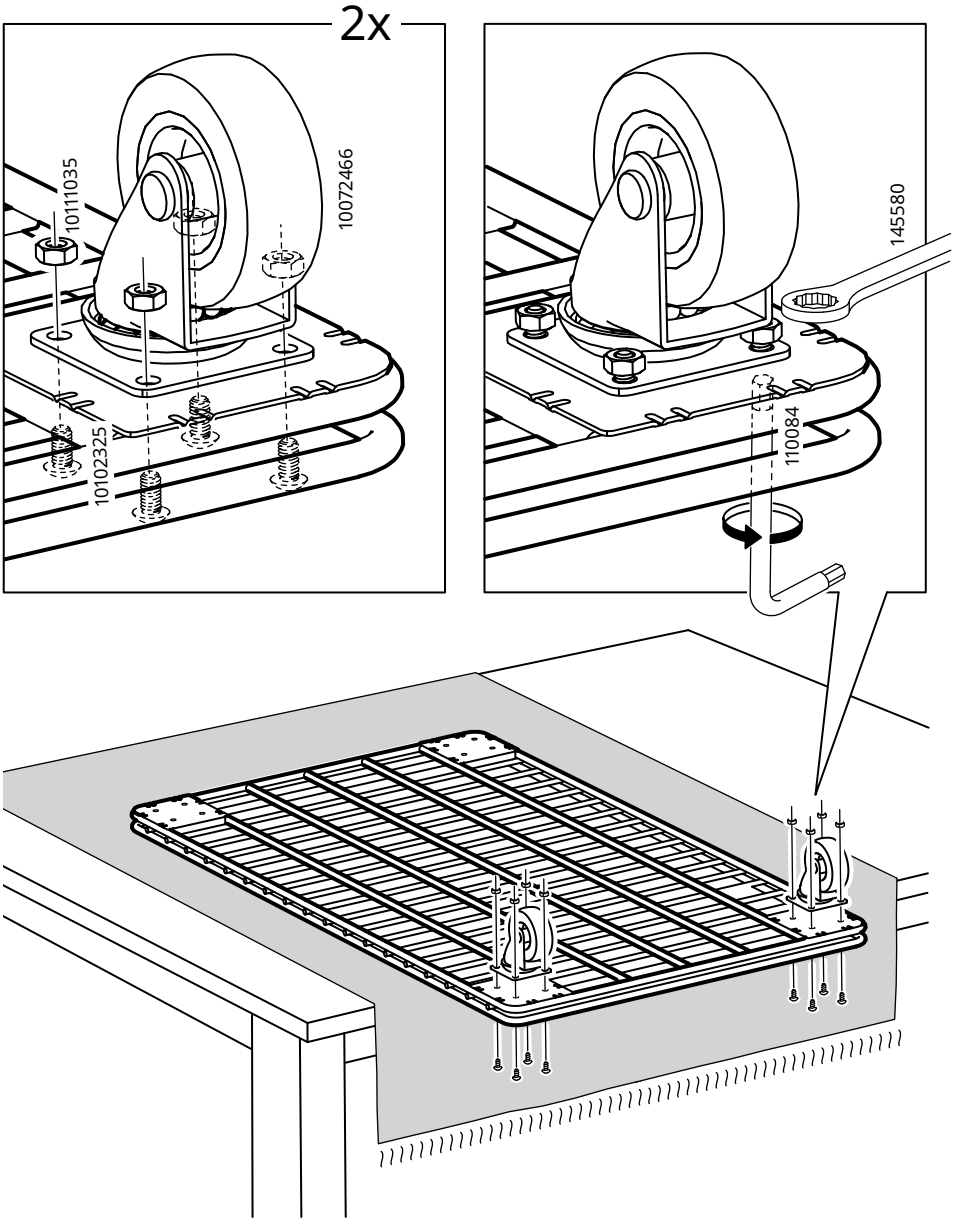

2

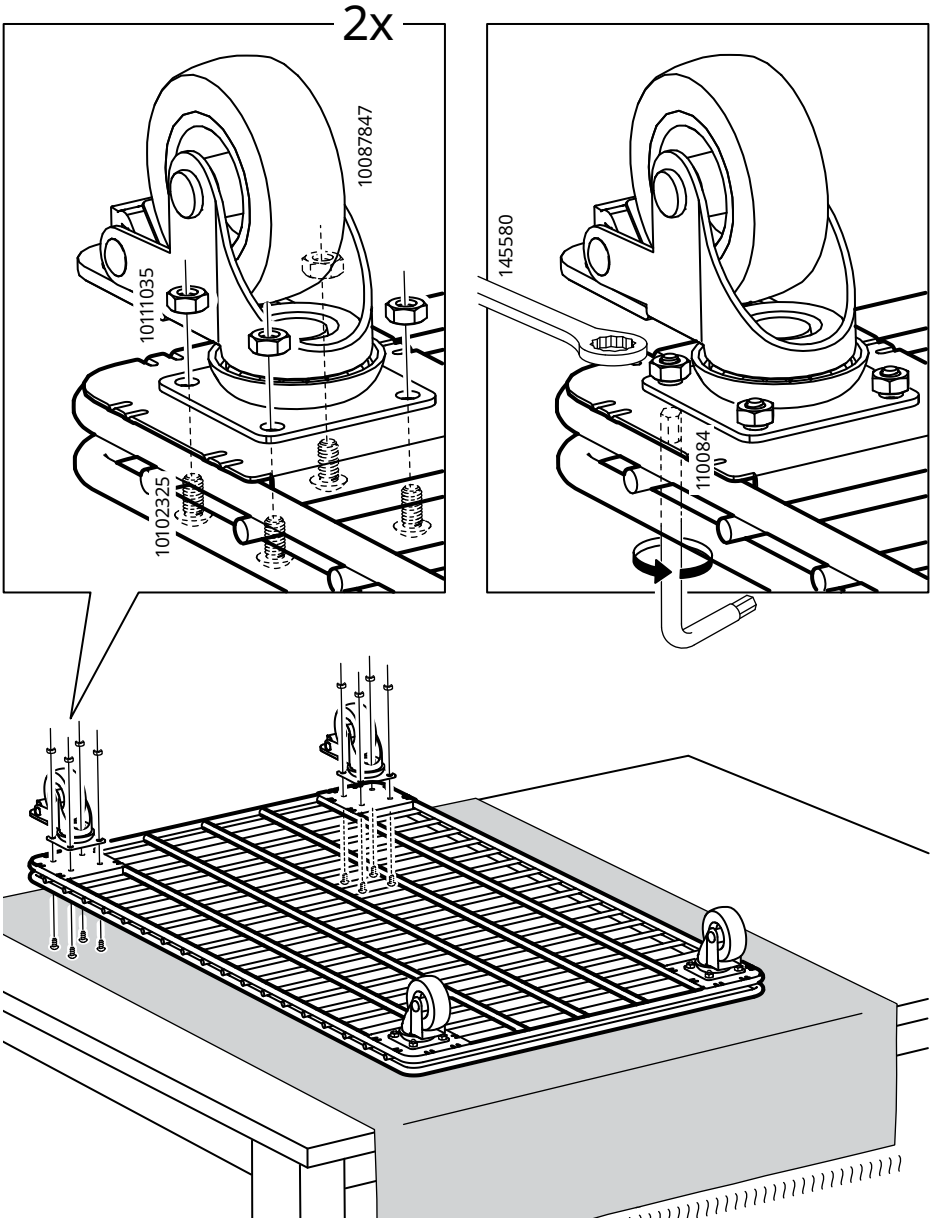

© Inter IKEA Systems B.V. 2023
2023-05-05 AA-2398591-2