BOLLSIDAN

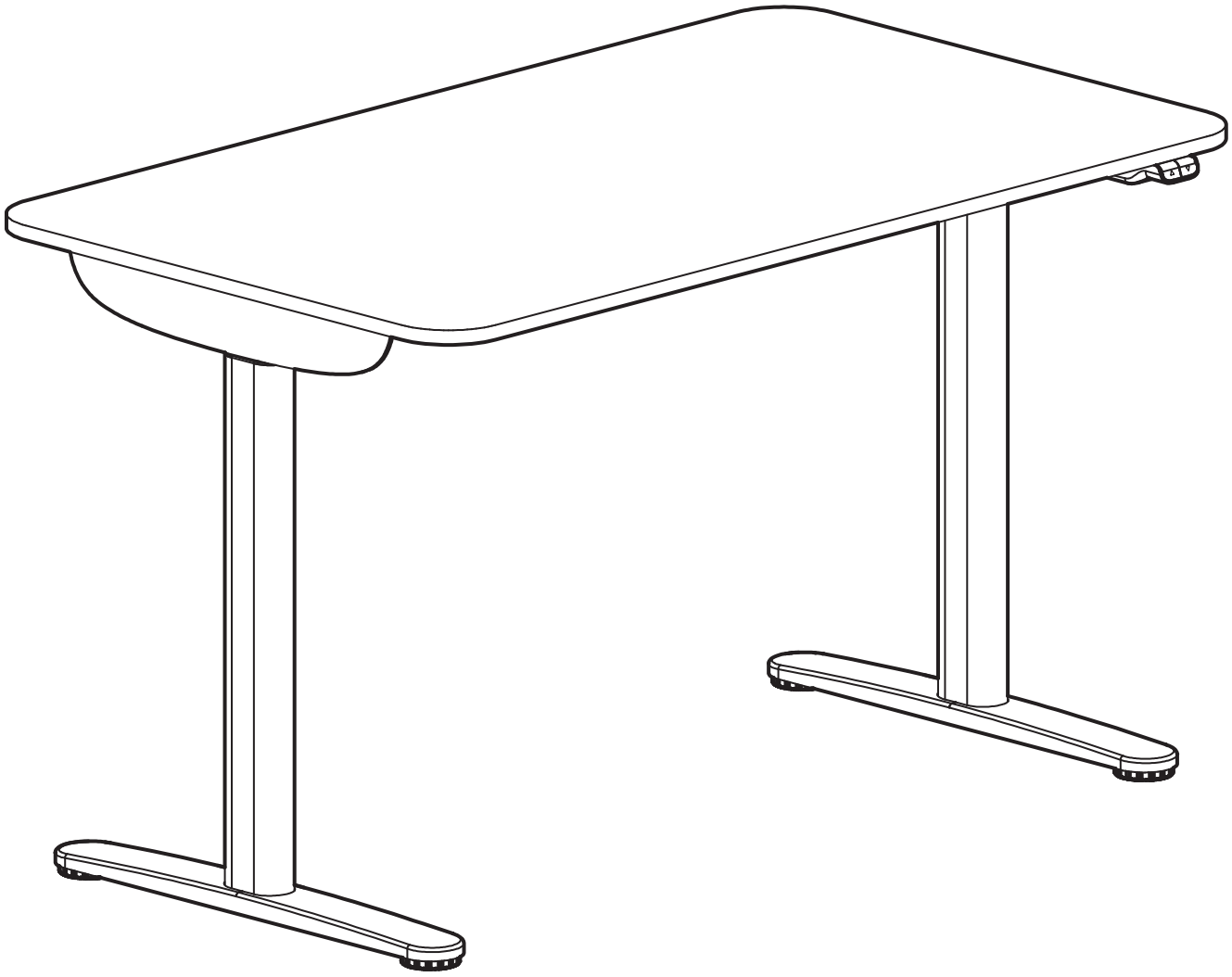

Design and Quality
IKEA of Sweden

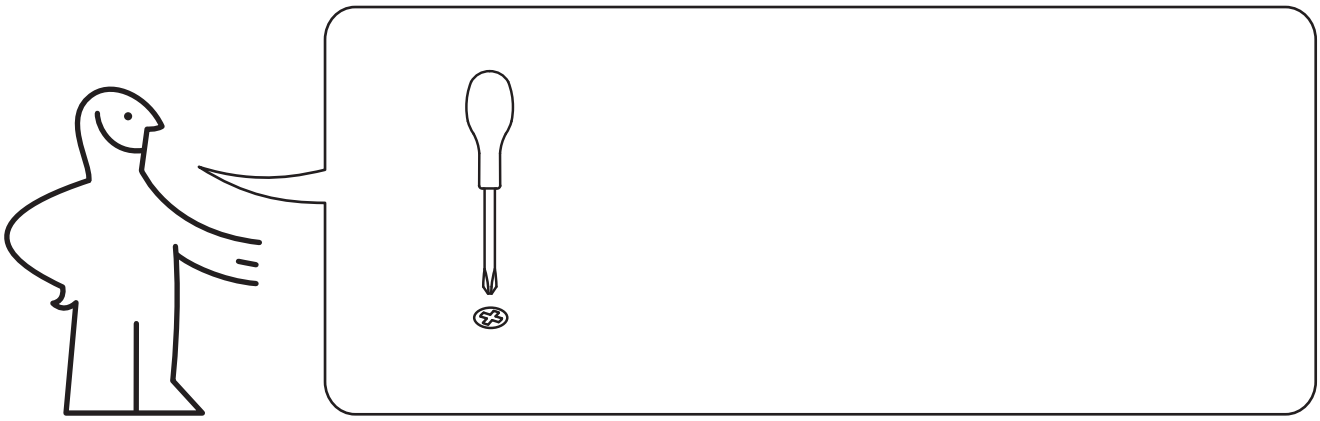

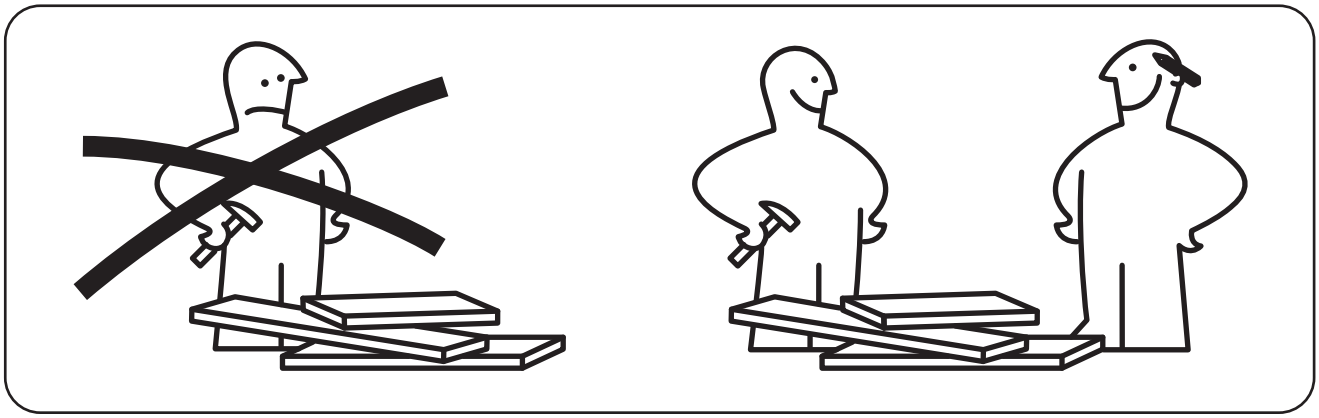

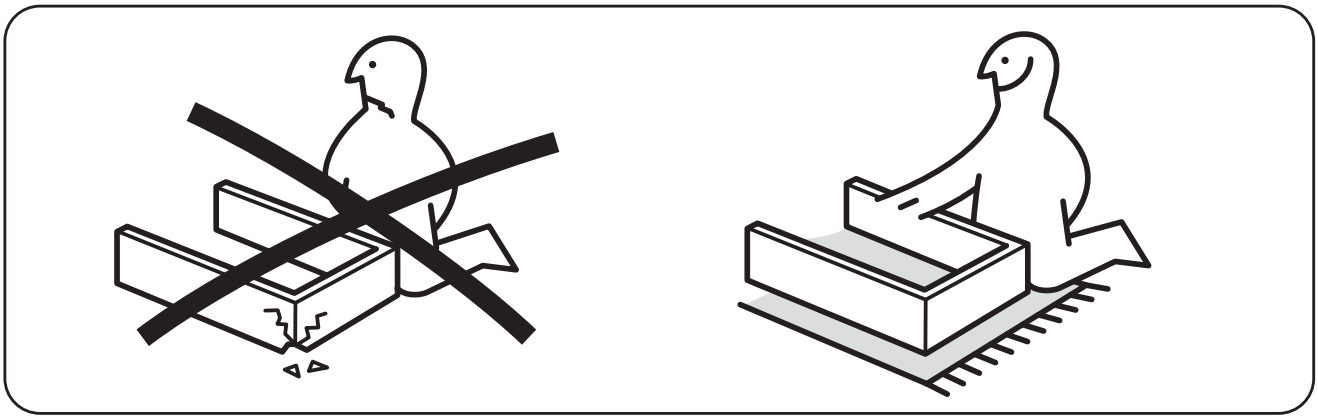

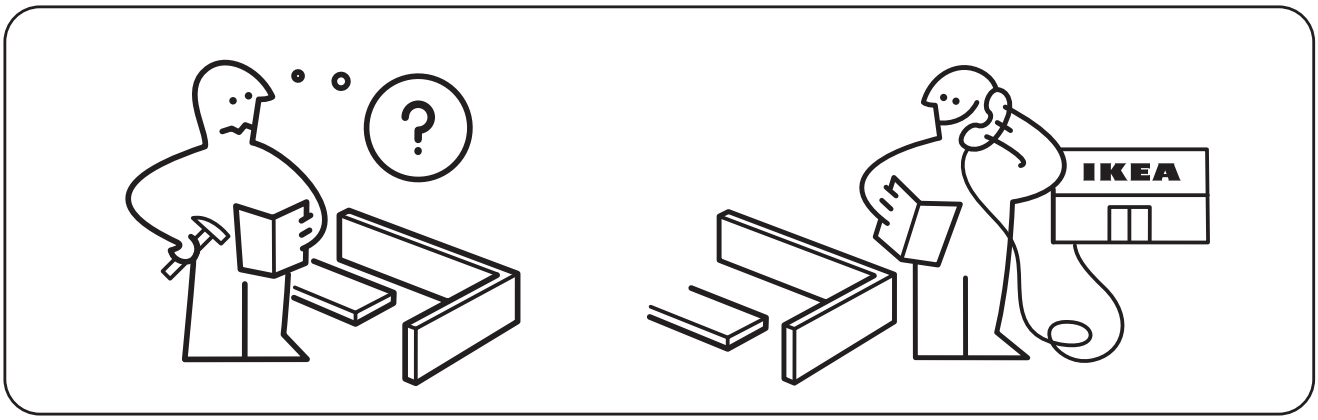
?
IKEA

4x

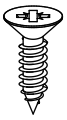

2x

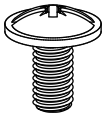

6x

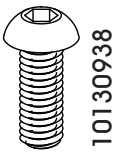

16x

14x

2x

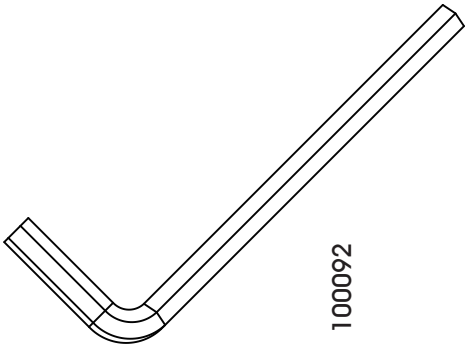

1x

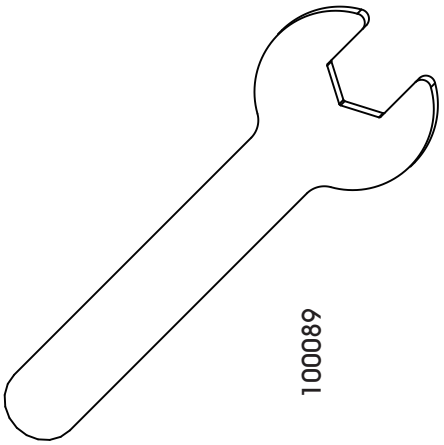

1x

6x

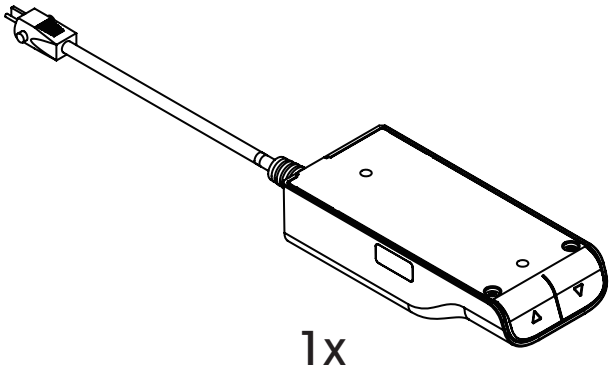

1x

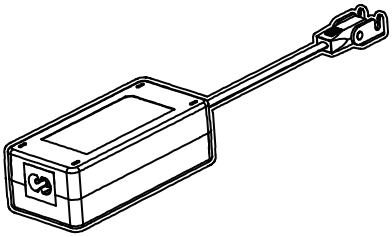

1x

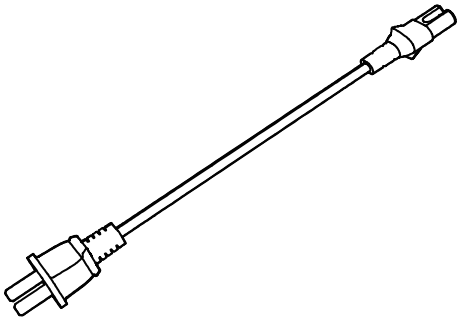

1x

1

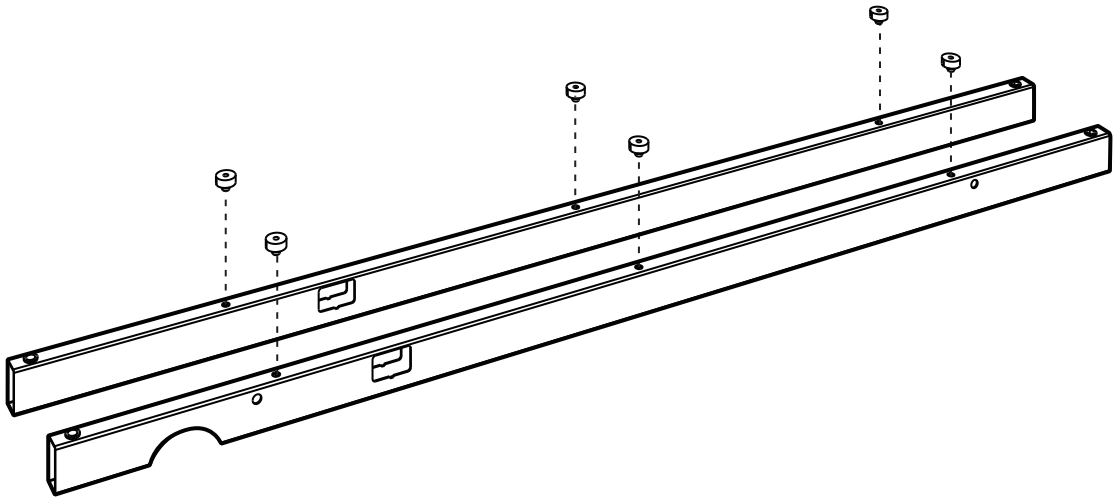

2

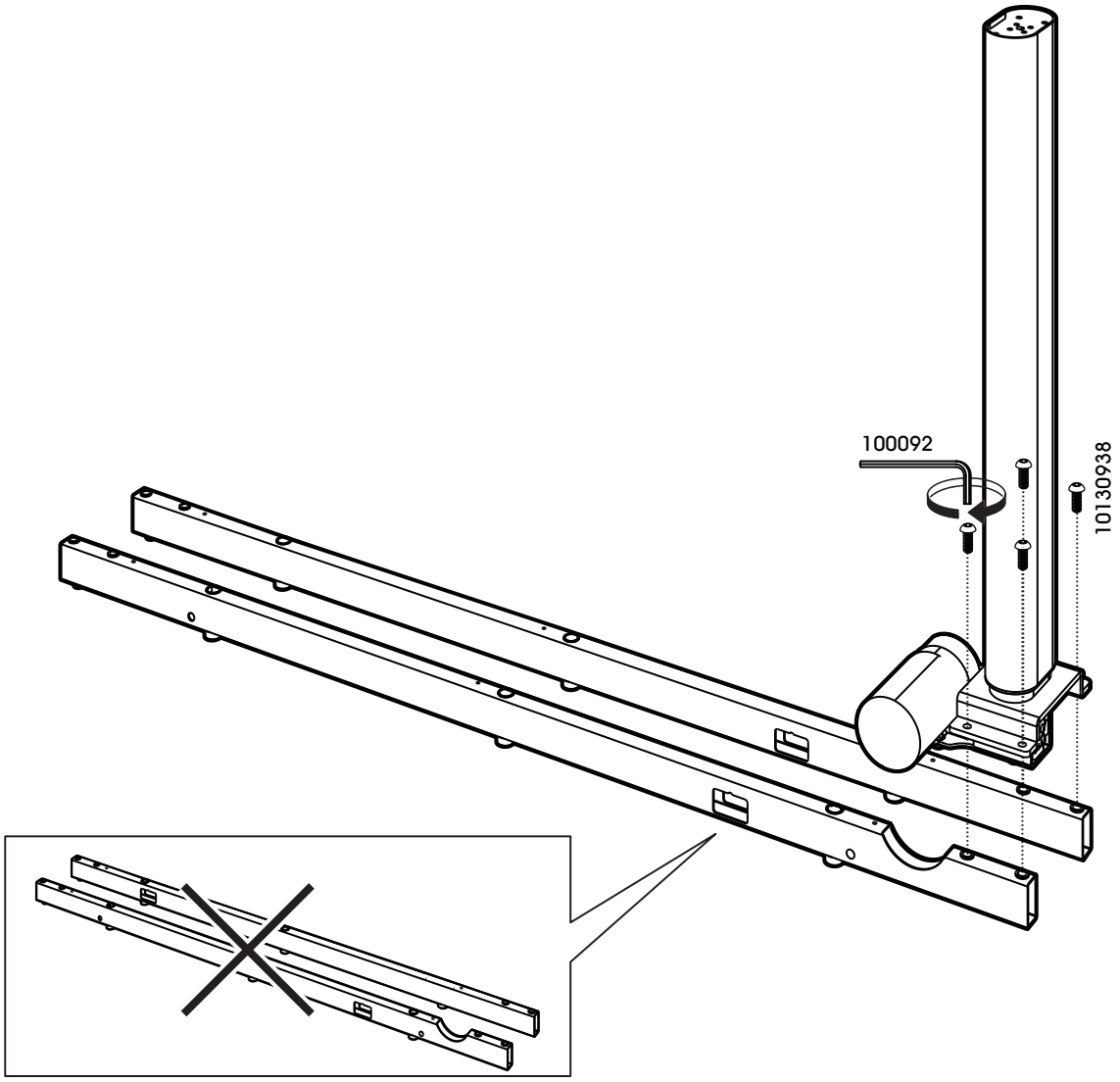

3

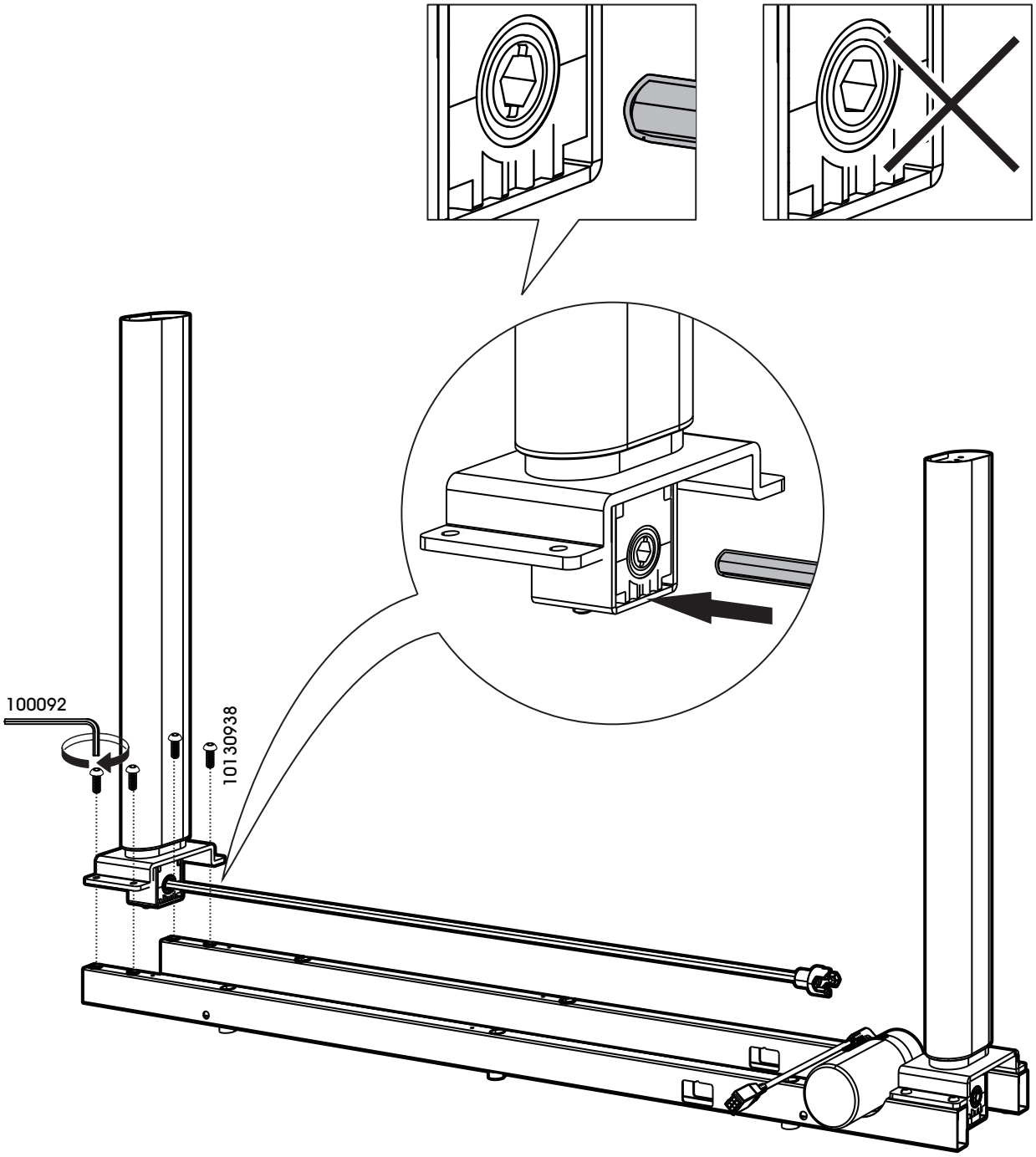

4

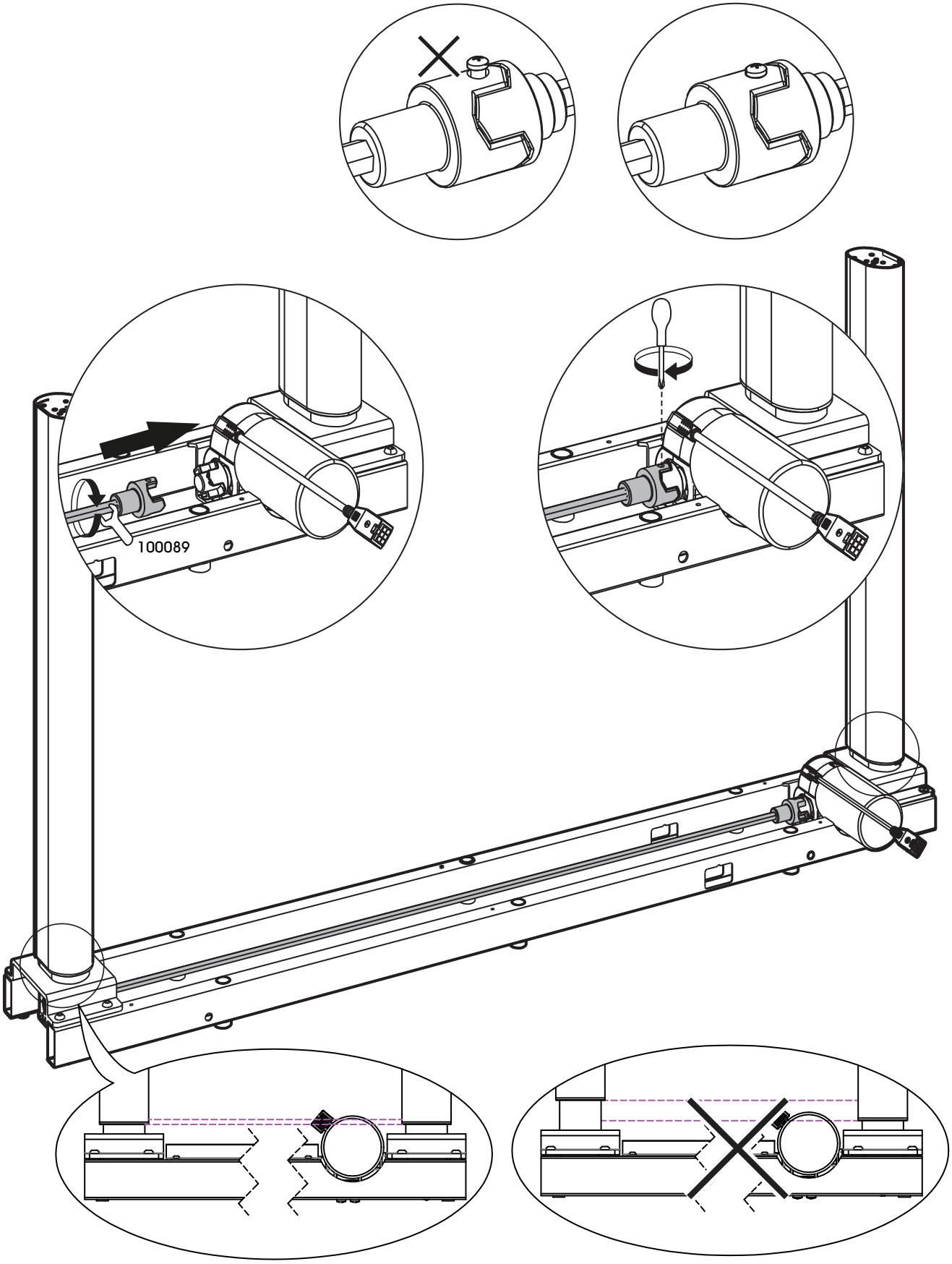

5

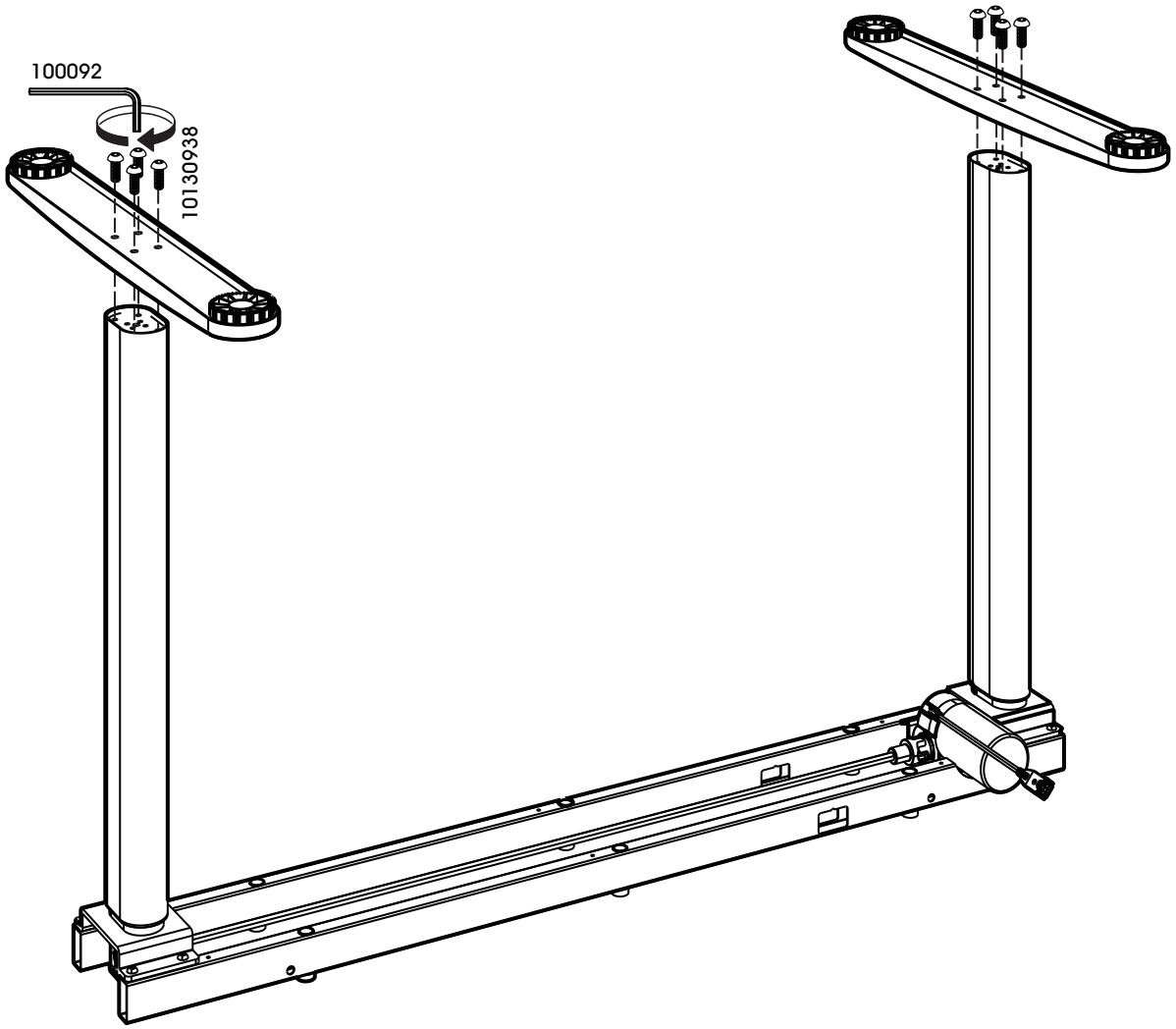

6

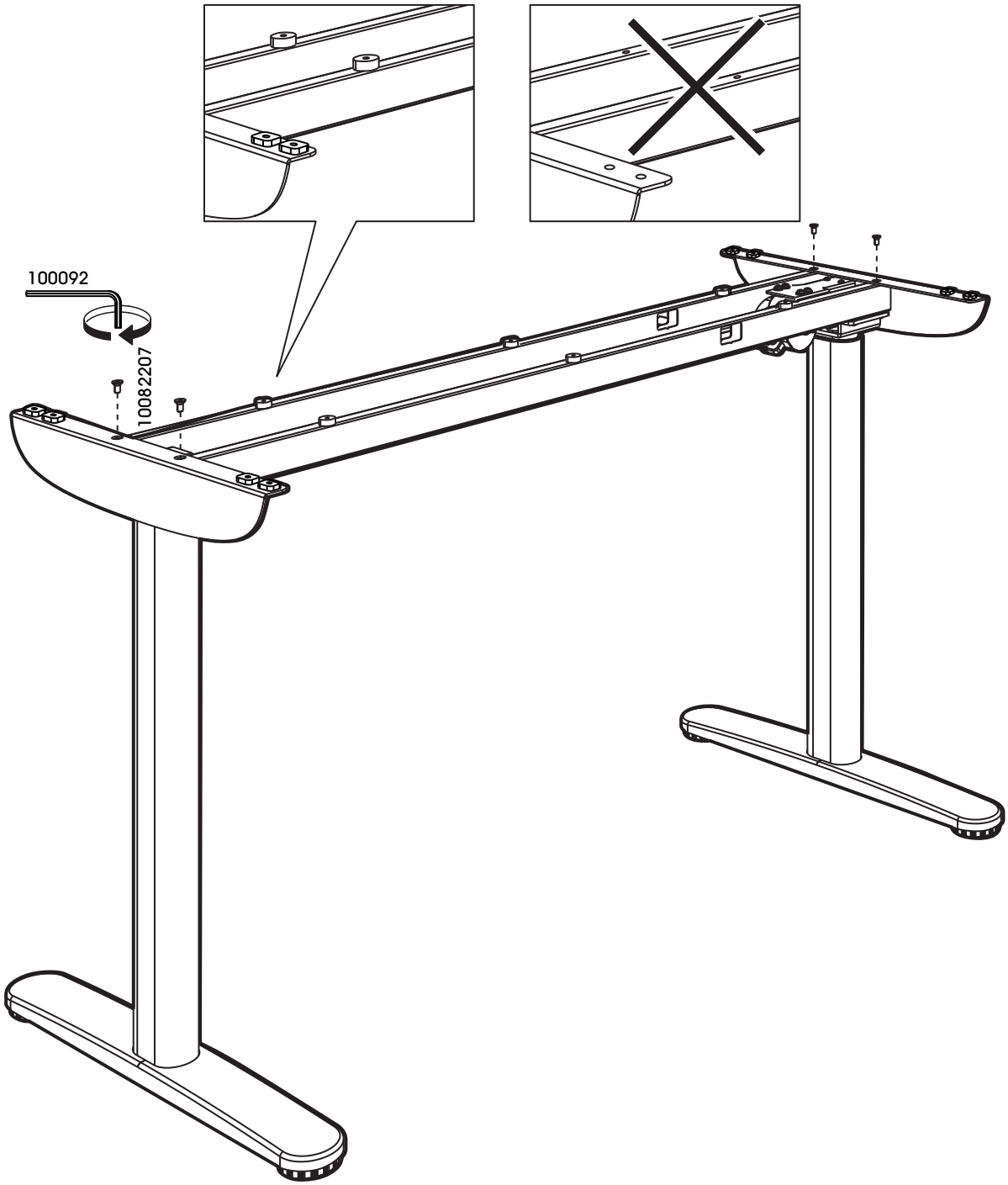

7

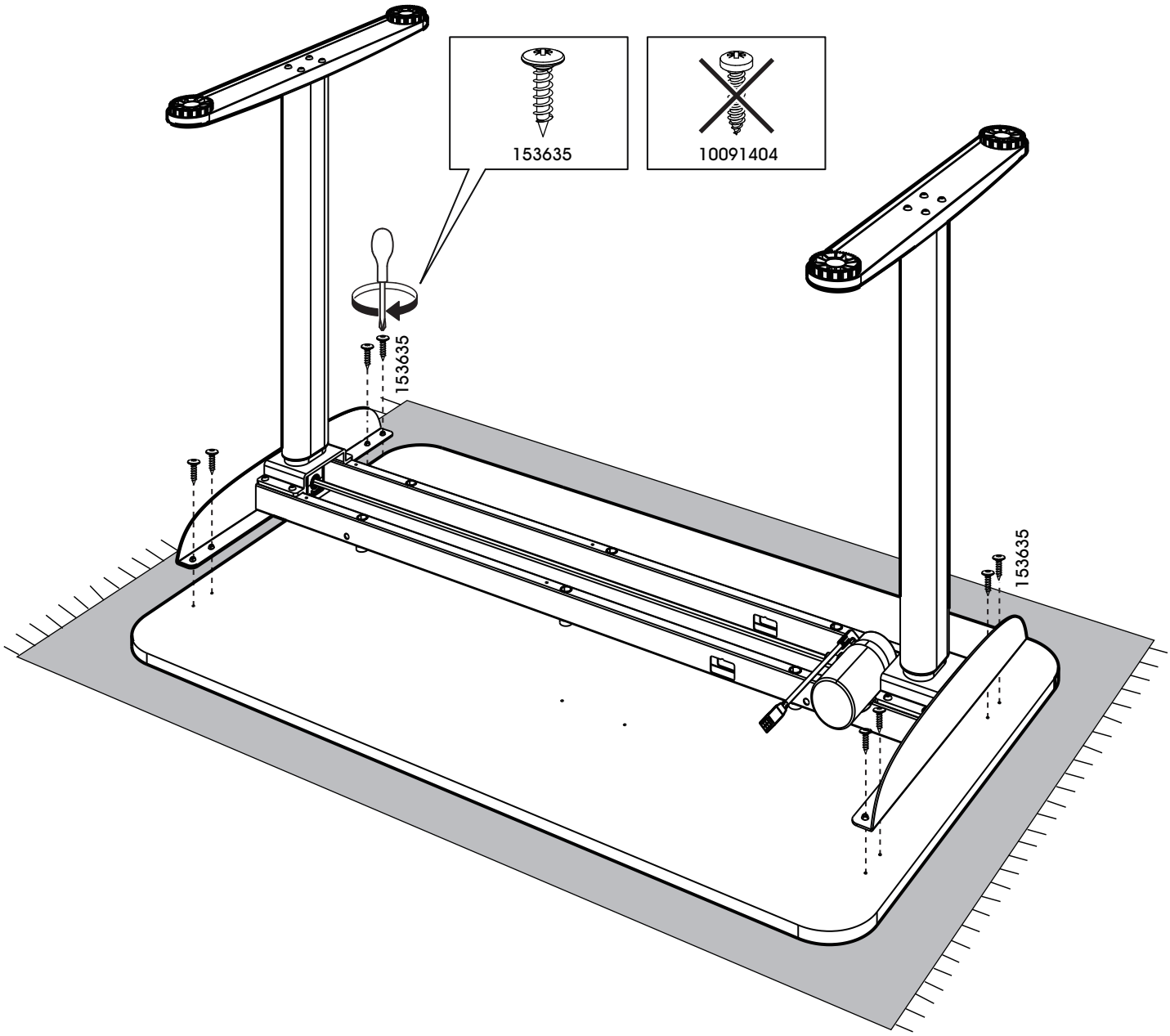

8

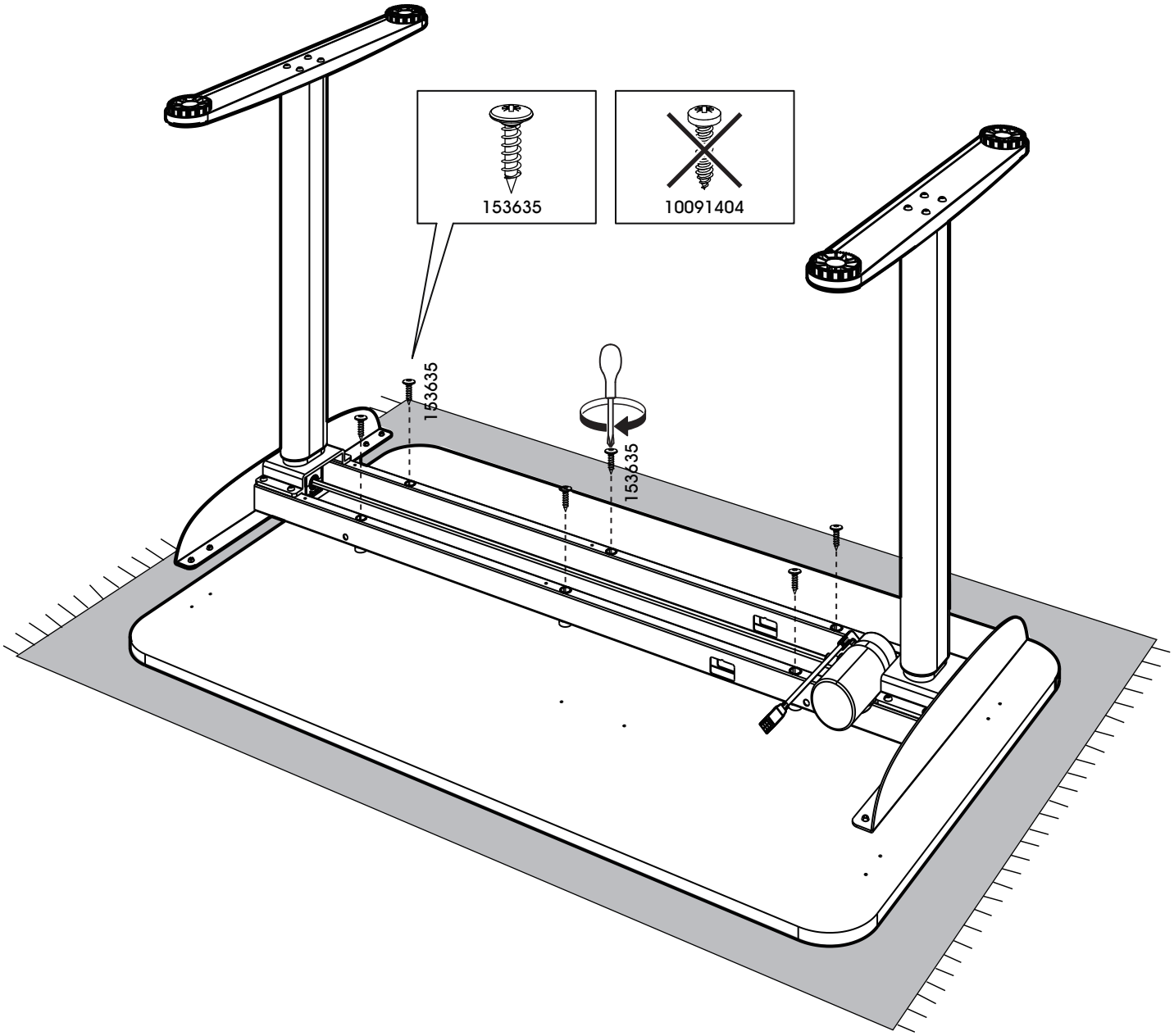

9

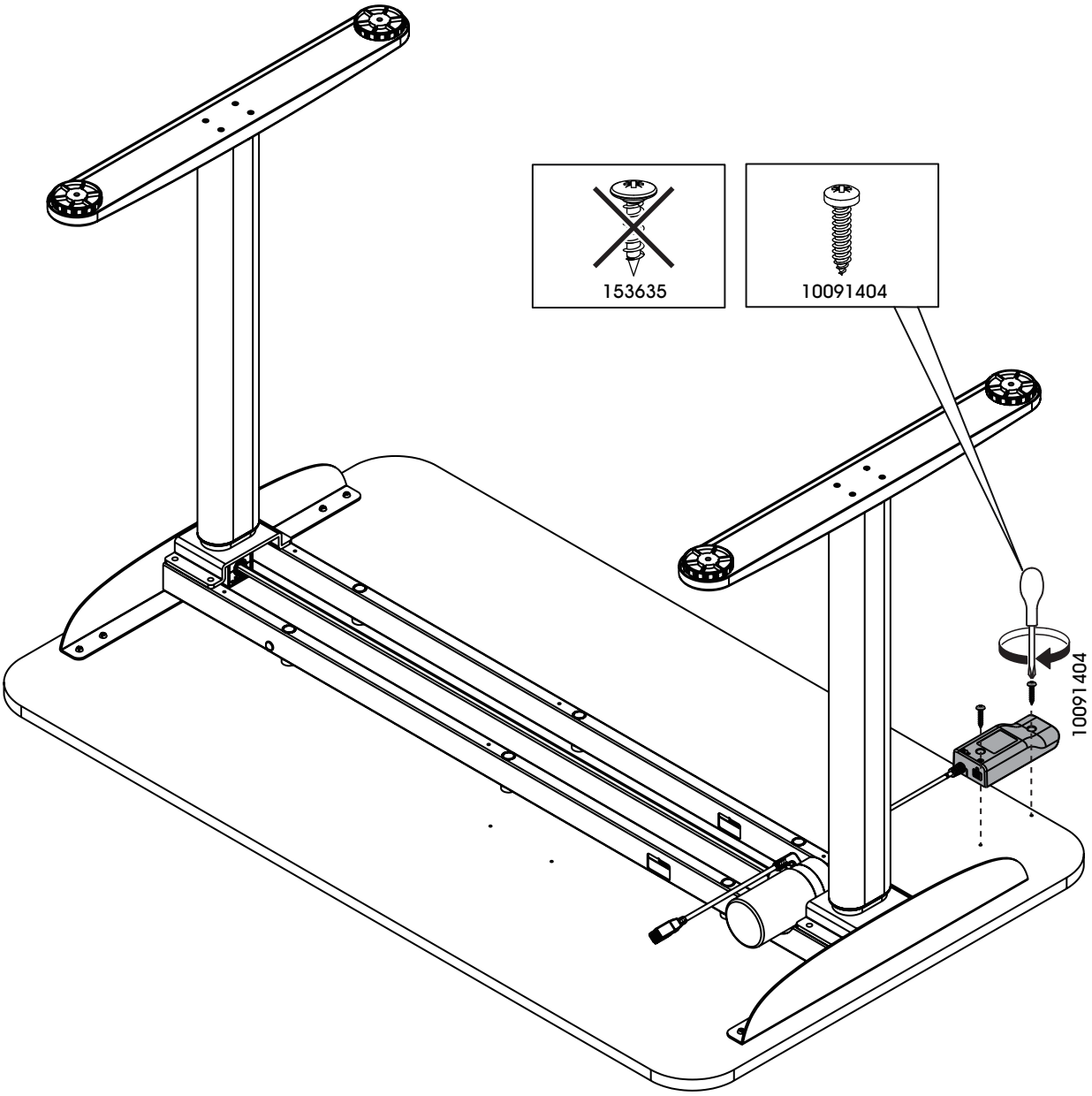

10

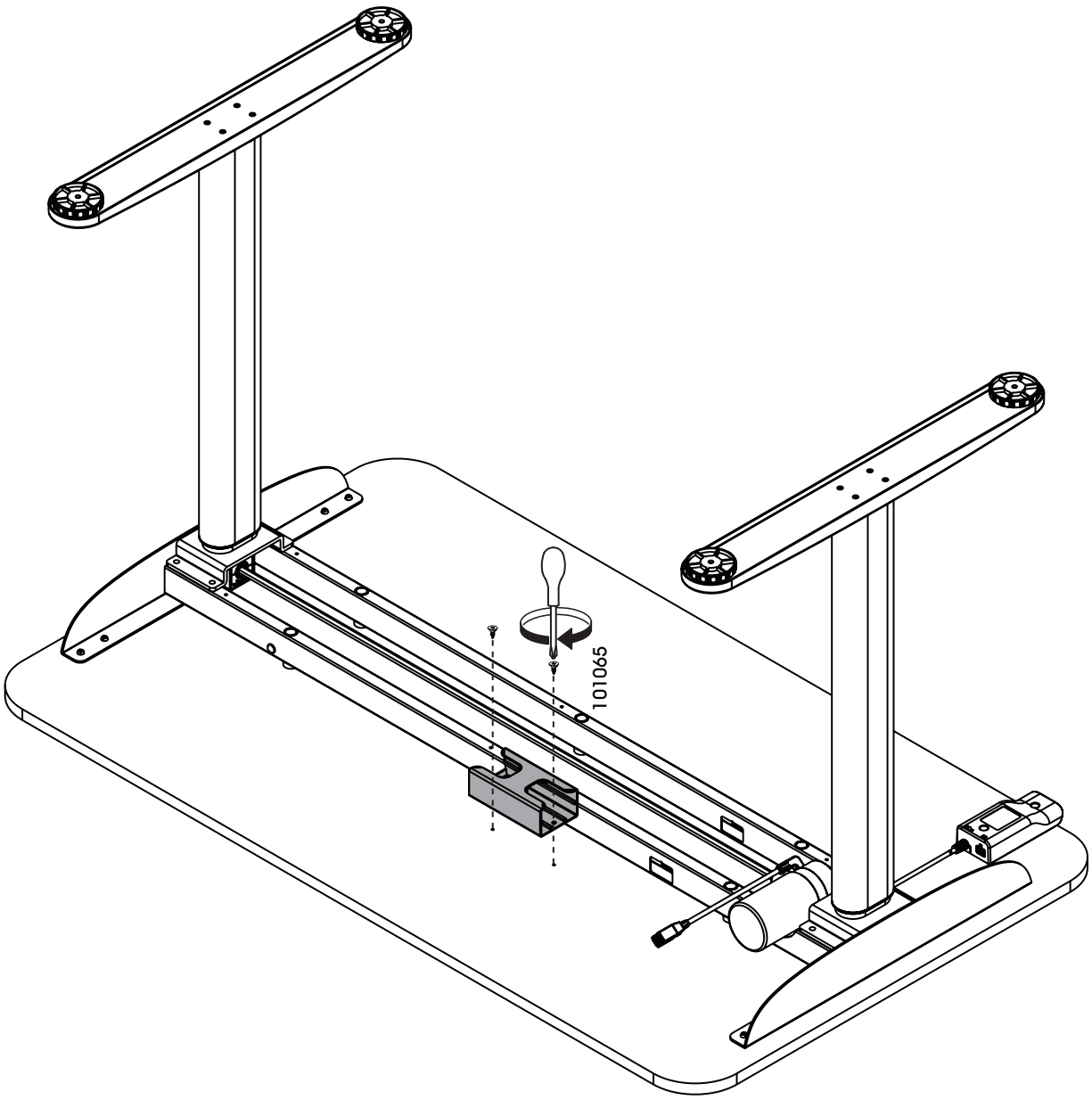

11

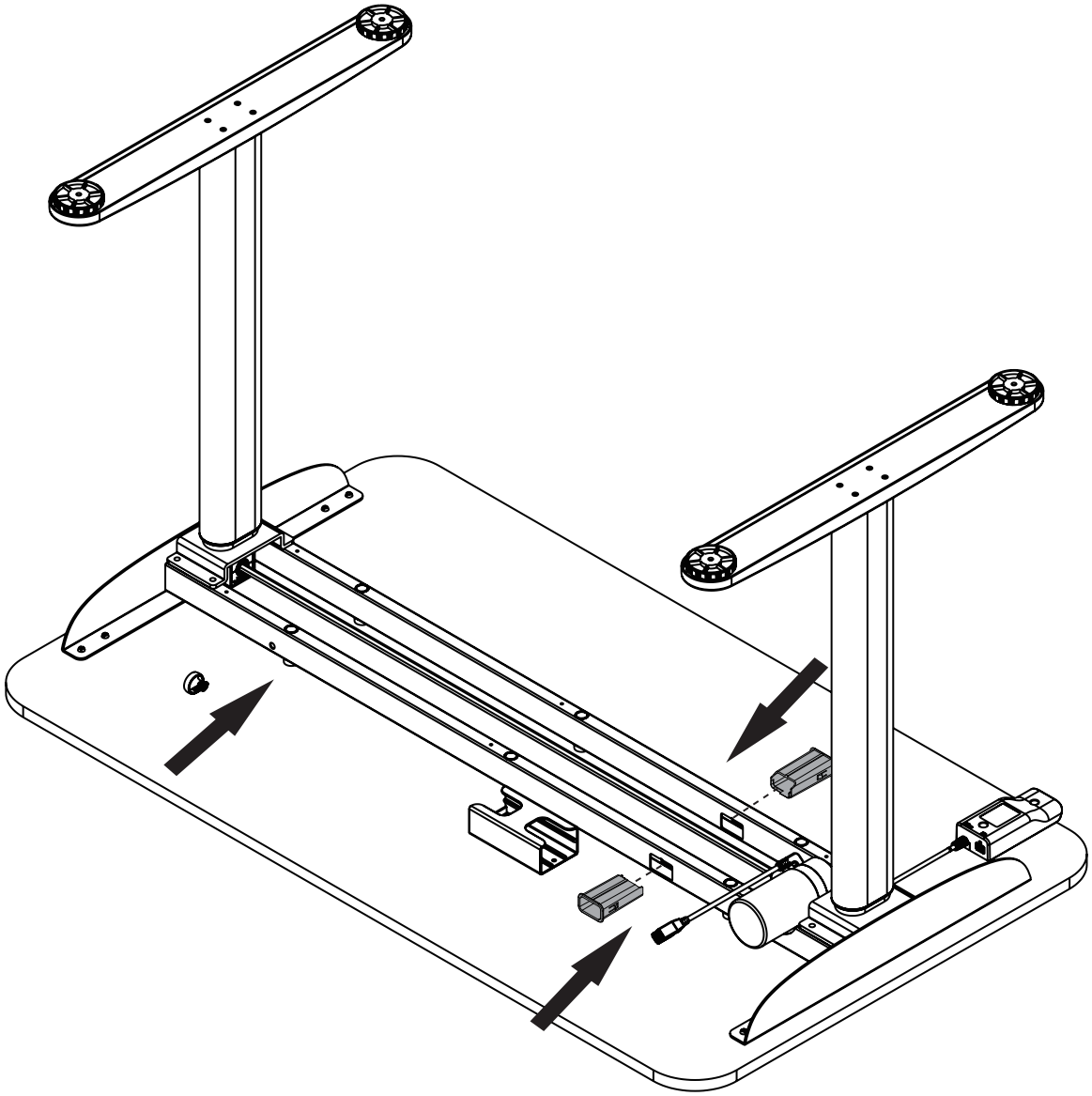

12

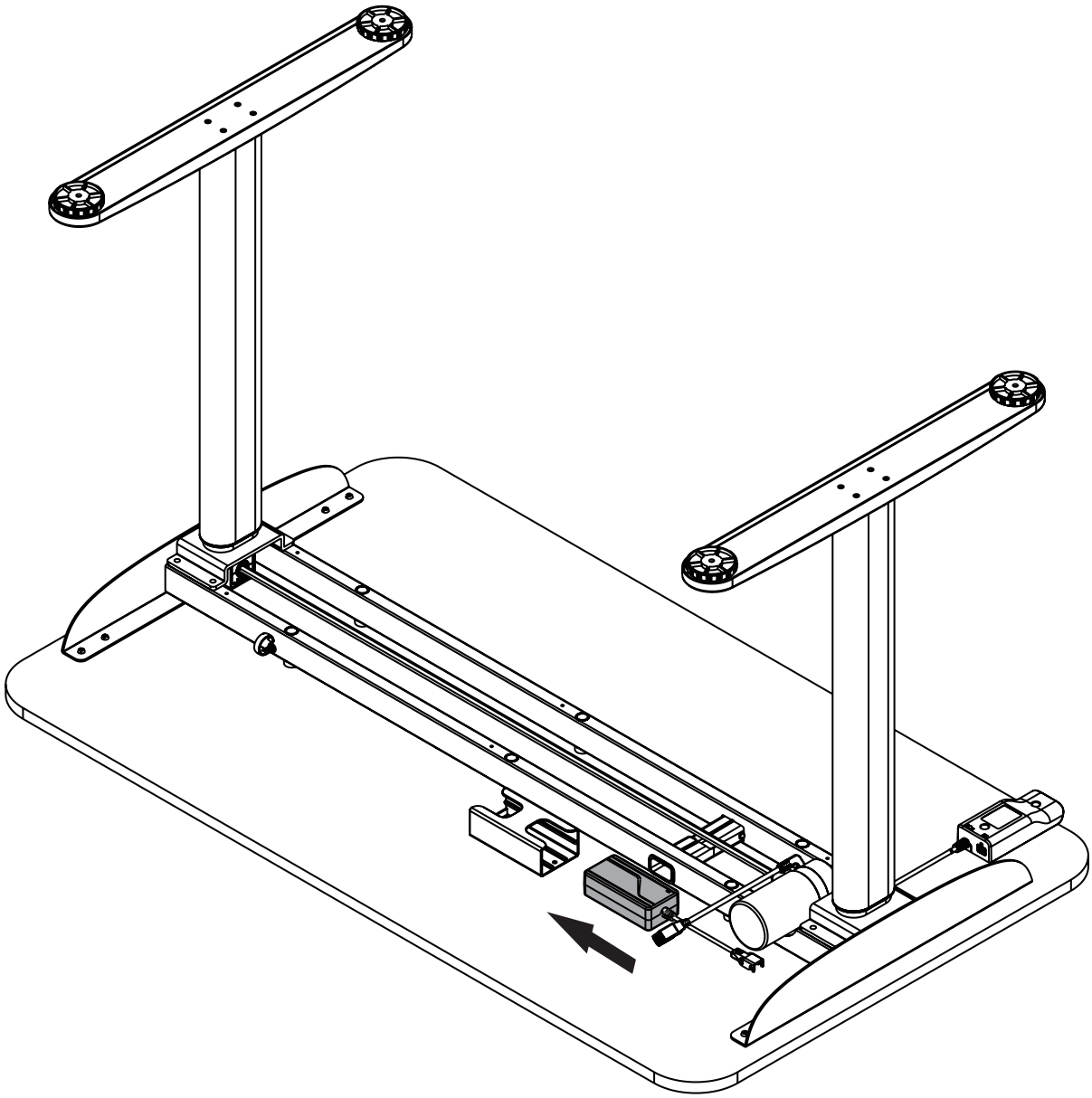

13

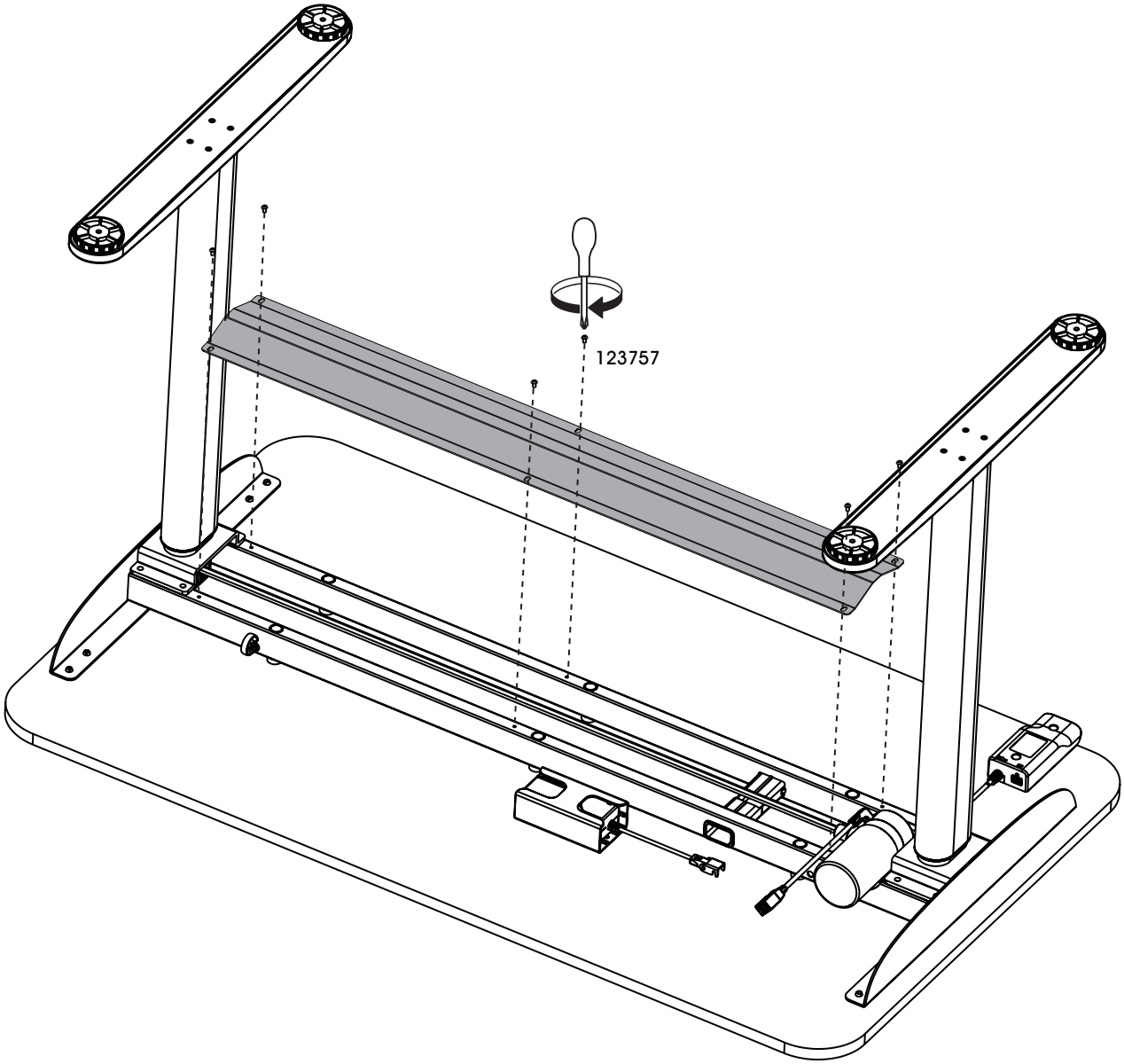

14

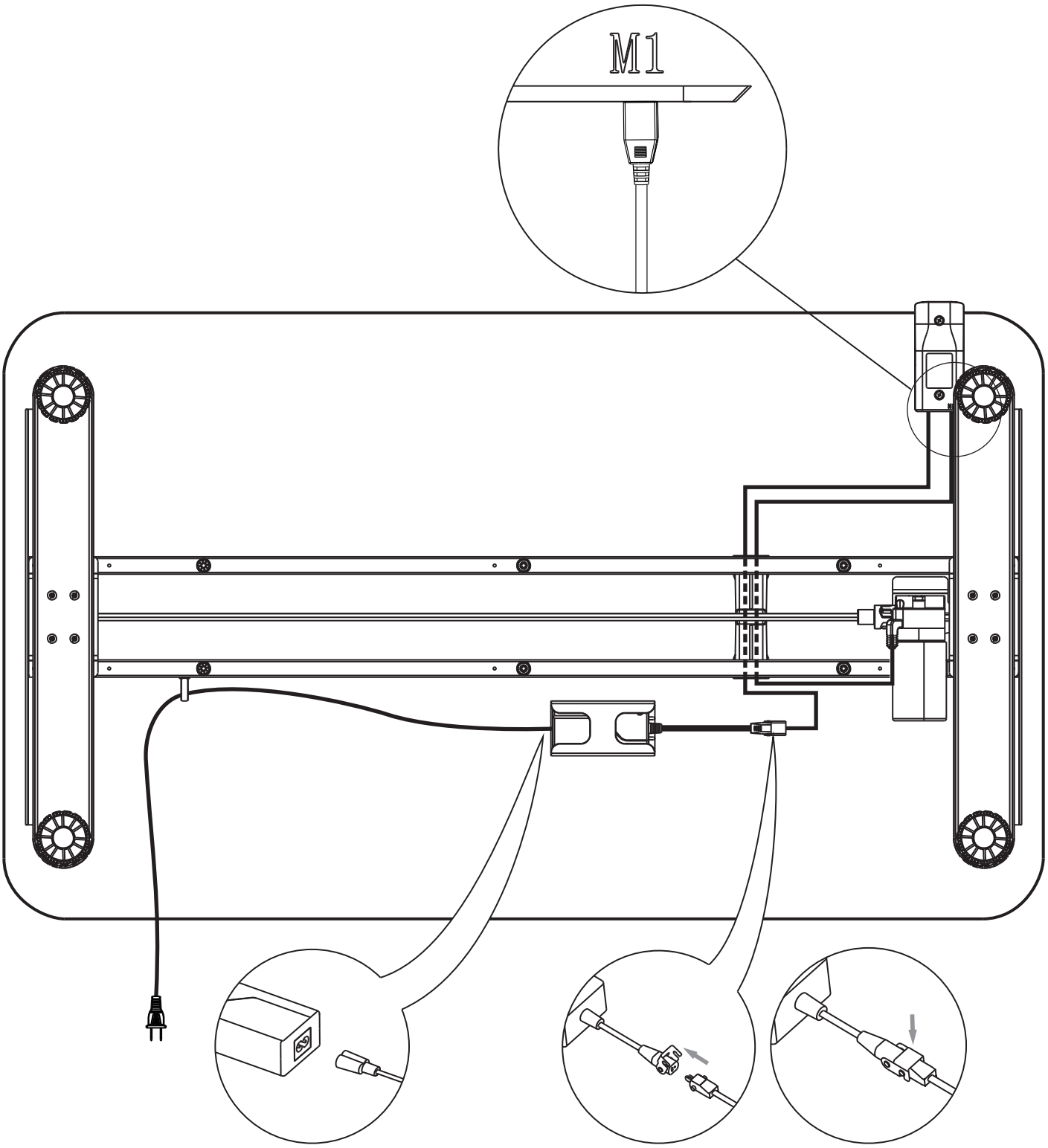

15

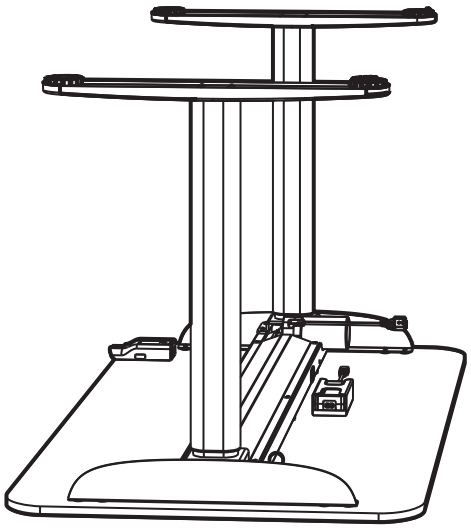

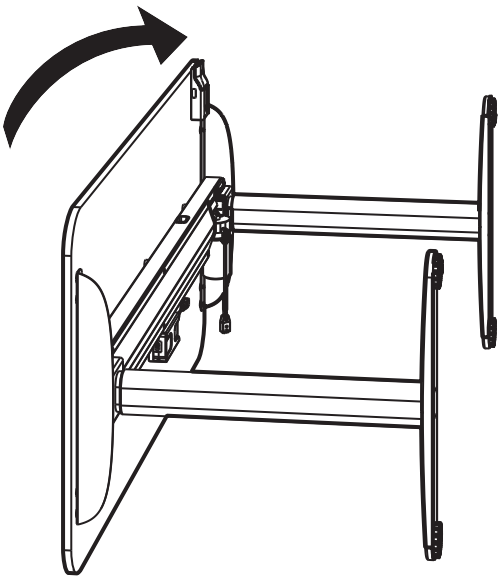

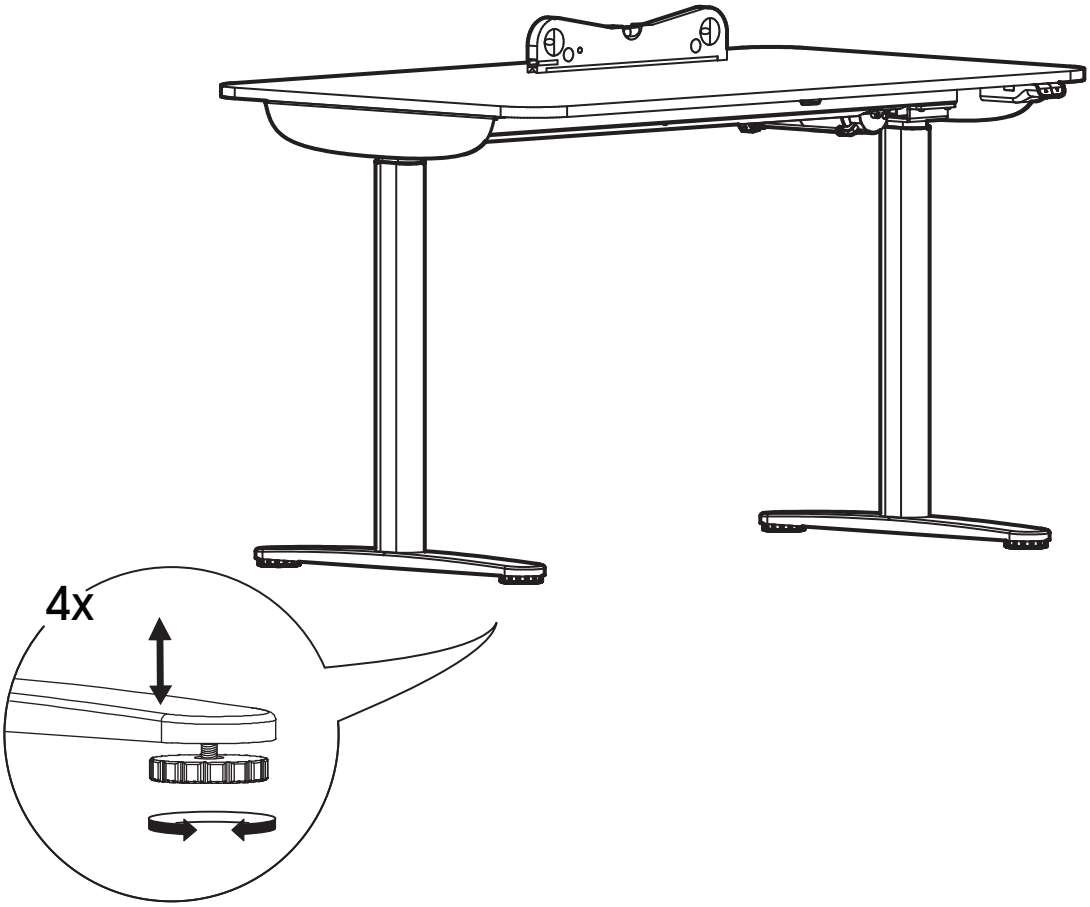

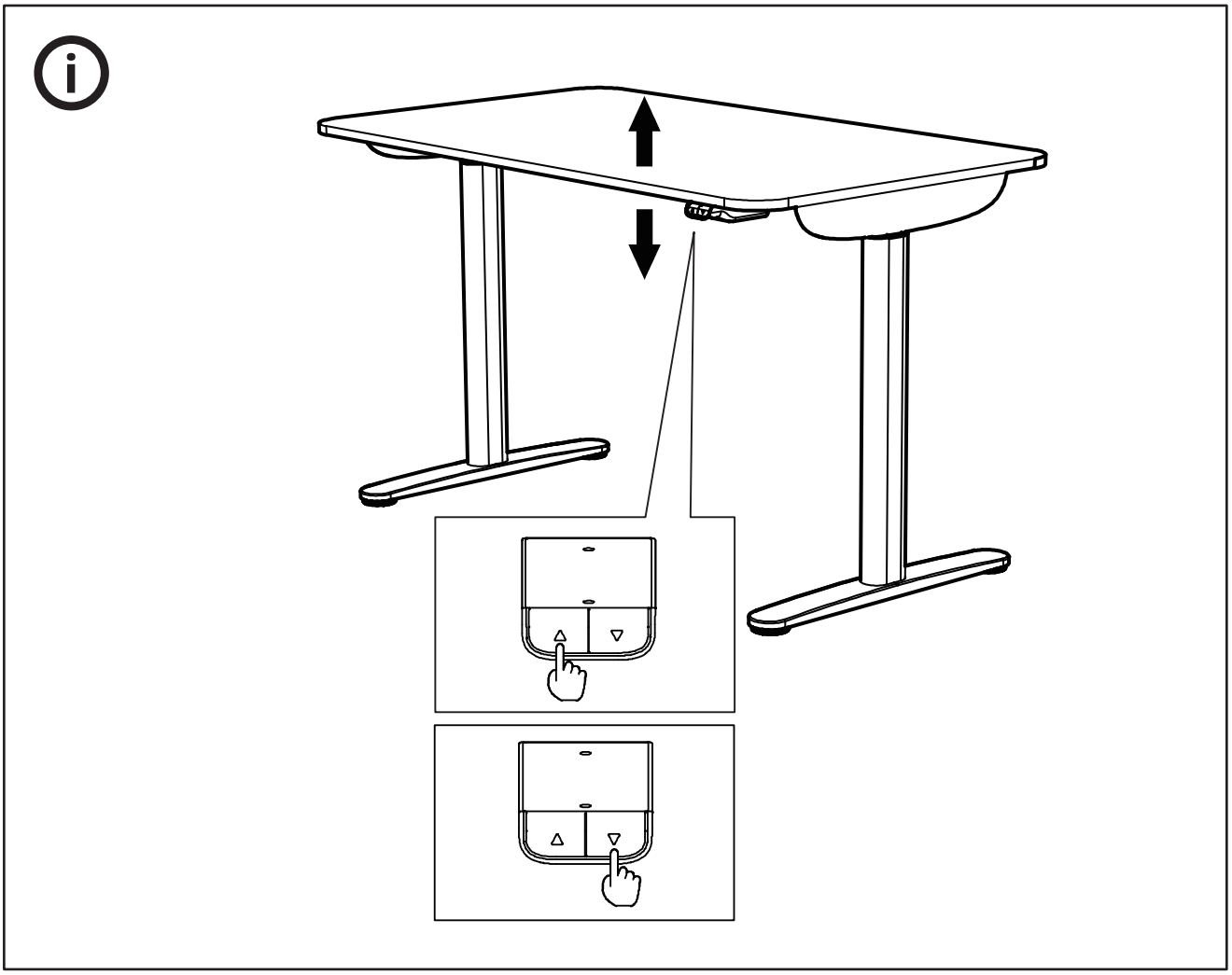

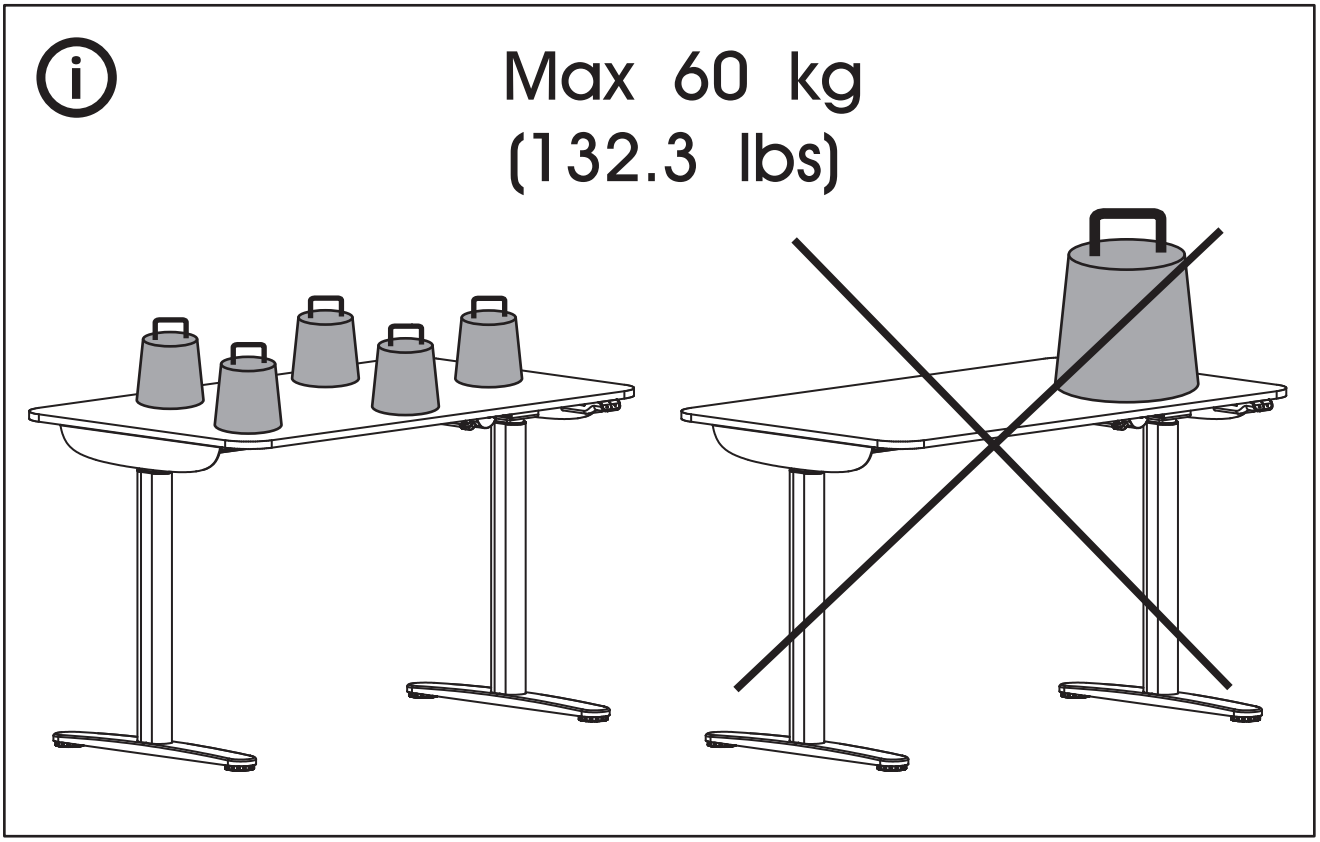
Max 60 kg
(132.3 lbs)

© Inter IKEA Systems B.V. 2023