HAVBÄCK
Bathroom series

Design
Sarah Fager

Safety
Must be secured to the wall for a safe installation. Different wall materials require different types of fixing devices. Use fixing devices suitable for the walls in your home, sold separately.

If you are uncertain about the installation, contact a professional. The installation shall be made in accordance with valid local building and plumbing regulations.

Ensure that the walls in your bathroom can support the weight of the vanity.

Care and cleaning
Wipe furniture clean with a cloth damped in water or a non abrasive detergent, then wipe dry with a clean cloth.

The sink and faucet should be wiped clean with a cloth damped in water or a non abrasive detergent.

Sinks in ceramic are resistant to most chemicals, except for strong acids and strong alkalis.

Sinks made of crushed marble should not come in contact with ammonia, acids, strong detergents, hair dye or chlorine.

10

HAVBÄCK bathroom series has a 10-year limited warranty. Read more in the warranty brochure.

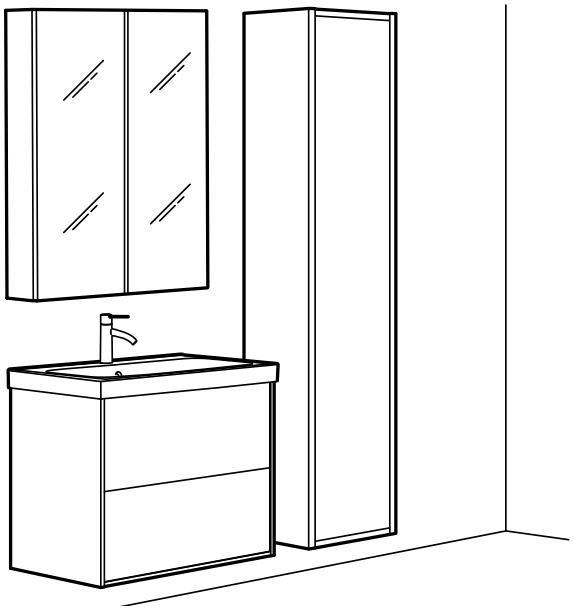

Beautiful in its simplicity
The HAVBÄCK family is created for people who value the sense of calm that comes with simple, uncomplicated design and function.
The clean, straightforward expression serves as the base, just add your choice of knobs, handles, countertop, sink, faucet and legs to create the spot-on solution for your style and taste.
Storing is effortless in cabinets that can be customized for a wide range of needs. Soft-closing doors and drawers enhance the feeling of quality and ease. With everything organized and neatly tucked away, you and your family can breeze through your morning routines. If you are sharing your bathroom with others, take a look at our double sinks and faucets that save you both time and precious water.

The included suspension rail makes it easier to mount the cabinet on the wall and the unique wedge dowels make assembly easy and the fittings nearly invisible.

HAVBÄCK furniture will withstand years of splashes and humidity and we guarantee it.

This is a reference guide created to better assist customers when purchasing products. While a high level of accuracy has been sought in its preparation, we cannot guarantee that there are no errors or omissions, nor will we be bound by them. Availability may vary by store. Please see an IKEA co-worker or visit www.IKEA.ca for more information.

Content

How to plan 03
How to combine 04
How to choose 05
HAVBÄCK combinations 07
HAVBÄCK all parts 12
Other furniture 13
Accessories 14
Sinks and faucets 14
Lighting 16
Services 17
Guidance/Shop at IKEA 17

How to plan

What do you want to store?
Start by thinking what storage needs you have in your bathroom. Think of the activities that happen in your bathroom like laundry, shower, clean and care. How many people use the bathroom and when is the rush hour usually? Based on the activities and amount of people you can plan how many storage units will best suit your needs. Think about the wall space you have available for a vanity and sink, since this is the centre of most bathroom activities. The HAVBÄCK series comprises vanities of different sizes, wall cabinet and high cabinet. The drawers in HAVBÄCK vanity are smooth running and pull out fully so you can easily see and reach what's inside. Pull-out stops prevent the drawers from being pulled out too far and falling, which is especially practical if you have children. All doors and drawers are equipped with soft closing function which makes the mornings and evenings quiet. Fixed dividers that are a perfect fit together with our organizers VISSLAÅN and BOLLÖSUND.

Choose the expression
After you have decided on the size of the vanity, you can choose between different colours and find the one that suits your style. The vanities need to be mounted to the wall, and you choose to have it with or without supporting legs.
Then you need to choose a sink, where you can choose a single, double, semi-recessed or vessel sink, depending on your needs and space. The sinks are made of ceramic or crushed marble. Ceramic sinks have a glazed finish and are easy to clean. They have excellent scratch resistance and are very durable. Crushed marble is comprised mainly of crushed minerals with binding agents. Crushed marble sinks are smooth, durable and easy to clean.

All integrated and semi-recessed sinks are sold without water trap, but we have created combinations with the water trap included to make it easier for you to buy, all to be found in this buying guide. All vessel sinks come with the water trap included. A pop-up plug is always included with the integrated and semi-recessed sinks.

If you choose a semi-recessed or vessel sink you need to combine the vanity with a countertop. IKEA countertops have been developed with special attention to quality, so they are water resistant, durable and will last a long time. They come in different sizes that match the vanities perfectly. Choose the look that suits you and your bathroom best.

You can find a wide selection of sink faucets at IKEA. Choose your faucet based on function and design. All faucets have a flow regulator that uses less water but ensures that the water flow feels the same. Most of our faucets have a special function – a cold start function that helps you save energy.

Like putting icing on the cake – add knobs or handles to create the spot-on solution for your style and taste. The small details that make a big difference.

The last thing to decide is what to put above and around your sink: mirror, mirror cabinet, high cabinet or wall cabinet. The combination possibilities are endless. Make your choice based on your bathroom storage needs, space and style.

How to combine

Here is a guide to explain how you can put together your very own HAVBÄCK bathroom solution.
For all the parts and pieces see page 12. If you want to browse our ready-made solutions just check IKEA.ca.

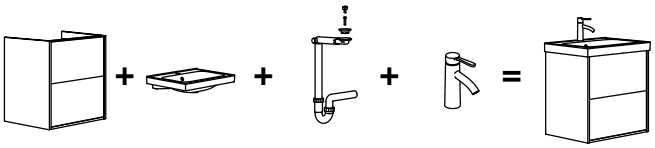

To build a vanity with integrated sink you need to have a vanity, sink, water trap and faucet.

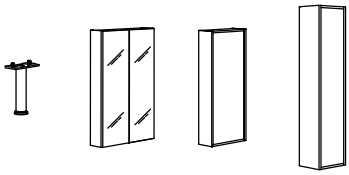

For additional support, add legs to the front of each cabinet. Complete your bathroom solution with a mirror, mirror cabinet, wall cabinet or high cabinet – all according to your need.

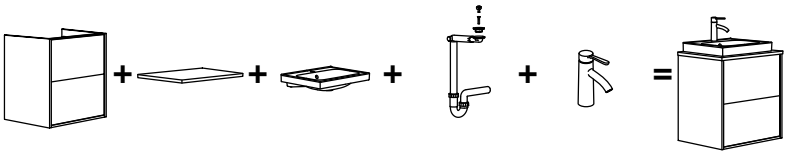

To build a vanity with semi-recessed or vessel sink* you need to have a vanity, countertop, sink, water trap and faucet.

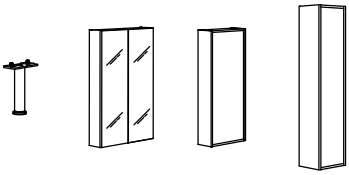

For additional support, add legs to the front of each cabinet. Complete your bathroom solution with a mirror, mirror cabinet, wall cabinet or high cabinet – all according to your need.

* Vessel sink have the water trap included.

How to choose vanity and sink

Vanity width	ORRSJÖN	BACKSJÖN	RUTSJÖN	ORRSJÖN/BACKSJÖN/ RUTSJÖN semi-recessed sink + countertop	ORRSJÖN deep sink	TÖRNVIKEN + countertop	OXMYREN + countertop	KATTEVIK + countertop
24” (61cm)	**25×21¾”** (64×55cm) 295.169.08	**24⅛×21”** (61×53cm) 295.170.07	**25¼×21⅞”** (64×56cm) 195.170.22	**20”** (51cm) ORRSJÖN 495.169.12 BACKSJÖN 295.170.12 RUTSJÖN 495.170.25	**25×21¾”** (64×56cm) 295.169.13	**17¾“** (45cm) 302.915.16	**22×13¾“** (56×35cm) 504.990.25	**15¾“** (40cm) White 703.589.44
24” (61cm)	**25×21¾”** (64×55cm) 295.169.08	**24⅛×21”** (61×53cm) 295.170.07	**25¼×21⅞”** (64×56cm) 195.170.22	**20”** (51cm) ORRSJÖN 495.169.12 BACKSJÖN 295.170.12 RUTSJÖN 495.170.25	—	**17¾“** (45cm) 302.915.16	**22×13¾“** (56×35cm) 504.990.25	**15¾“** (40cm) White 703.589.44
30” (76cm)	**31×21¾”** (79×55cm) 895.169.05	**30⅛×21”** (76×53cm) 095.170.08	**31⅜×21⅞”** (80×56cm) 995.170.23	**20”** (51cm) ORRSJÖN 495.169.12 BACKSJÖN 295.170.12 RUTSJÖN 495.170.25	—	**17¾“** (45cm) 302.915.16	**22×13¾“** (56×35cm) 504.990.25	**15¾“** (40cm) White 703.589.44
30” (76cm)	**31×21¾”** (79×55cm) 895.169.05	**30⅛×21”** (76×53cm) 095.170.08	**31⅜×21⅞”** (80×56cm) 995.170.23	**20”** (51cm) ORRSJÖN 495.169.12 BACKSJÖN 295.170.12 RUTSJÖN 495.170.25	—	**17¾“** (45cm) 302.915.16	**22×13¾“** (56×35cm) 504.990.25	**15¾“** (40cm) White 703.589.44
36” (91cm)	**37×21¾”** (94×55cm) single 695.169.06 double 095.169.09	**36⅛×21”** (92×53cm) 695.170.10	**37⅜×21⅞”** (96×56cm) 795.170.24	**20”** (51cm) ORRSJÖN 495.169.12 BACKSJÖN 295.170.12 RUTSJÖN 495.170.25	—	**17¾“** (45cm) 302.915.16	**22×13¾“** (56×35cm) 504.990.25	**15¾“** (40cm) White 703.589.44
48” (122cm)	**49×21¾”** (125×55cm) double 895.169.10	**48⅛×21”** (122×53cm) 495.170.11	—	**20”** (51cm) ORRSJÖN 495.169.12 BACKSJÖN 295.170.12 RUTSJÖN 495.170.25	—	**17¾“** (45cm) 302.915.16	**22×13¾“** (56×35cm) 504.990.25	**15¾“** (40cm) White 703.589.44
48” (122cm)	**49×21¾”** (125×55cm) double 895.169.10	**48⅛×21”** (122×53cm) 495.170.11	—	**20”** (51cm) ORRSJÖN 495.169.12 BACKSJÖN 295.170.12 RUTSJÖN 495.170.25	—	**17¾“** (45cm) 302.915.16	**22×13¾“** (56×35cm) 504.990.25	**15¾“** (40cm) White 703.589.44
48” (122cm)	**49×21¾”** (125×55cm) double 895.169.10	**48⅛×21”** (122×53cm) 495.170.11	—	**20”** (51cm) ORRSJÖN 495.169.12 BACKSJÖN 295.170.12 RUTSJÖN 495.170.25	—	**17¾“** (45cm) 302.915.16	**22×13¾“** (56×35cm) 504.990.25	**15¾“** (40cm) White 703.589.44

How to choose a vessel sink and faucet

Semi-recessed and vessel sink	**Regular faucet**	**Tall faucet**
ORRSJÖN/BACKSJÖN/ RUTSJÖN semi-recessed sink + countertop	204.003.23, 205.321.11, 005.320.94, 905.325.27, 505.325.34, 305.325.49, 705.326.94, 805.327.16, 105.327.29, 205.328.61, 005.328.76, 305.331.53, 705.332.74	—
TÖRNVIKEN vessel sink + countertop 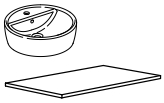	204.003.23, 205.321.11, 005.320.94, 905.325.27, 505.325.34, 305.325.49, 705.326.94, 805.327.16, 105.327.29, 205.328.61, 005.328.76, 305.331.53, 705.332.74	—
KATTEVIK vessel sink + countertop 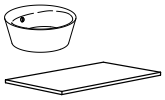	—	003.430.98, 005.320.94

HAVBÄCK combinations

Width×Depth×Height. Knobs/handles are not included.

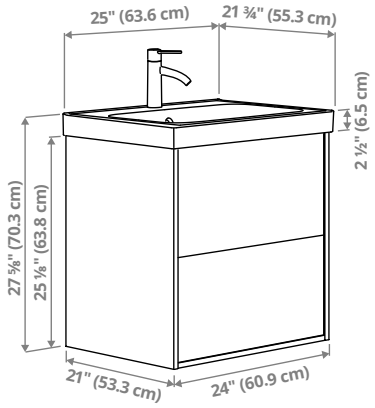

HAVBÄCK/ORRSJÖN vanity with drawers/sink/faucet,
25×21¾×27⅝" (63.6×55.3×70.3cm).

This combo has 2 spacious drawers and room on the sink for toothbrush and soap.

Beige	495.306.87
Dark gray	695.306.86
White	295.306.88

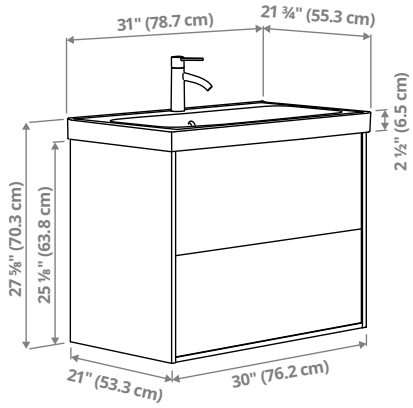

HAVBÄCK/ORRSJÖN vanity with drawers/sink/faucet,
31×21¾×27⅝" (78.7×55.3×70.3cm).

This combo has 2 spacious drawers and room on the sink for toothbrush and soap.

Beige	495.307.10
Dark gray	695.307.09
White	895.307.08

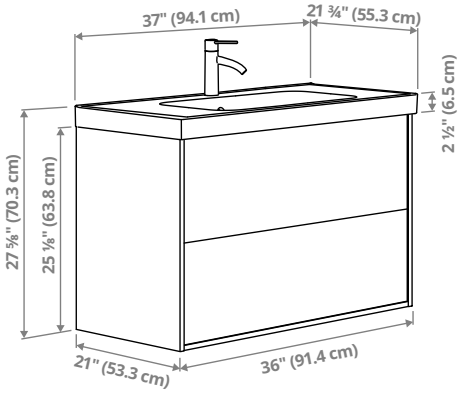

HAVBÄCK/ORRSJÖN vanity with drawers/sink/faucet,
37⅛×21¾×27⅝" (94.1×55.3×70.3cm).

This combo has 2 spacious drawers and room on the sink for toothbrush and soap.

Beige	095.307.45	095.307.45
Dark gray	395.307.44	395.307.44
White	595.307.43	595.307.43

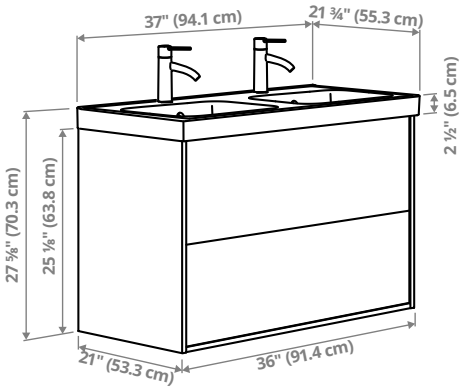

HAVBÄCK/ORRSJÖN vanity with drawers/sink/faucets,
37⅛×21¾×27⅝" (94.1×55.3×70.1cm).

This combo has 2 spacious drawers and a double sink that can handle the morning rush.

Beige	695.307.33
Dark gray	895.307.32
White	095.307.31

HAVBÄCK combinations

Width×Depth×Height. Knobs/handles are not included.

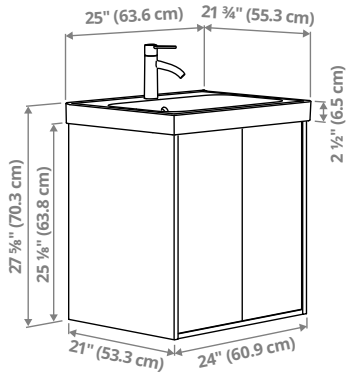

HAVBÄCK/ORRSJÖN vanity with doors/sink/faucet,
25×21¾×27⅝" (63.6×55.3×70.3cm).

This combo offers closed storage and room on the sink for toothbrush and soap.

Beige	395.306.97
Dark gray	595.306.96
White	795.306.95

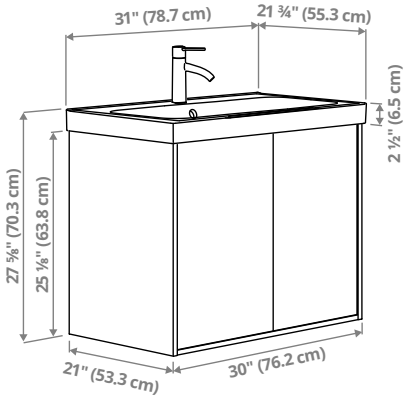

HAVBÄCK/ORRSJÖN vanity with doors/sink/faucet,
31×21¾×27⅝" (78.7×55.3×70.3cm).

This combo offers closed storage and room on the sink for toothbrush and soap.

Beige	595.307.24
Dark gray	795.307.23
White	995.307.22

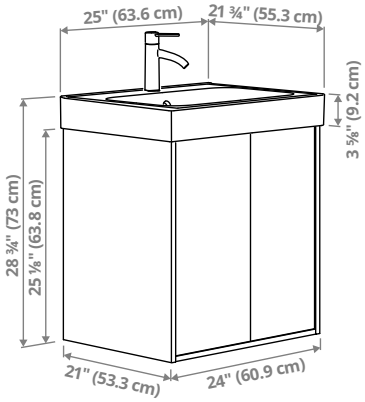

HAVBÄCK/ORRSJÖN vanity with doors/deep sink/faucet,
25×21¾×28¾" (63.6×55.3×73cm).

This combo offers closed storage and a deep sink that prevents spilling on the floor.

Beige	195.307.02
Dark gray	395.307.01
White	595.307.00

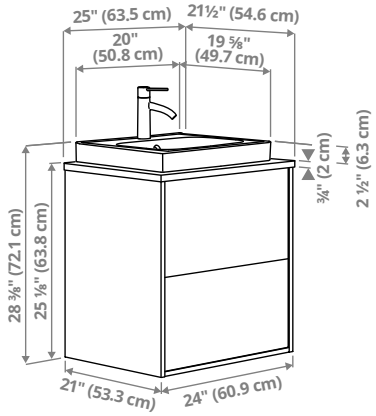

HAVBÄCK/ORRSJÖN vanity with drawers/sink/faucet,
25×21½×28⅜" (63.5×54.6×72.1cm).

This vanity with semi-recessed sink and countertop becomes a personal centrepiece with your choice of knobs or handles.

Beige/Black marble effect	995.319.72
Beige/Bamboo	995.319.91
Beige/Brown walnut effect	495.319.84
Beige/White marble effect	995.319.48
Dark gray/Black marble effect	795.319.73
Dark gray/Bamboo	795.319.92
Dark gray/Brown walnut effect	195.319.85
Dark gray/Gray stone effect	695.319.78
Dark gray/White marble effect	195.319.47
White/Black marble	595.319.74
White/Bamboo	595.319.93
White/Brown walnut effect	995.319.86
White/Gray stone effect	495.319.79
White/White marble effect	395.319.46

HAVBÄCK combinations

Width×Depth×Height. Knobs/handles are not included.

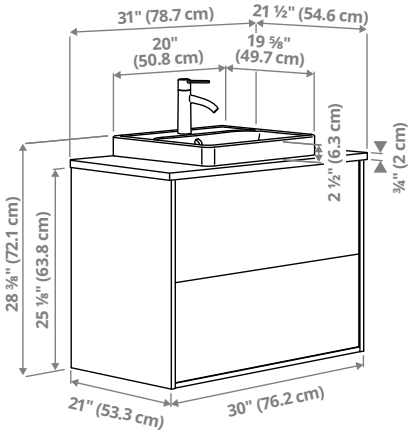

HAVBÄCK/ORRSJÖN vanity with drawers/sink/faucet,

31×21½×28⅜" (78.7×54.6×72.1cm).

This vanity with semi-recessed sink and countertop becomes a personal centrepiece with your choice of knobs or handles.

Beige/Black marble effect	395.325.16
Beige/Bamboo	995.325.18
Beige/Brown walnut effect	195.325.17
Beige/White marble effect	095.321.60
Dark gray/Black marble effect	595.325.20
Dark gray/Bamboo	195.325.22
Dark gray/Brown walnut effect	395.325.21
Dark gray/Gray stone effect	195.326.02
Dark gray/White marble effect	495.321.58
White/Black marble	995.325.23
White/Bamboo	495.325.25
White/Brown walnut effect	795.325.24
White/Gray stone effect	995.326.03
White/White marble effect	695.321.57

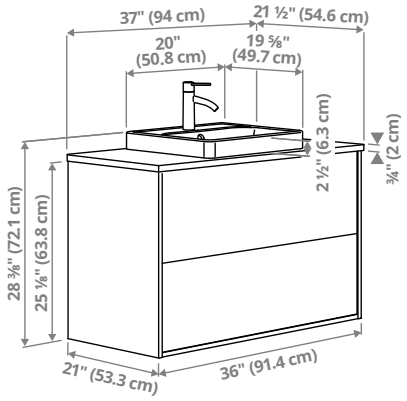

HAVBÄCK/ORRSJÖN vanity with drawers/sink/faucet,

37×21½×28⅜" (94×54.6×72.1cm).

This vanity with semi-recessed sink and countertop becomes a personal centrepiece with your choice of knobs or handles.

Beige/Black marble effect	195.355.54
Beige/Bamboo	795.355.65
Beige/Brown walnut effect	495.355.62
Beige/White marble effect	595.355.33
Dark gray/Black marble effect	895.355.55
Dark gray/Bamboo	595.355.66
Dark gray/Brown walnut effect	295.355.63
Dark gray/Gray stone effect	495.355.57
Dark gray/White marble effect	795.355.32
White/Black marble	695.355.56
White/Bamboo	395.355.67
White/Brown walnut effect	095.355.64
White/Gray stone effect	295.355.58
White/White marble effect	995.355.31

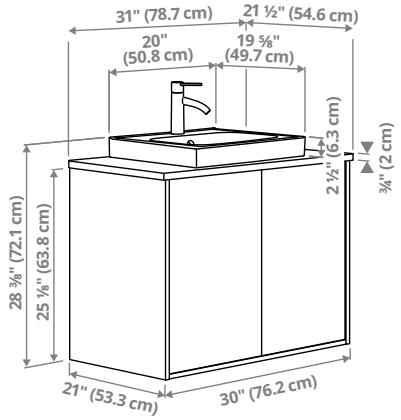

HAVBÄCK/ORRSJÖN vanity with doors/sink/faucet,

31×21½×28⅜" (78.7×54.6×72.1cm).

This vanity with doors, semi-recessed sink and countertop becomes a personal centrepiece with your choice of knobs or handles.

Beige/Black marble effect	095.340.17
Beige/Bamboo	495.340.20
Beige/White marble effect	295.340.16
Dark gray/Black marble effect	895.340.18
Dark gray/Bamboo	295.340.21
Dark gray/White marble effect	495.340.15
White/Black marble	695.340.19
White/Bamboo	095.340.22
White/White marble effect	795.340.14

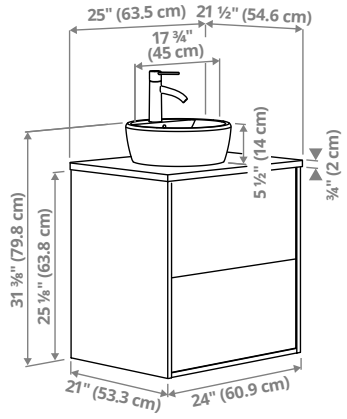

HAVBÄCK/TÖRNVIKEN vanity with drawers/sink/faucet,

25×21½×31⅜" (63.5×54.6×79.8cm).

This vanity with countertop and a round vessel sink, gets a personal expression when you add your choice of knobs or handles.

Beige/Black marble effect	695.321.19
Beige/White marble effect	295.321.16
Dark gray/Black marble effect	895.321.18
Dark gray/White marble effect	495.321.15
White/Black marble effect	095.321.17
White/White marble effect	795.321.14

HAVBÄCK combinations

Width×Depth×Height. Knobs/handles are not included.

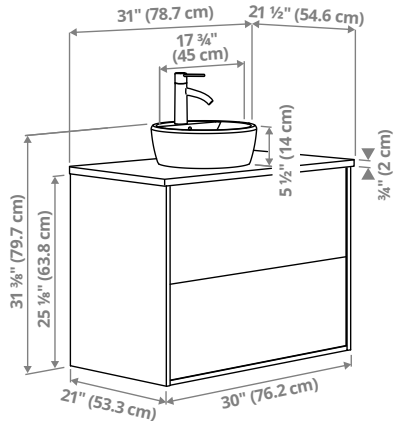

HAVBÄCK/TÖRNVIKEN vanity with drawers/sink/faucet,
31×21½×31⅜" (78.7×54.6×79.7cm).

This vanity with countertop and a round vessel sink, gets a personal expression when you add your choice of knobs or handles.

Beige/Black marble effect	695.341.75
Beige/White marble effect	395.341.48
Dark gray/Black marble effect	495.341.76
Dark gray/White marble effect	595.341.47
White/Black marble effect	295.341.77
White/White marble effect	795.341.46

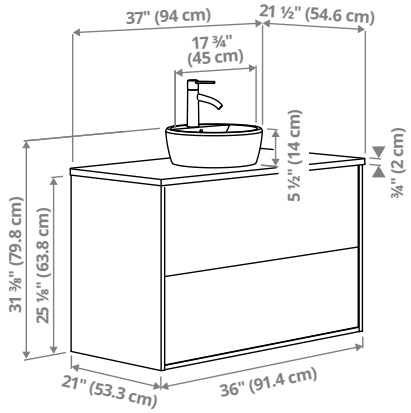

HAVBÄCK/TÖRNVIKEN vanity with drawers/sink/faucet,
37×21½×31⅜" (94×54.6×79.8cm).

This vanity with countertop and a round vessel sink, gets a personal expression when you add your choice of knobs or handles.

Beige/Black marble effect	395.356.09
Beige/White marble effect	595.356.08
Dark gray/Black marble effect	195.356.10
Dark gray/White marble effect	795.356.07
White/Black marble effect	995.356.11
White/White marble effect	995.356.06

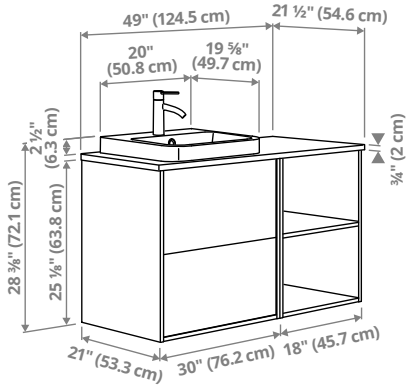

HAVBÄCK/ORRSJÖN vanity with drawers/sink/faucet,
49×21½×28⅜" (124.5×54.6×72.1cm).

This solution has a little of everything. Both open and closed storage for decorative items and essentials, counterspace to keep things handy and the warm feel of wood to add character to your space.

Beige/Brown oak effect/White marble effect	695.357.59
Beige/Oak effect/White marble effect	095.357.57
Dark gray/Brown oak effect/White marble effect	895.357.58
Dark gray/Oak effect/White marble effect	295.357.56

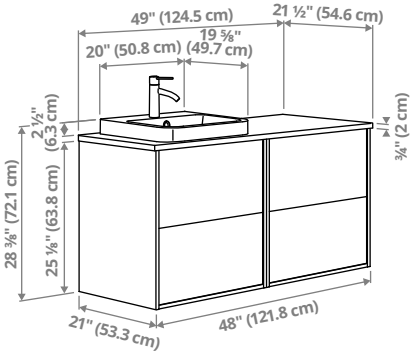

HAVBÄCK/ORRSJÖN vanity with drawers/sink/faucet,
49×21½×28⅜" (125×55×72cm).

In a shared bathroom, this solution offers your own private drawer – or two. The sink is paired with a roomy countertop where you can place things while getting ready for the day ahead.

Beige/Black marble effect	495.359.58
Beige/Bamboo	995.359.65
Beige/Brown walnut effect	695.359.62
Beige/White marble effect	695.359.57
Dark gray/Black marble effect	295.359.59
Dark gray/Bamboo	595.359.67
Dark gray/Brown walnut effect	495.359.63
Dark gray/Gray stone effect	195.359.69
Dark gray/White marble effect	095.359.55
White/Black marble	895.359.61
White/Bamboo	395.359.68
White/Brown walnut effect	295.359.64
White/Gray stone effect	995.359.70
White/White marble effect	795.359.52

HAVBÄCK combinations

Width×Depth×Height. Knobs/handles are not included.

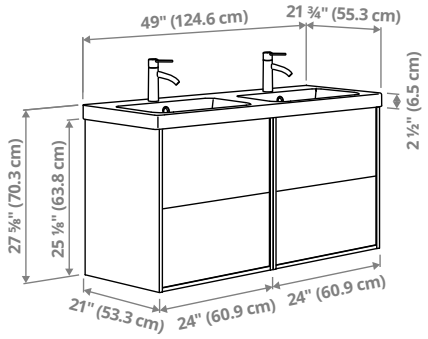

HAVBÄCK/ORRSJÖN vanity with drawers/sink/faucets,
49×21¾×27⅝" (124.6×55.3×70.3cm).

What do you get when you combine 2 of everything? Generous storage space and double the washing space! A brilliant solution with plenty of space for 2 or more to get ready in the morning.

Beige	695.357.40
Dark gray	895.357.39
White	095.357.38

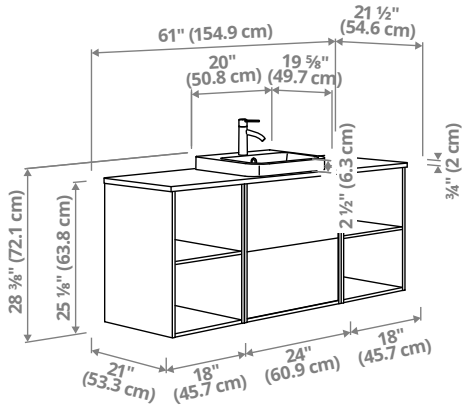

HAVBÄCK/ORRSJÖN vanity with drawers/sink/faucet,
61×21½×28⅜" (154.9×54.6×72.1cm).

A solution with closed storage and sink placed in the middle, surrounded by open cabinets and countertop space on each side. The warm wooden look invites you to relax.

Beige/Brown oak effect/White marble effect	995.357.91
Beige/Oak effect/White marble effect	795.357.92
Dark gray/Brown oak effect/White marble effect	595.357.93
Dark gray/Oak effect/White marble effect	395.357.94

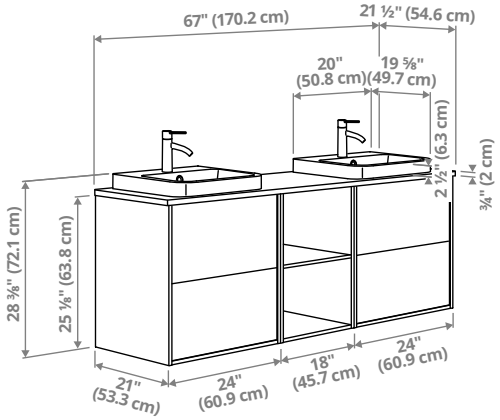

HAVBÄCK/ORRSJÖN vanity with drawers/sinks/faucets,
67×21½×28⅜" (170.2×54.6×72.1cm).

A mix of open and closed storage and shared countertop space between the 2 sinks – an ideal set-up that prevents queues during the morning rush. Functional and harmonious with a warm wooden look.

Beige/Brown oak effect/White marble effect	595.359.29
Beige/Oak effect/White marble effect	195.359.31
Dark gray/Brown oak effect/White marble effect	995.359.32
Dark gray/Oak effect/White marble effect	795.359.33

HAVBÄCK all parts

Width×Depth×Height. Knobs/handles are not included. Hinges and drawers come with integrated dampers.

HAVBÄCK vanity with doors, 24×21×25⅛" (61×53×64cm). Closed storage with capacity for bulkier or taller items, like bottles and baskets, keeping them dust-free and out of sight. 2 legs can be added.

Beige	105.740.07
Dark gray	405.352.41
White	305.352.32

HAVBÄCK vanity with doors, 30×21×25⅛" (76×53×64cm). Closed storage with capacity for bulkier or taller items, like bottles and baskets, keeping them dust-free and out of sight. 2 legs can be added.

Beige	905.740.08
Dark gray	905.352.53
White	805.352.44

HAVBÄCK vanity with drawers, 24×21×25⅛" (61×53×64cm). Generous, full drawer storage capacity for all your essentials as piping is led through the back and not via a cut-out in the drawers. 2 legs can be added.

Beige	705.740.09
Dark gray	605.352.02
White	705.351.93

HAVBÄCK vanity with drawers, 30×21×25⅛" (76×53×64cm). Generous, full drawer storage capacity for all your essentials as piping is led through the back and not via a cut-out in the drawers. Drawers open all the way for a good overview. 2 legs can be added.

Beige	505.740.10
Dark gray	105.352.14
White	905.352.05

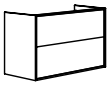

HAVBÄCK vanity with drawers, 36×21×25⅛" (91×53×64cm). Generous, full drawer storage capacity for all your essentials as piping is led through the back and not via a cut-out in the drawers. Drawers open all the way for a good overview. 2 legs can be added.

Beige	305.740.11
Dark gray	105.352.28
White	805.352.20

HAVBÄCK high cabinet, 18×15×77" (46×38×196cm). Generous storage on a narrow space that keeps towels, blow dryer and other bathroom essentials dust-free and out of sight. 2 legs can be added.

Beige	805.740.04
Dark gray	305.351.90
White	205.351.81

HAVBÄCK wall cabinet, 18×6×37" (46×15×94cm). This shallow wall cabinet with adjustable shelves provides a good overview of all your things.

Beige	105.740.12
Dark gray	805.351.78
White	705.351.69

Other furniture

Width×Depth×Height.

HAGAÅN open cabinet, 18×21×13″ (46×53×33cm). There is a concealed space for piping in the back of the cabinet.

Brown oak effect	805.355.31
Oak effect	905.355.21

HAGAÅN open cabinet, 18×21×25⅛″ (46×53×64cm). There is a concealed space for piping in the back of the cabinet. 2 legs can be added.

Brown oak effect	905.355.35
Oak effect	605.355.13

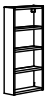

HAGAÅN wall open cabinet, 18×6×37″ (46×15×94cm). This shallow wall cabinet with shelves provides a good overview of all your things and puts often-used items within easy reach.

Brown oak effect	105.355.39
Oak effect	005.355.25

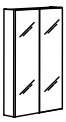

LETTAN mirror cabinet, 2 doors. Mirrored door and sides on the inside and outside enable viewing from different angles.

24×6×37″ (61×15×94cm)	805.354.99
30×6×37″ (76×15×94cm)	905.355.02
36×6×37″ (91×15×94cm)	205.355.05

LETTAN mirror. Fittings are adjustable in depth, give space for lighting cords. Can be hung horizontally or vertically.

24×37″ (61×94cm)	805.523.23
30×37″ (76×94cm)	605.523.24
36×37″ (91×94cm)	305.523.30
48×37″ (122×94cm)	905.523.32

FAXÄLVEN mirror cabinet with built-in lighting, 24×6×37″ (61×15×94cm). Integrated lighting around the outside and the inside. Works with the SILVERGLANS driver for wireless control. Dimmable with RODRET wireless dimmer/power switch, sold separately.

Brown oak effect	995.168.20
Oak effect	395.168.23
White	695.168.26

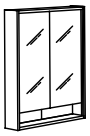

FAXÄLVEN mirror cabinet with built-in lighting, 30×6×37″ (76×15×94cm). Integrated lighting around the outside and the inside. Works with the SILVERGLANS driver for wireless control. Dimmable with RODRET wireless dimmer/power switch, sold separately.

Brown oak effect	795.168.21
Oak effect	195.168.24
White	495.168.27

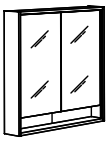

FAXÄLVEN mirror cabinet with built-in lighting, 36×6×37″ (91×15×94cm). Integrated lighting around the outside and the inside. Works with the SILVERGLANS driver for wireless control. Dimmable with RODRET wireless dimmer/power switch, sold separately.

Brown oak effect	595.168.22
Oak effect	895.168.25
White	295.168.28

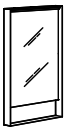

FAXÄLVEN mirror with built-in lighting. Light inside the metal frame around the mirror. Works with the SILVERGLANS driver for wireless control. Dimmable with RODRET wireless dimmer/power switch, sold separately.

24×37″ (61×94cm)	595.167.75
30×37″ (76×94cm)	395.167.76

FAXÄLVEN mirror with built-in lighting. Lighting all around the mirror and one light source on the mirror. Works with the SILVERGLANS driver for wireless control. Dimmable with RODRET wireless dimmer/power switch, sold separately.

31½″ (80cm)	195.167.77
39⅜″ (100cm)	995.167.78

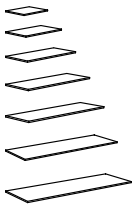

TOLKEN countertop, foil. Thickness ¾″. Countertops in foil create a clean and modern look that also harmonizes in more traditional bathrooms.

White marble effect	
25×21½″ (64×55cm)	205.553.86
31×21½″ (79×55cm)	405.553.85
37×21½″ (94×55cm)	705.553.84
49×21½″ (125×55cm)	805.553.88
61×21½″ (155×55cm)	905.553.83
67×21½″ (170×55cm)	005.553.87
Black marble effect	
25×21½″ (64×55cm)	105.553.82
31×21½″ (79×55cm)	305.553.81
37×21½″ (94×55cm)	505.553.80
49×21½″ (125×55cm)	905.553.78
61×21½″ (155×55cm)	705.553.79
67×21½″ (170×55cm)	105.553.77
Gray stone effect	
25×21½″ (64×55cm)	205.551.07
31×21½″ (79×55cm)	405.551.06
37×21½″ (94×55cm)	605.551.05
49×21½″ (125×55cm)	805.551.09

TOLKEN countertop, laminate. Thickness 3/4″. Laminate countertops create bold look that feels warm and inviting.

Brown walnut effect	
25×21½″ (64×55cm)	805.683.24
31×21½″ (79×55cm)	505.683.25
37×21½″ (94×55cm)	305.683.26
49×21½″ (125×55cm)	105.683.27
61×21½″ (155×55cm)	905.683.28
67×21½″ (170×55cm)	705.683.34

ÅLSKEN countertop, thick veneer. Thickness ¾″. Countertops in thick veneer are made with a thick layer of wood veneer, each with unique grain patterns.

Bamboo	
25×21½″ (64×55cm)	805.551.47
31×21½″ (79×55cm)	705.551.43
37×21½″ (94×55cm)	505.551.44
49×21½″ (125×55cm)	205.551.45

ALMAÅN legs, 2-pack. Adjustable height 4¾-7⅞″ (12-20cm).

Stainless steel	205.349.16

ALMAÅN legs, 2-pack. Height 4½″ (11cm). Painted solid beech.

Light gray	705.355.41
White	905.355.40

ALMAÅN legs, 2-pack. Height 7″ (18cm). Painted solid beech.

Light gray	305.351.33
White	505.351.32

Accessories

VISSLAÅN box with compartments, 12¾×12¼×3¾" (32×31×9cm). Small compartments practical for sorting items like hair accessories and jewelry.

Brown-beige	005.621.04

VISSLAÅN box with lid, set of 5.

Brown-beige	905.545.38

VISSLAÅN drawer organizer, 13¾×4¼×1" (35×11×3cm).

Brown-beige	405.621.16

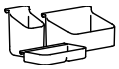

VISSLAÅN drawer organizer, set of 3.

Brown-beige	205.621.17

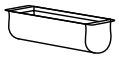

BOLLÖSUND drawer organizer.

Beige	105.621.08

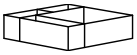

BOLLÖSUND drawer organizer, set of 4

Beige	505.621.06

BOLLÖSUND toiletry bag.

Beige	605.621.15

Sinks

Width×Depth. RÄNNILEN water trap included.

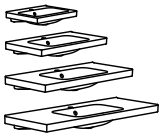

ORRSJÖN sink, white ceramic. Height 2½" (6.5cm).

25×21¾" (64×55cm)	295.169.08
31×21¾" (79×55cm)	895.169.05
37×21¾" (94×55m)	695.169.06
49×21¾" (125×55cm)	495.169.07

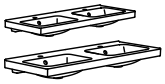

ORRSJÖN double sink, white ceramic. Height 2½" (6.5cm).

37×21¾" (94×55m)	095.169.09
49×21¾" (125×55cm)	895.169.10

ORRSJÖN semi-recessed sink, white ceramic. To be completed with a countertop. Height 2½" (6.5cm).

20×19⅝" (51×50cm)	495.169.12

ORRSJÖN deep sink, white ceramic. Height 3⅝" (9.2cm). Can only be used together with vanity with doors.

25×21¾" (64×55cm)	295.169.13

BACKSJÖN sink, white crushed marble. Height 2⅜" (6cm).

24⅛×21" (61×53cm)	295.170.07
30⅛×21" (76×53cm)	095.170.08

BACKSJÖN sink, white crushed marble. 2 faucet holes. Height 2⅜" (6cm).

36⅛×21" (91×53cm)	695.170.10

BACKSJÖN double sink, white crushed marble. Height 2⅜" (6cm).

48⅛×21" (122×53cm)	495.170.11

BACKSJÖN semi-recessed sink, white crushed marble. To be completed with a countertop. Height 2⅜" (6cm).

20×19⅝" (51×50cm)	295.170.12

RUTSJÖN sink, white ceramic. Height 4⅝" (11.8cm).

25¼×21⅞" (64×56cm)	195.170.22
31⅜×21⅞" (80×56cm)	995.170.23
37⅜×21⅞" (95×56cm)	795.170.24

RUTSJÖN semi-recessed sink, white ceramic. To be completed with a countertop. Height 4¼" (10.7cm).

20×19⅝" (51×50cm)	495.170.25

T**ÖRNVIKEN vessel sink,** white ceramic. To be completed with a countertop. Height 5½" (14cm).

Ø17¾" (45cm)	302.915.16

OXMYREN vessel sink, dark Gray glass. To be completed with a countertop and a tall faucet. Height 4¾" (12cm).

22×13¾" (56×35cm)	504.990.25

KATTEVIK vessel sink, white crushed marble. To be completed with a countertop and a tall faucet. Ø15¾" (40cm), height 5⅞" (15cm).

White	703.589.44

Faucets

SALJEN sink faucet, plastic. Height 4¾" (12cm).

Black	204.003.23

PILKÅN sink faucet, brass. Height 3⅞" (10cm).

Chrome-plated	205.328.61

ENSEN sink faucet, brass. Height 4¾" (12cm).

Chrome-plated	305.325.49

DALSKÄR sink faucet, brass. Height 7⅛" (18cm).

Stainless steel	505.325.34
Chrome-plated	905.325.27

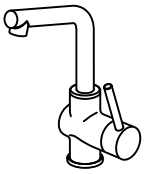

LUNDSKÄR sink faucet, brass. Height 9⅞" (25cm).

Black	105.327.29

BROGRUND sink faucet, brass. Height 6¾" (17cm).

Chrome-plated	205.321.11

BROGRUND sink faucet with sensor, brass. Height 5⅛" (13cm).

Chrome-plated	804.233.50

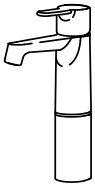

BROGRUND sink faucet, tall. Brass. Height 11" (28cm).

Chrome-plated	005.320.94

RUNSKÄR sink faucet, brass. Height 3⅞" (10cm).

Brass	005.328.76
Chrome-plated	305.331.53

HAMNSKÄR sink faucet, brass. Height 7½" (19cm).

Black	705.326.94
Chrome-plated	805.327.16

VOXNAN sink faucet, brass. Height 7⅛" (18cm).

Chrome-plated	705.332.74

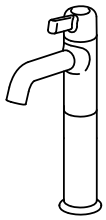

VOXNAN sink faucet, tall. Brass. Height 12" (30cm).

Chrome-plated	605.332.55

Lighting for HAVBÄCK

Ceiling, wall and cabinet lighting

FRIHULT ceiling lamp. The glass shade provides balanced general lighting throughout the room. Light bulb sold separately. IKEA recommends LED bulb E12 chandelier opal white.

Stainless steel	304.316.49

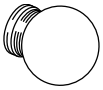

FRIHULT ceiling/wall lamp. The glass shade provides balanced general lighting throughout the room. Light bulb sold separately. IKEA recommends LED bulb E12 chandelier opal white.

Stainless steel	704.316.14

FRIHULT wall lamp. A versatile lamp that can be mounted facing upwards or downwards, on its own above the mirror or as a pair with one on each side. Light bulb sold separately. IKEA recommends LED bulb E12 chandelier opal white.

Stainless steel	704.316.28

VÅTHULT LED cabinet/mirror light, aluminium-colour. Can be placed above a mirror or on top of a mirror cabinet to get a good, glare-free light.

14” (35cm)	404.675.53

KABOMBA LED ceiling lamp, matt/black. Ceiling lamp in a modern art deco style. Perfect for bathrooms where you need a good general light.

14” (35cm)	604.898.13

KABOMBA LED wall lamp, dimmable, matt/black. Can be placed on its own above a mirror or as a pair with one lamp on each side. The lamp can be dimmed by using the button on the side.

19×6” (47×14cm)	104.898.20

KABOMBA LED walll lamp with mirror, dimmable, matt/black. Can be placed on one or both sides of a mirror. The lamp can be dimmed by using the button on the side. The small removable mirror can be placed anywhere on the lamp and enlarges the reflection – ideal for shaving or putting on make-up.

8” (20cm)	004.898.06

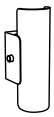

HAVSDUN LED wall lamp, dimmable, white/frosted glass. Can be placed on its own above a mirror or as a pair with one lamp on each side. The frosted glass shade spreads a soft light that you can dim.

	204.992.58

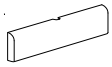

SILVERGLANS driver, 30W, wireless control, approved for bathroom. Use to complete the FAXÄLVEN mirror cabinet/mirror with built-in lighting. Use with the RODRET wireless dimmer/power switch.

White	504.748.26

RODRET Wireless dimmer/power switch, smart. Use with the SILVERGLANS driver and FAXÄLVEN mirror cabinet/mirror with built-in lighting. Allows dimming of the built-in lighting. Requires 2× AAA batteries, sold separately.

White	805.598.00

Drawer lighting

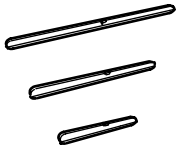

KÖLVATTEN LED lighting strip battery-operated. Built-in LED. The light switches on and off automatically when you open or close the drawer, so no energy is wasted. Recharge the batteries with a USB-C cable and USB charger, sold separately. Required AA batteries are sold separately; 2pcs for 12”, 3pcs for 20” and 4pcs for 28” lighting strip. IKEA recommends LADDA rechargeable batteries.

12” (30cm)	705.653.40
20” (50cm)	305.719.51
28” (70cm)	505.719.88

Services

We offer a range of services to help you with everything from putting it together to getting it home. Of course, the more you do yourself, the lower the price will be. And the more we do for you, the more you can sit back and relax!

Delivery service
Can't take your furniture with you?
We'll bring it to your home or workplace.

Click and Collect
Your online purchases can be ready for pick-up on a day that's convenient for you. Have access to all items available to purchase online at IKEA.ca. It's easy:

1. Buy your items online
2. Pre-select a date to collect your order
3. Pick-up your purchase at an IKEA store near you.

It's ok to change your mind
You have 365 days to return your purchase. Keep your receipt safe to make returns easier. You're free to change your mind. Return unused items in their original packaging within 365 days together with proof of purchase for a full refund.

Guidance

Enjoy fast and easy guidance on the way to your new IKEA kitchen. Below you find brochures and tools that will assist you in every step of the journey. All materials are available at your local IKEA store or online at IKEA.ca.

IKEA.ca

On our webpage you'll find lots of inspiration and ideas to get the most out of your HAVBÄCK bathroom, whether it's a new one or an old that you want to freshen up. Plus, here you'll find all products that you can imagine to personalize and create the bathroom of your dreams.

Bathroom brochure

A brochure full of inspirational pictures of bathrooms in all styles and sizes. Here you'll find everything from full-sized bathrooms to all those little extras that make everyday life in the bathroom easier and more fun.

IKEA Home Planner

Create your HAVBÄCK bathroom from the ground up in a 3D environment where you will get a price for every unit and for the complete bathroom. You can share your design, add it to a shopping list, print out drawings and product lists at home, or save them to the IKEA website. At your local IKEA store, you can discuss your design with one of our bathroom experts for further advice and support. Learn more at IKEA.ca. Enjoy fast and easy guidance on the way to your new IKEA Bathroom. Below you find brochures and tools that will assist you in every step of the journey. All materials are available at your local IKEA store or online at IKEA.ca.

Shop at IKEA

IKEA online
For more information about
Shop at IKEA visit IKEA.ca

Visit the IKEA store:
For opening hours and directions
to your nearest IKEA store, visit our
website at IKEA.ca

© Inter IKEA Systems B.V. 2023 (August 5, 2024) Canada FY25
Printed on recycled paper (Please recycle)