A guide to installing a new IKEA kitchen

SEKTION kitchen installation guide

This guide provides you with tips and step-by-step instructions on how to install your kitchen on your own.

IKEA

The step-by-step guide

Installing your new IKEA SEKTION kitchen correctly

This brochure is your guide to preparing and installing your new kitchen yourself. Inside you'll find clear steps to follow as well as useful tips and ideas. Use this guide along with your IKEA assembly instructions to make sure your kitchen is installed in the right way.

Before you begin

Go through this brochure before you begin to see what stages are involved in putting in your new kitchen and to organise what tools you'll need.

To make sure you have everything for your new kitchen, compare the packages and parts you have at home against the order list and the delivery list. You should only dismantle your old kitchen when you have all your new parts and appliances. Your kitchen parts and countertop should be stored indoors, with normal room temperature and humidity.

It's helpful if you arrange your cabinets in the order you will be installing them. Use your packing list and IKEA home planner drawing to help you. Before you remove your old kitchen you need to make sure that your electricity, gas and water is shut off. Use a qualified professional to disconnect and connect your gas, water and electricity.

You can do it yourself but you don´t have to

Our kitchens are designed to be as simple as possible for you to assemble and install yourself. But we're here to help as much as you'd like us to. We can offer you services ranging from planning and delivery to complete kitchen installations. For more details see the kitchen section of IKEA.ca/kitchenservices or contact your local IKEA store.

Once your kitchen arrives, check off your delivery to see that everything is in order.

What’s next?

You have now purchased your kitchen from IKEA and are about to start the installation process. Here are some helpful tips on what to expect as you move through the next process from delivery to install to countertops.

Delivery

Arrange the delivery 5-7 days prior to your installation start date. Clear a space in a room adjacent to the kitchen. You will want to have space to assemble and arrange the boxes in sequence of installation. Upon delivery of your kitchen, audit your delivered products to make sure it matches your order. If you discovered missing and/or damaged products call 1-866-866-IKEA (4532) or visit your nearest IKEA store for assistance.

Preparing

It’s now time to get started! You should be preparing your space a minimum of 1 week prior to your installation. During this time you will be cleaning out all your cabinets, creating a temporary kitchen space in your home, removing your kitchen, patch, paint walls, flooring and electrical/ plumbing preparations.

Installation

Our Installation Guide will show you step-by-step how to easily assemble and install your kitchen. Don’t worry, if installation is not for you, we have a team ready to complete the installation for you. Visit in store or at **IKEA.ca/KitchenServices** for further details on our installation services.

Custom Countertops

Once your base cabinets are installed with doors/drawers and panels, leveled and appliances in place, you are able to contact your countertop fabricator for templating of your custom countertop. Be sure to have your sink and/or cooktop onsite for templating. Once your countertop has been templated, the countertop fabricator will contact you and schedule a date for installation. Helpful tip, create a temporary countertop solution out of plywood so you can continue to use your kitchen between templating to installation.

Finishing Touches

You are almost done! Once your countertop is in, this is the time to complete the backsplash, touch up any painting, final plumbing and/or electrical. Finish off with a deep clean of your kitchen and you are ready to enjoy your brand new kitchen!

Getting to know the IKEA kitchen system

Below is a summary of all the components to help you in the installation of your new kitchen.

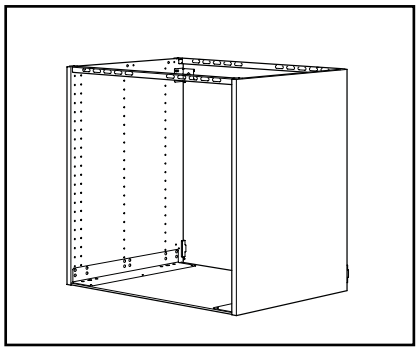

SEKTION: wall, base and high cabinet frames. Available in white or brown

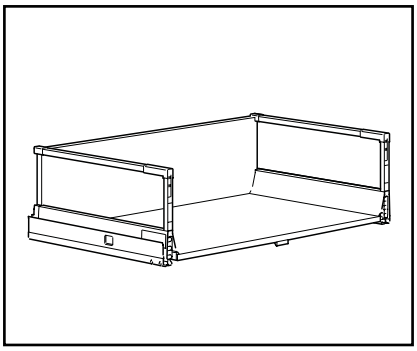

MAXIMERA: fully extending soft closing drawers, dividers and glass sides

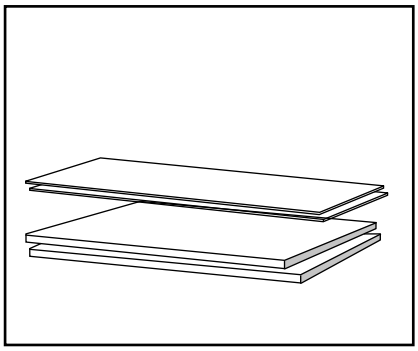

UTRUSTA: glass and solid shelves come with shelf pegs to pefectly fit inside SEKTION cabinet

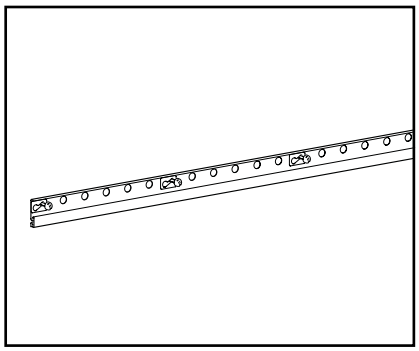

SEKTION: suspension rail makes attaching SEKTION base, wall and high cabinets easy

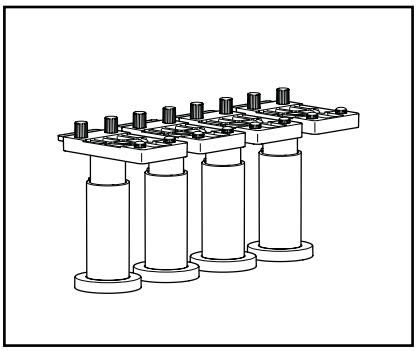

SEKTION: adjustable legs for SEKTION base and high cabinets. Use in combination with suspension rail.

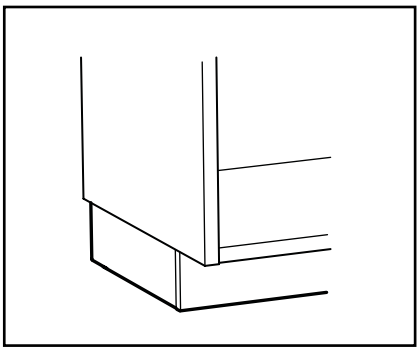

Toekicks: installed under SEKTION cabinets and clip onto SEKTION legs

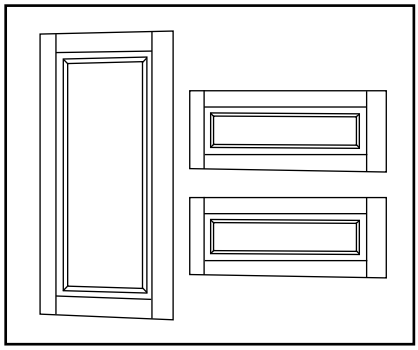

Door and Drawer Fronts: will attach to wall, base or high cabinets. Doors will be attached using UTRUSTA hinges and drawer fronts will be attached to MAXIMERA or FÖRVARA drawers.

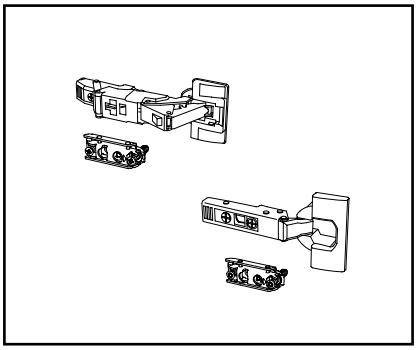

UTRUSTA: hinges. Use 110° hinges for standard doors, 153° hinges for doors with drawers inside. All our hinges comes with a built-in damper to ensure soft and quiet closing.

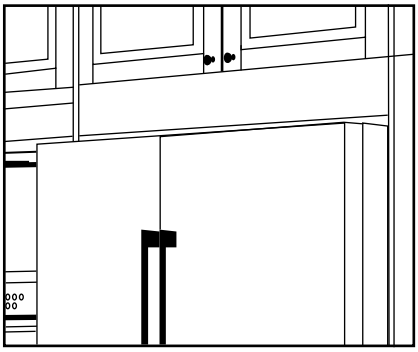

Fillers: to be cut from ½" or ⅝" thick cover panels to create the filler needed in your design. For filler above the fridge, use a 5" high drawer front.

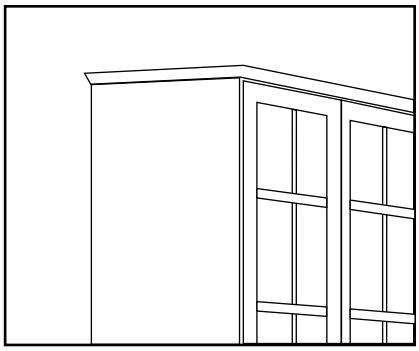

Mouldings: use these pieces for crown and light valance. Cutting and mitring maybe required based on your design.

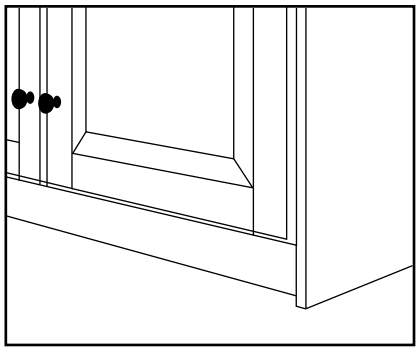

Cover Panels: ½" thick panels are used to cover exposed ends of your SEKTION wall, base and high cabinet frames to match the same finish as your door style. Some cutting maybe required to fit your design.

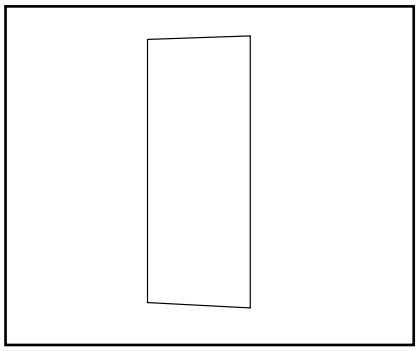

Gables: 5/8" thick gables are used as structural support often to cover and exposed side of a dishwasher to support a countertop or fridge to support a deep fridge cabinet. Cutting will be required to fit your design.

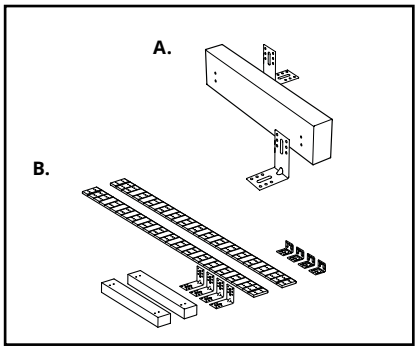

SEKTION: A. support bracket for island secures kitchen island to floor **B.** Island assembly kit makes it easy for you to mount cabinets back to back, or to attach a cover panel to the back of an island or peninsula.

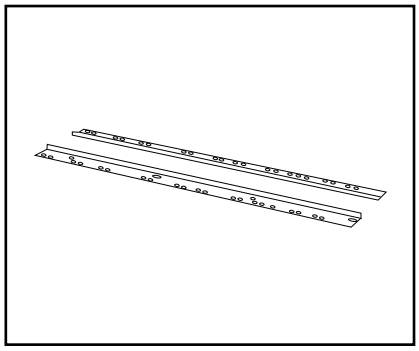

VÅGLIG: connecting rail to align the dishwasher front with the other doors and drawer fronts to create a smooth streamlined look.

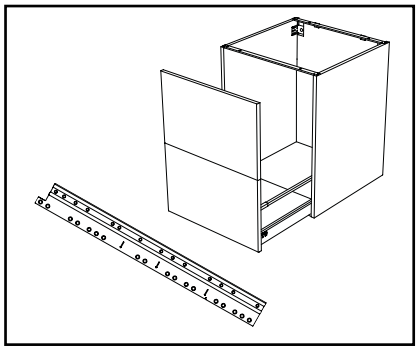

UTRUSTA: connecting rail for attaching drawer fronts together.

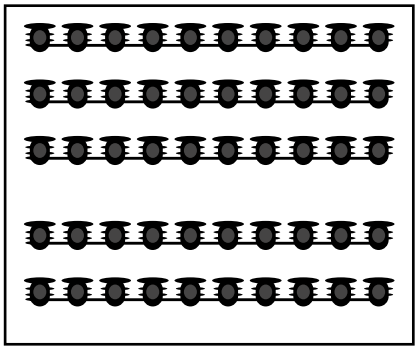

VARIERA cover cap: covers exposed cabinet holes for glass door cabinets. Available in white or brown.

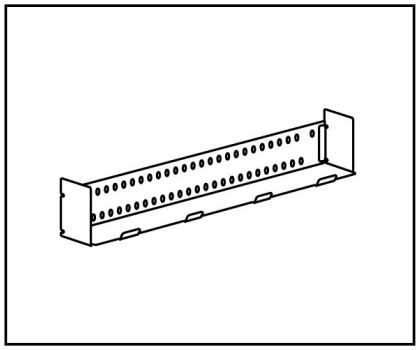

NYTTIG fillers: for microwave hood and range hoods to align to the depth of the wall cabinets.

The tools you'll need

Below is a summary of the basic tools you'll need. In addition you'll find what tools to use for each product in their respective assembly instructions. It's a good idea to wear safety glasses when using power tools.

Good to know

Plaster, wood or concrete walls? Because there are many different types of walls, fixing hardware is not supplied with your cabinets. Most hardware or home improvement stores stock appropriate fixing hardware and can help you choose the right type for your walls.

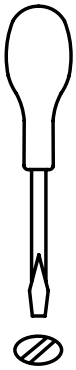

Flat screwdriver

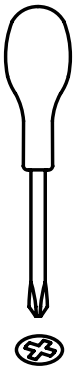

Phillips screwdriver

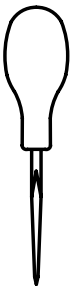

Awl

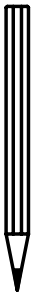

Pencil

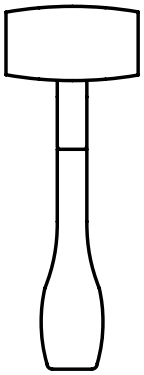

Rubber hammer

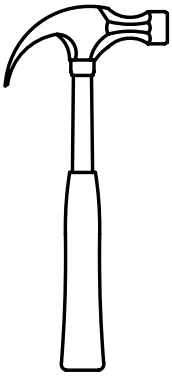

Hammer

Spirit level

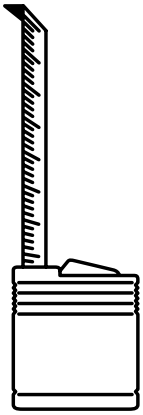

Measuring tape

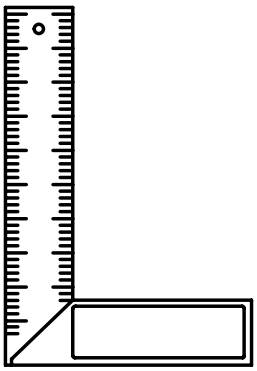

Try square

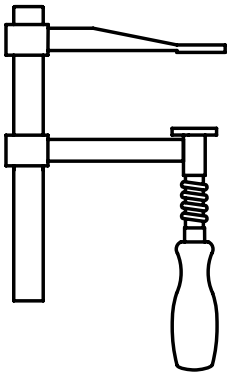

G clamps

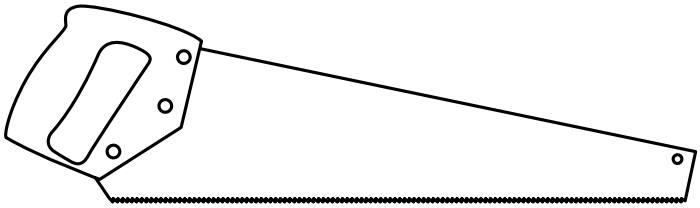

Fine-toothed handsaw

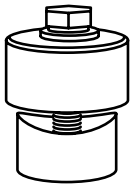

Hole cutter
For drilling the hole for the kitchen faucet in the sink (35 mm).

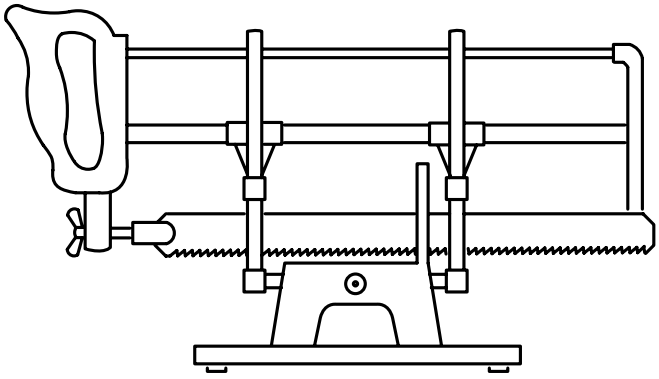

Mitre box and saw

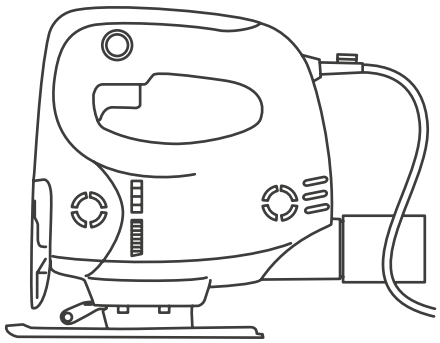

Jigsaw

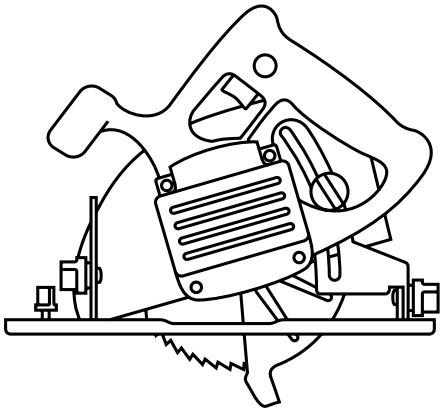

Circular saw

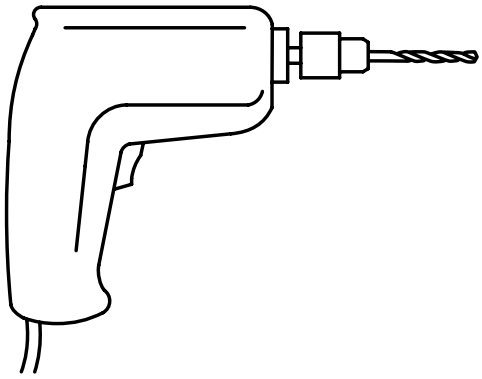

Electric screwdriver/drill

Prepare your room

Once you've removed your old kitchen, prepare the room by making sure your walls and floors are even, and your walls are suitable for supporting your new kitchen. Now is also the time to prime and paint your walls, put tiles on the walls and floors or change your flooring.

Marking cabinet positions

Draw a layout of your new kitchen directly on the wall. Check that everything fits with the measurements from your plan and your electricity, water, gas and ventilation connections are where you want them to be. Also mark where to fasten your new kitchen's suspension rails.

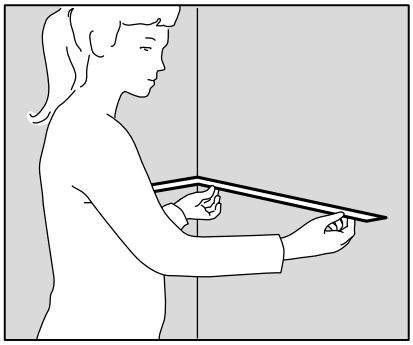

Prepare your space by making sure your corners are even and your walls and floor are straight. Use your try square for the corners and a spirit level for the walls and floor.

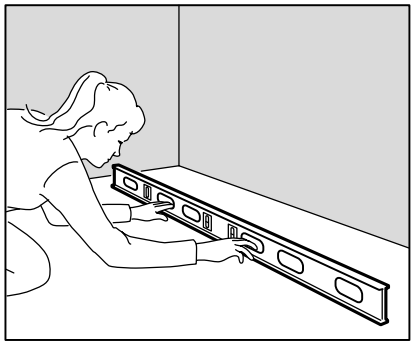

Make sure you note the highest point of the floor and where the corners aren't 90 degrees.

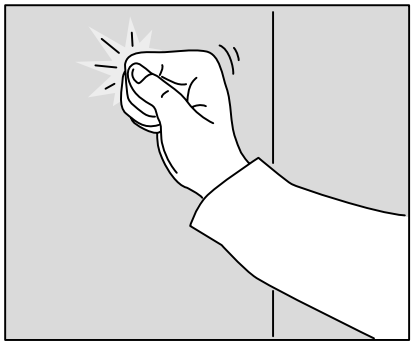

Check that your wall is strong enough to hang your suspension rail and cabinets. Depending on your wall material, it's best to install your rail onto a stud or a support beam. An electronic stud finder can be helpful.

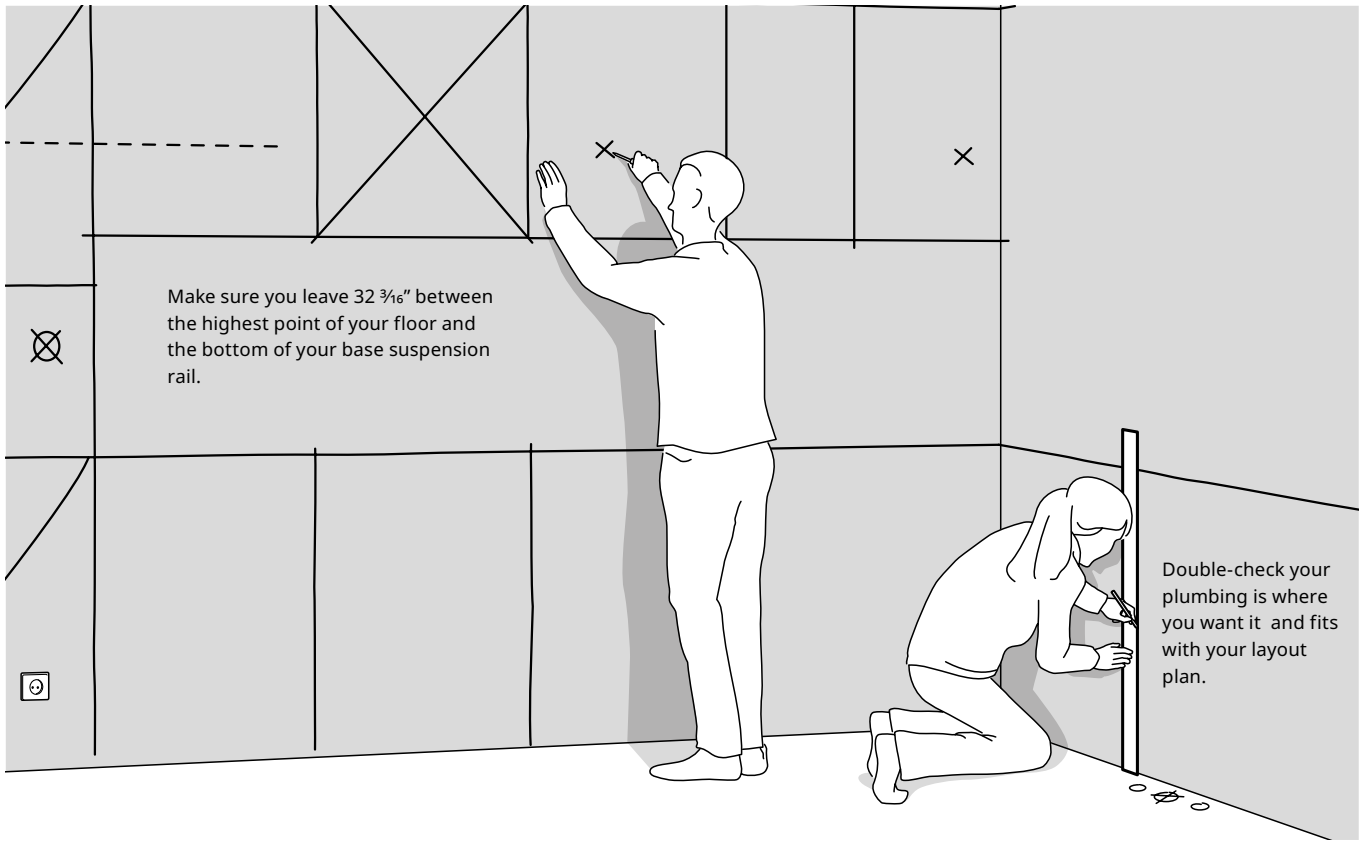

Mount the suspension rails

Your new IKEA cabinets can be hung directly onto a suspension rail making them easier to install and adjust. It’s important to make sure your suspension rail is straight and level, and to secure it with the right screw type for your wall.

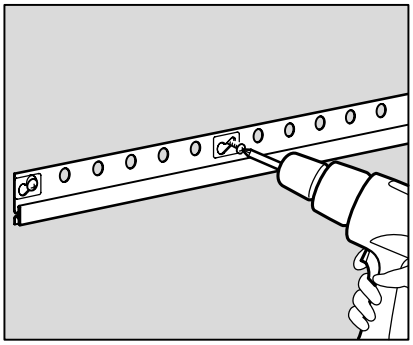

Fasten your rails, base cabinet rails first. Make sure you’ve found suitable points in the wall where the rails can be fastened and that the rails are level before drilling.

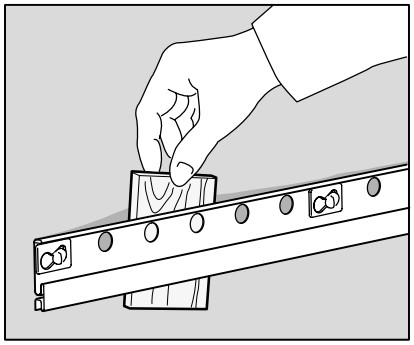

If your wall is uneven use spacers between the rail and the wall to make sure the rail is straight.

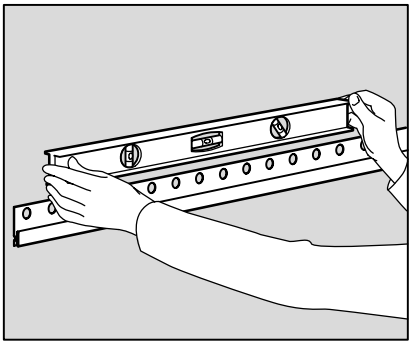

Use a spirit level to check that each rail is level.

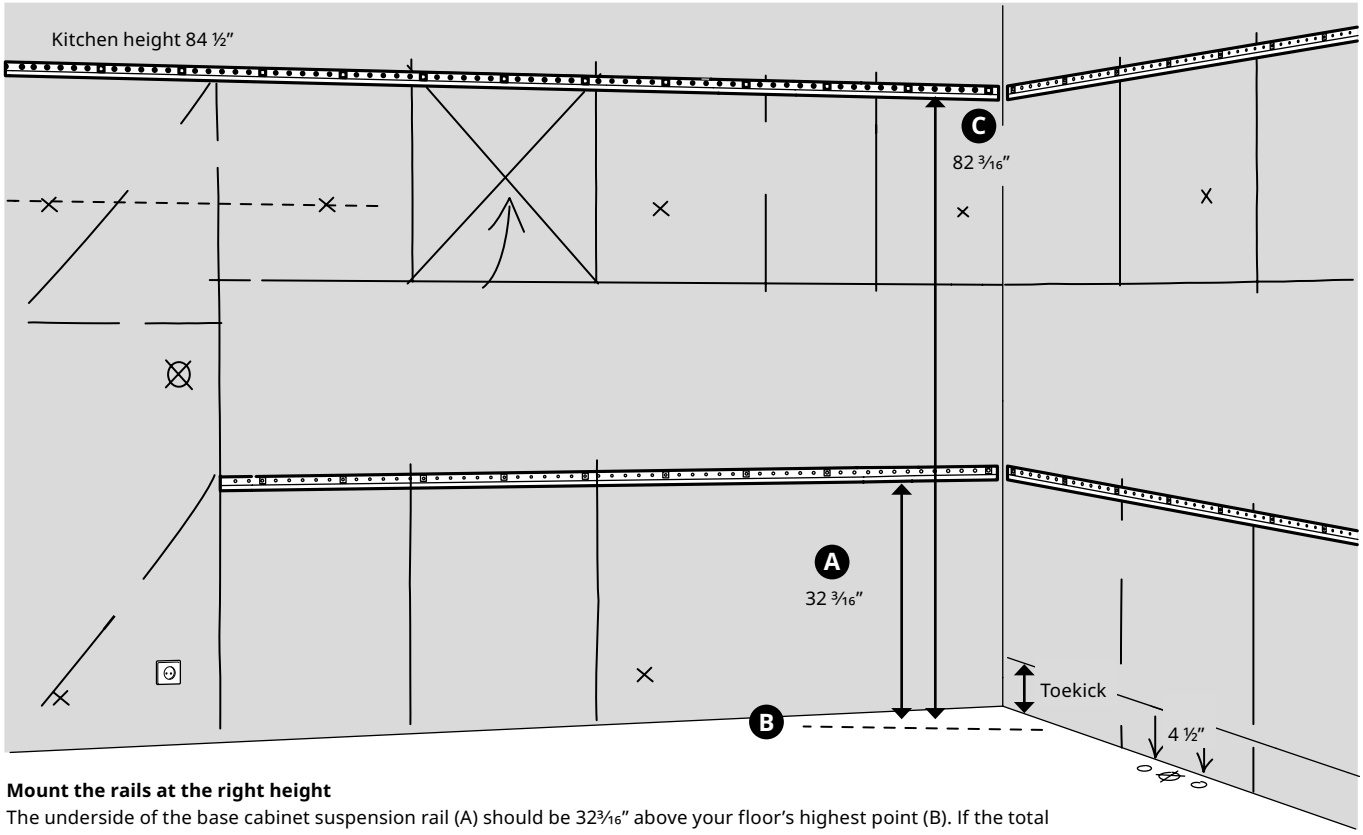

Mount the rails at the right height
The underside of the base cabinet suspension rail (A) should be 32³⁄₁₆” above your floor’s highest point (B). If the total height of your kitchen cabinets will reach 84½” then the underside of the wall or high cabinet suspension rail (C) should be at 82³⁄₁₆” above point (B). If the kitchen is 94½” high then install the rail with it’s underside at 92³⁄₁₆” above point (B).

Install your cabinets

In most kitchens it's best to install your wall cabinets first. This way you have room to move without base cabinets in the way. One exception is if you are installing a single line kitchen with a high cabinet at one end. In this case install the high cabinet first.

Before you begin, mark down all plumbing and other utilities. Some cabinets have ready-made openings for plumbing and utilities, but you can use a jigsaw to create your own openings if needed. Do this before fitting the cabinet in place. Be aware where you place openings, it can affect how you can arrange drawers in a cabinet.

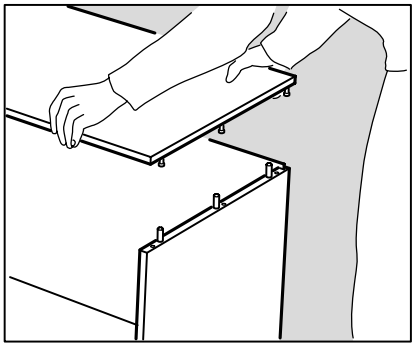

Assemble all wall cabinet frames according to the assembly instructions. Wait until later before fitting drawers, doors and internal fittings.

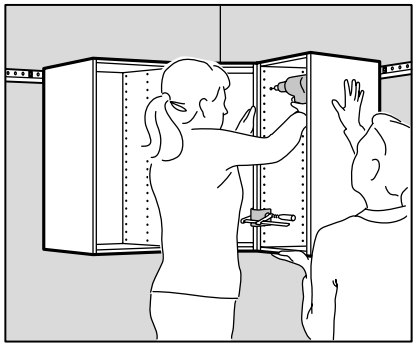

Hang the corner cabinet first and secure by tightening the screws. Hang the remaining cabinets and connect them with the included screws. Wait to tighten the screws until the base cabinets are in place and you can ensure alignment.

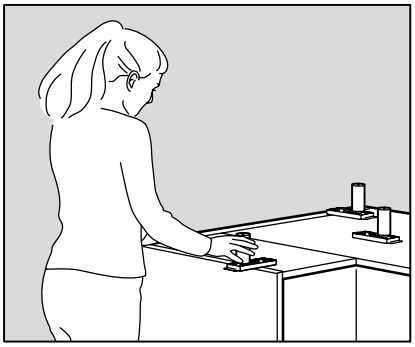

Assemble all base cabinets according to the assembly instructions. Make sure to have the legs attached in the order the cabinets will be fitted.

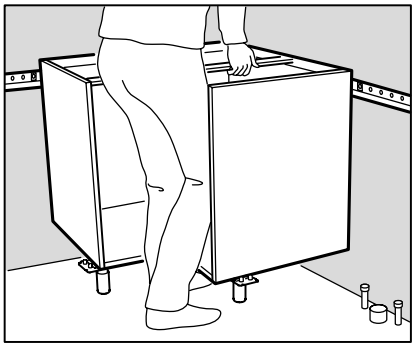

Hang your base cabinets starting in the corner. Hang each following cabinet in the same way. If you're installing a corner carousel now is the time to do it.

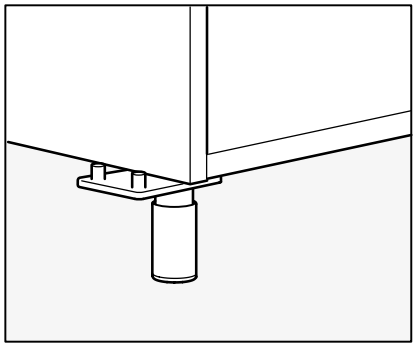

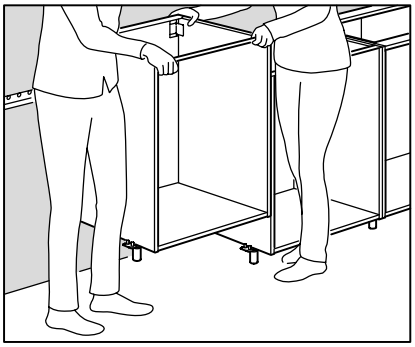

Cabinet legs connecting two cabinets can be used to support both cabinets while you're installing. Remember to use the distance ring included with the legs.

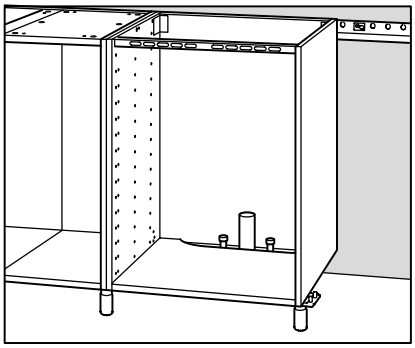

Make sure the right base cabinet is aligned with your plumbing.

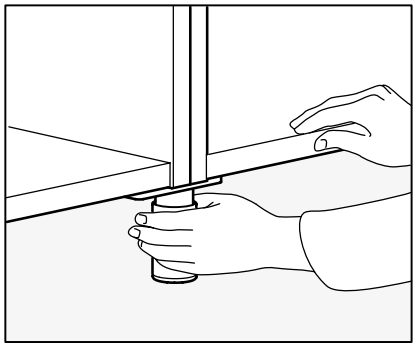

Check that each cabinet is aligned with the previous cabinet by adjusting the legs.

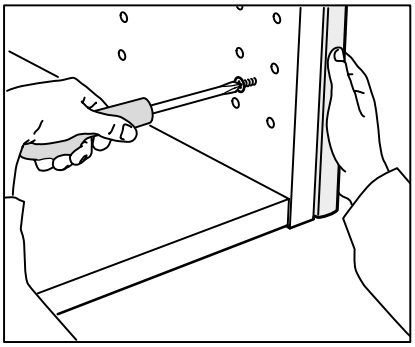

If you are using a high cabinet, fit with a cover panel first.

Filler pieces

Filler pieces are used between your cabinets and walls for a streamlined appearance, and to ensure there is enough room to fully open doors and drawers. They are especially useful if your walls are not perfectly straight.

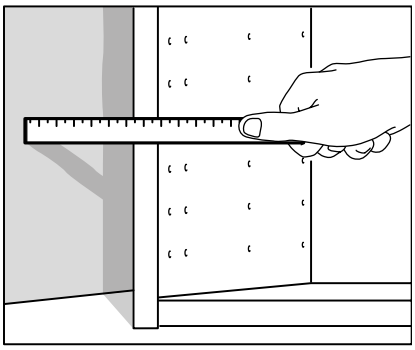

To ensure the filler piece stays in place, first fasten a support strip to the wall. Drill holes in the cabinet for the screws you'll use to fasten the cabinet and filler piece together. Put the filler piece into place. Put screws through the holes you have drilled. When all your filler pieces are in, caulk around each one with silicone for an airtight seal. Make sure not to use screws where your hinges or shelves will be placed.

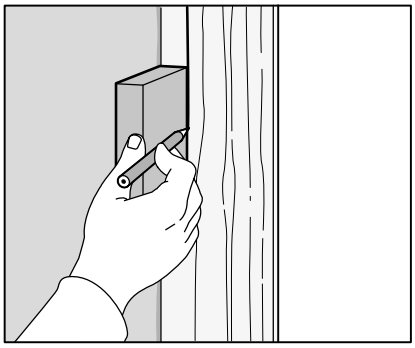

If the wall is not level and flat, the filler piece must be cut to fit to the wall's shape. To do this, you'll need a filler piece, measuring tape, small block of wood about 1–1⅓" thick and pencil. Cut the filler piece so it's the same height as the cabinet. Place the edge of the filler piece against the wall. Hold the block of wood flat against the wall with the pencil against it. Keep them pressed against the wall as you slide them down the length of the filler piece. Now you have traced the shape of the wall onto the filler piece. Cut along your trace line.

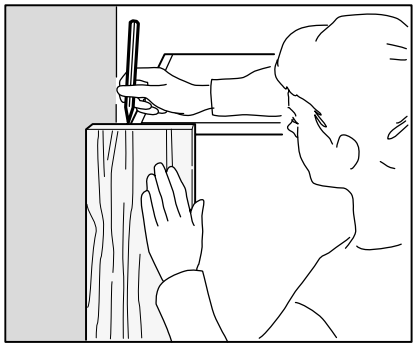

Place the newly cut edge of the filler piece against the wall (it should fit perfectly). Mark the edge of the cabinet on the top and bottom of the filler piece. Draw a straight line from these points and cut.

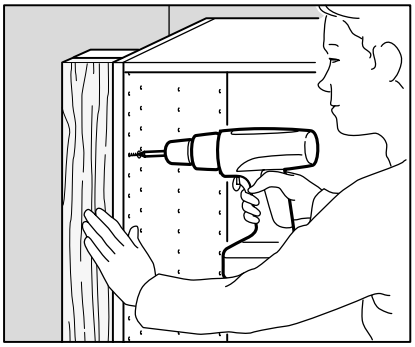

To ensure the filler piece stays in place, first fasten a support strip to the wall. Drill holes in the cabinet for the screws you'll use to fasten the cabinet and filler piece together. Put the filler piece into place. Put screws through the holes you have drilled. When all your filler pieces are in, caulk around each one with silicone for an airtight seal. Make sure not to use screws where your hinges or shelves will be placed.

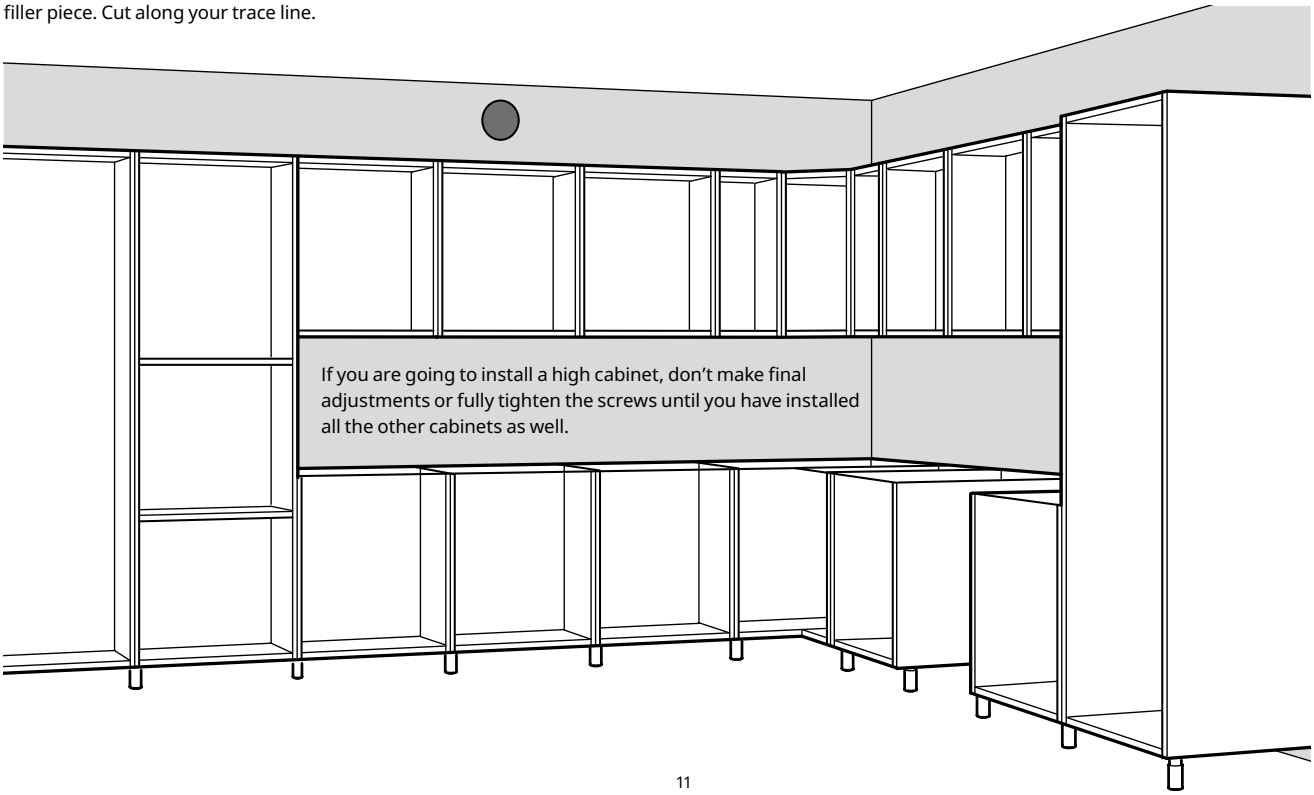

If you are going to install a high cabinet, don't make final adjustments or fully tighten the screws until you have installed all the other cabinets as well.

Install your countertop, sink, lighting, appliances and kitchen island

With your cabinet frames in, it’s time to install your countertop, sink, lighting and appliances. Check that your countertop is the correct size before fitting it in place. Now is also the time if you need to customise your countertop for a sink or cooktop. **Note!** Always use your assembly instructions for help.

Once your countertop is in, you’re ready to get your water, gas, lighting and appliances connected. All water, gas and electricity connections must be done by qualified professionals according to valid local safety regulations.

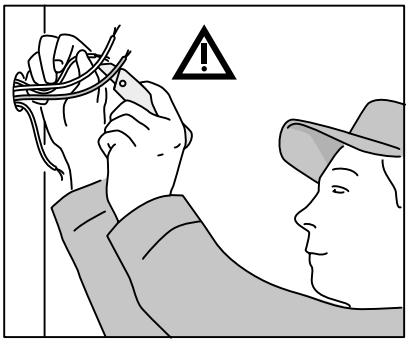

All electrical connections must be made by a qualified electrician.

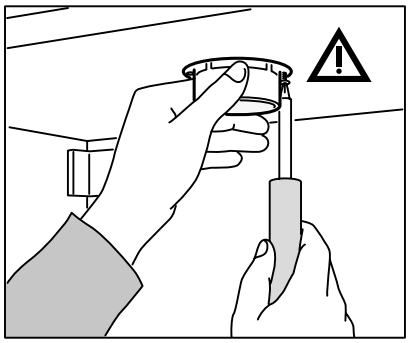

Install your lighting and appliances. If drilling holes, use a piece of wood to meet the drill as it penetrates the surface to avoid the edges from splintering.

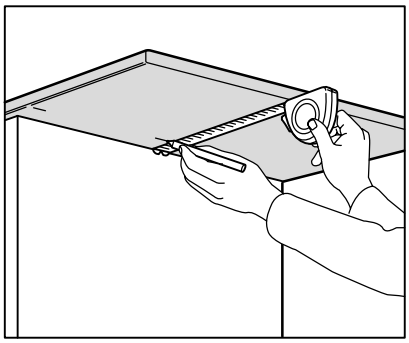

Proof measure your countertop. if you have a pre-cut countertop now is the time to cut it to the right length. To avoid splinter, cut with the countertop underside facing up when using a buzz or jig saw, but with the top if using a handsaw.

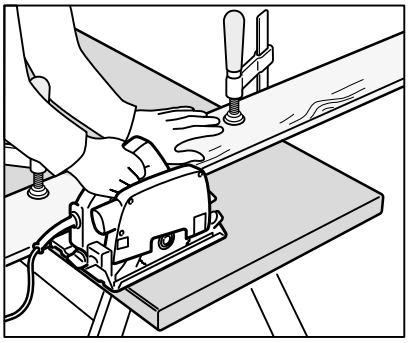

Use a circular saw and G clamps to hold a straight-edge to your pre-cut countertop when you cut to customize the size. It’s helpful to use a pair of trestles to help you. A tip is to have a second person holding the piece to be cut off to avoid the edge from splintering.

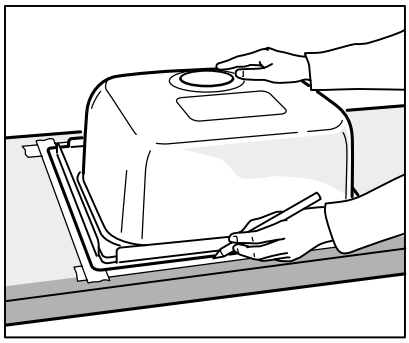

Mark a spot for the sink by laying the countertop in place. Trace the inside of the base cabinet onto the underside of the countertop. This helps you align your sink. Turn your countertop over and trace the outline of your sink onto masking tape.

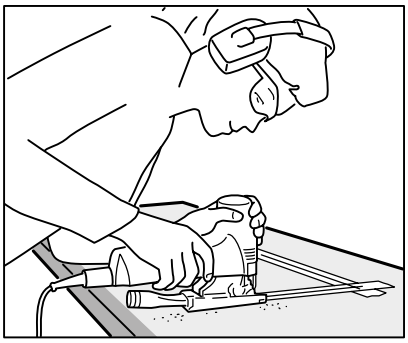

Use a jigsaw to cut out space for your sink. It’s helpful to drill a hole on the inside corners of your outline before cutting, so you can make a cleaner cut.

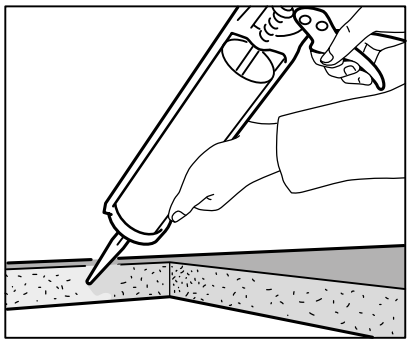

To prevent moisture from penetrating the countertop apply polyurethane silicone across the sawn edges.

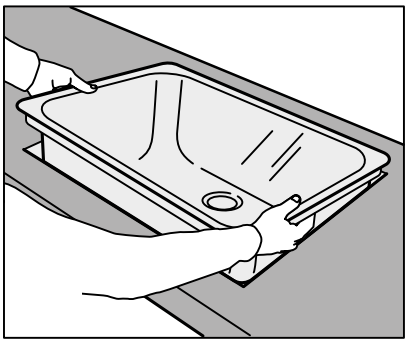

Install sink into the countertop according to the assembly instructions.

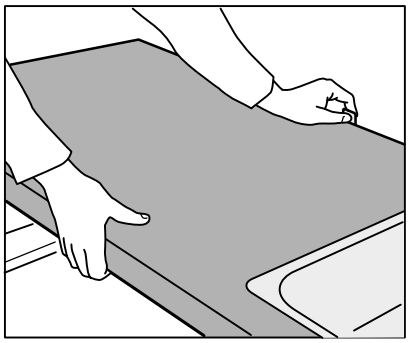

Secure your countertop in place according to the assembly instructions.

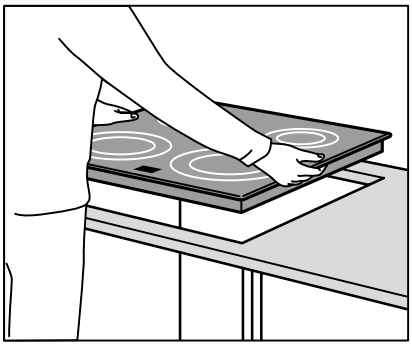

Customize your countertop for your cooktop in the same fashion as for your sink. See your cooktop's assembly instructions for help.

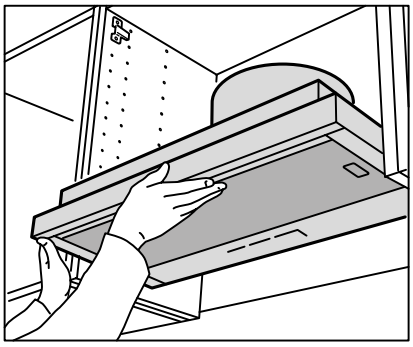

Install the extractor hood. The extractor hoods at IKEA can be installed in two ways: either ducted to the outside, called extraction, or used in recirculation mode fitted with a charcoal filter. Each installation option is described in the assembly instructions that come with the product.

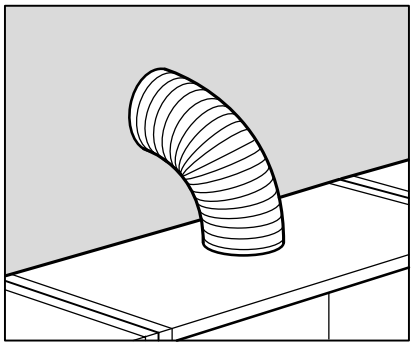

Saw the hole either in the back panel or in the top of the cabinet. See the assembly instructions. For safety and functionality reasons, follow precise measurements in the instructions for installation that come with the extractor hood/fan.

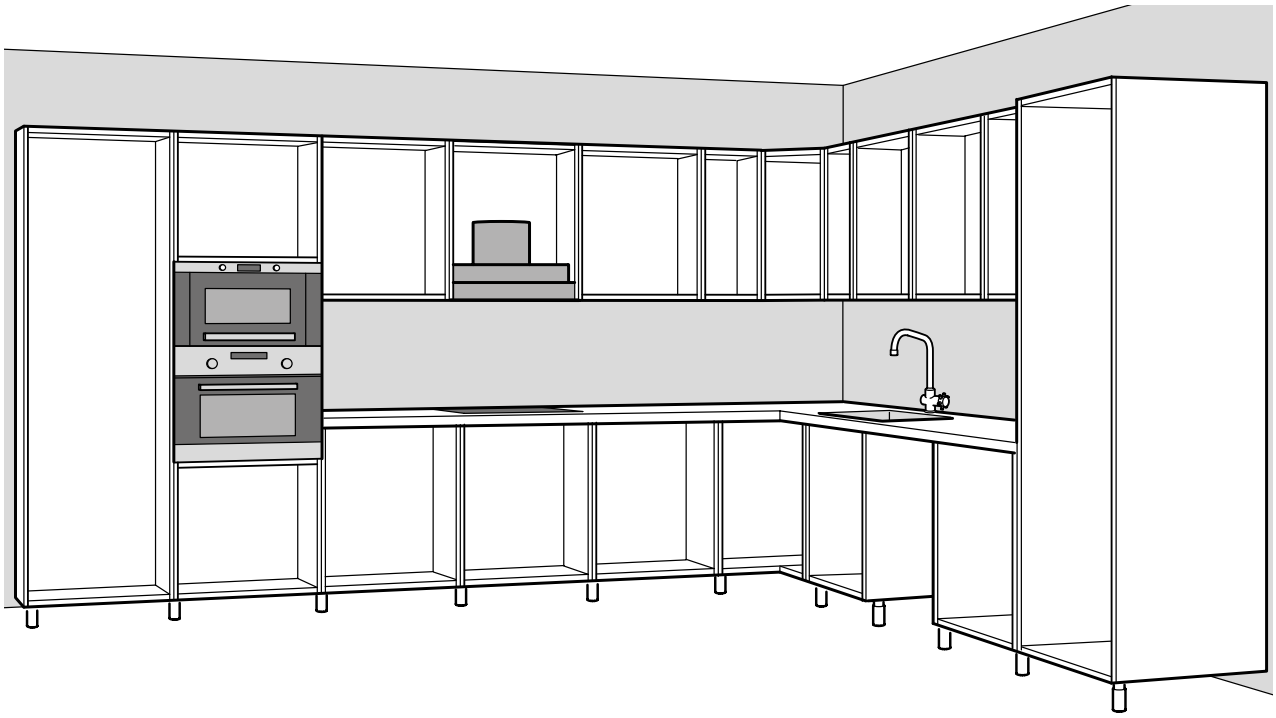

Kitchen island

If you're planning for a kitchen island we have an island assembly kit to fasten it firmly to the floor. Legs/plinths must then be fitted around the outside of the island.

Contact your local IKEA store if you need help regarding the assembly.

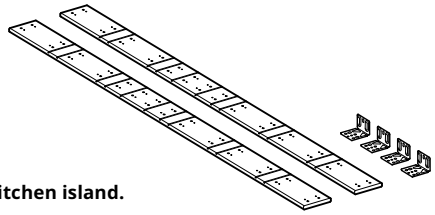

SEKTION assembly kit for kitchen island.
002.984.11

Good to know

If you're installing a kitchen island, it must be secured to the floor using the SEKTION island assembly kit. Fasten the island assembly kit to both the floor and the cabinets. When attaching the island assembly kit to the floor be aware of amenities like floor heating or plumbing already installed.

Install your shelves, drawers, doors, knobs and handles

Now your cabinet frames, countertops and appliances are in, fit your drawer slides into your cabinets. Remember that the slides for inner drawers and standard drawers are fitted in different ways. Once the slides are in, fit in your drawers before your doors and shelves.

Finish up by adding knobs and handles as well as any other internal solutions (like wire baskets).
Note! Always use your assembly instructions for help.

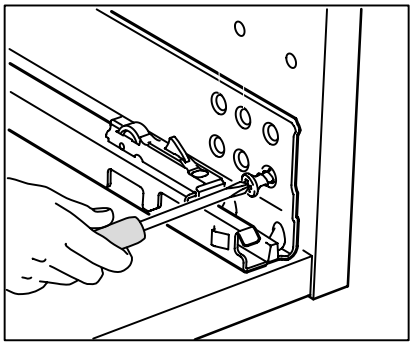

Fasten your drawer slides, starting with your outer drawers. Outer drawer slides should be attached to the outer row of holes in your cabinet.

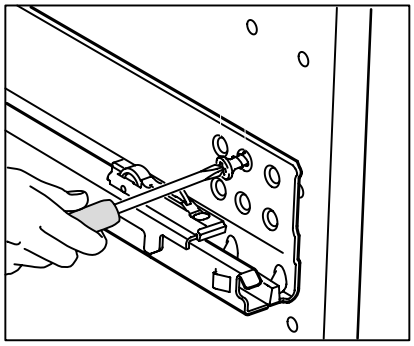

Once your outer drawer slides are in, fit your inner drawer slides. The inner drawers slides are fitted to the inner row of holes in your cabinet.

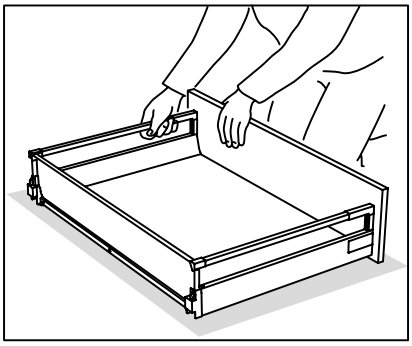

Assemble your doors and drawers.

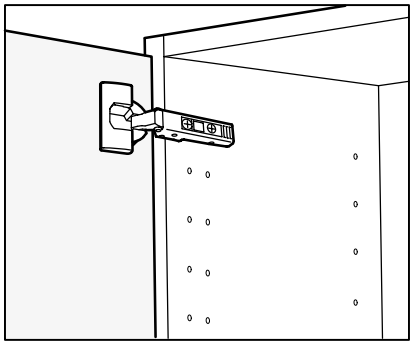

Attach the hinges for your doors.

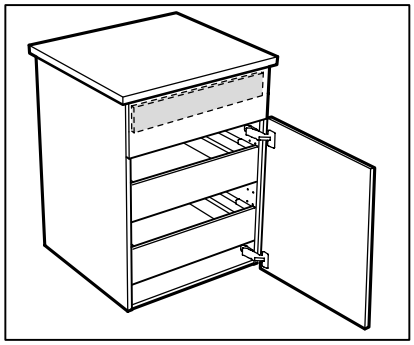

Fit your drawers and doors to your cabinets.

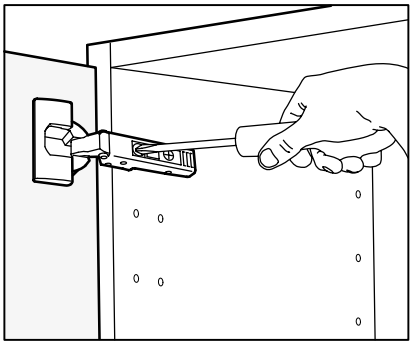

Align your doors to the correct height and width by adjusting the screws on the hinge plate.

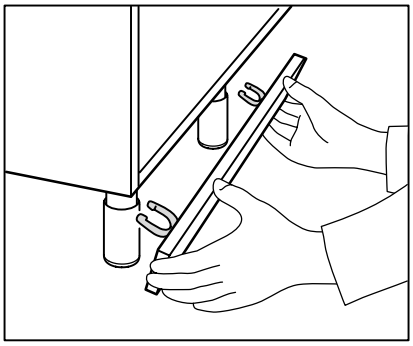

If you're fitting a plinth now is the time to attach it. Follow the assembly instructions for help.

You're done! Congratulations on your new SEKTION kitchen!

Caring for your cabinets

Clean the doors, cabinet interiors and wood surfaces with a soft, damp cloth. Only use cleaning products intended for these materials. Do not use products that contain ammonia, alcohol, bleach or abrasives. Rinse with clean water, then dry with a clean, dry cloth. Make sure to clean up spills quickly.

Keep your sink sparkling

After each use, wipe the sink clean with a cloth or sponge damped in water or a non-abrasive detergent, if necessary. Rinse the bowl with water and then wipe the sink with a dry cloth. Avoid scouring-powder, steel wool, or hard objects which can scratch the stainless steel or any other surfaces. The damp surface can be discoloured if substances containing iron, such as steel wool, nails or gravel, are allowed to remain on it. Discolouration is caused by the foreign material.

Long-lasting countertops

Keep your countertop in top condition by cleaning spills quickly with water and a mild detergent. Be sure to keep them as dry as possible after use. For wood and solid wood countertops use STOCKARYD wood treatment oil. The oil protects the wood from marks, stains and cracks, and prevents water from penetrating the surface.

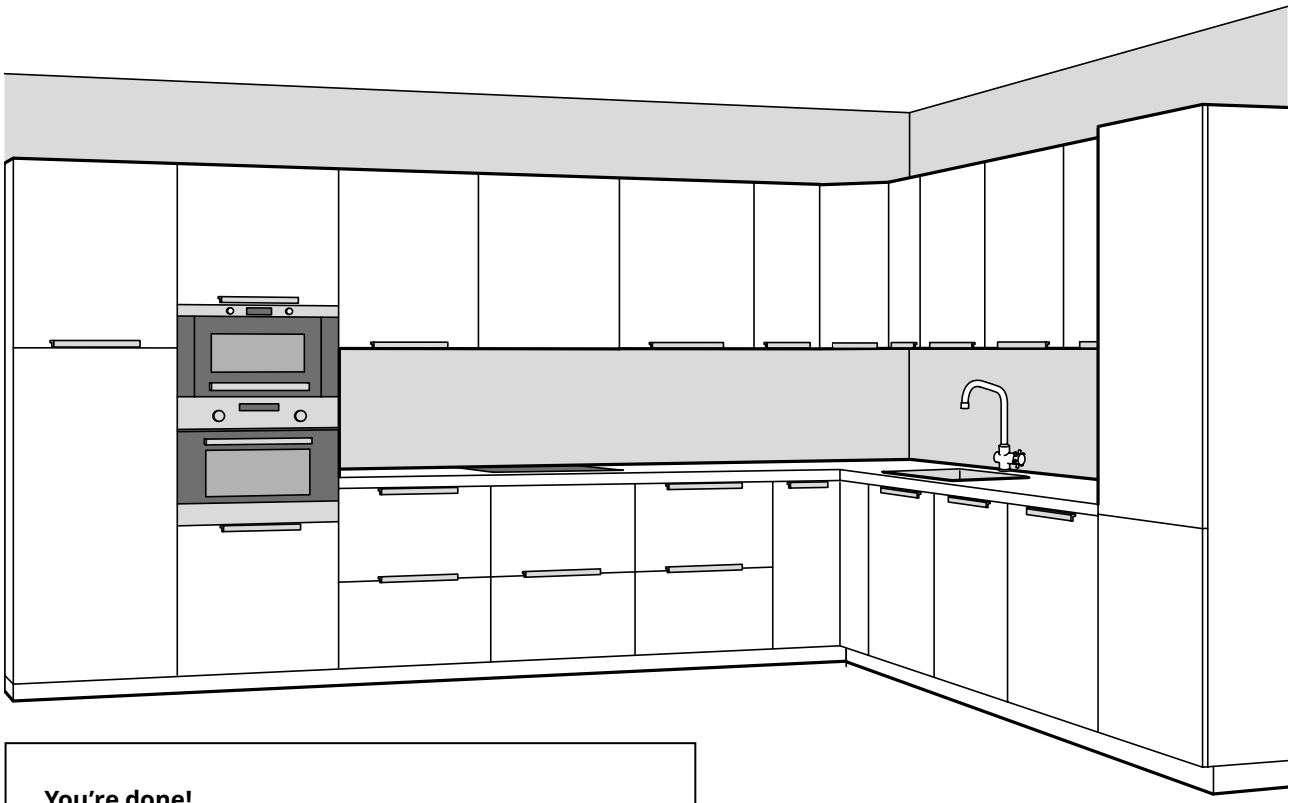

You're done!

Time to step back and admire your new kitchen – and admire yourself for saving so much money by assembling and installing it yourself! With a little care and maintenance your new IKEA kitchen will keep looking its best for many years to come.

Need help ?

You can contact us in different ways:

Online: Read the FAQs at IKEA.ca – they might answer your question: **IKEA.ca/FAQ**

In Person: Speak to us in store – those friendly people in the yellow shirts are ready to help you through your buying process.

By phone: If you ever need to talk to us in person, we're happy to answer your call. You can reach us over the phone at: 1-866-866-IKEA (4532).

Installation Services: Save time and effort with installation.
For full details visit **IKEA.ca/kitchenservices**.

© Inter IKEA Systems B.V. 2020 (June 24, 2024) Canada FY25

A high level of accuracy has been sought in preparing this installation guide, we cannot guarantee that there are no errors or omissions nor will we be bound by them. Please see an IKEA co-worker or visit www.IKEA.ca if more information is needed.