YXSTABY

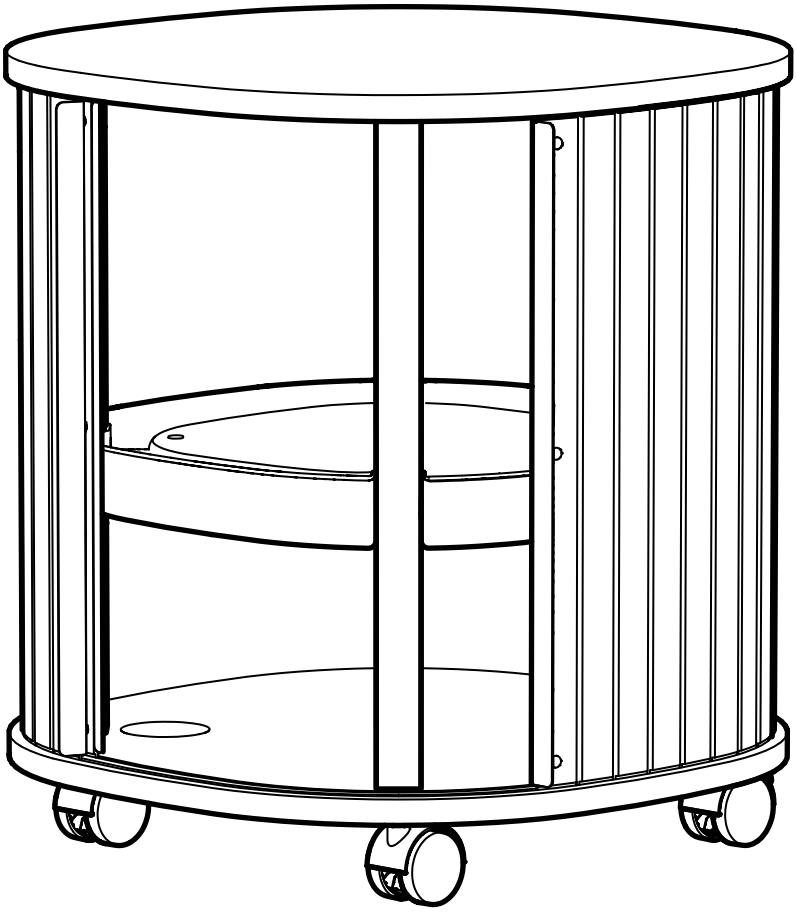

Design and Quality
IKEA of Sweden

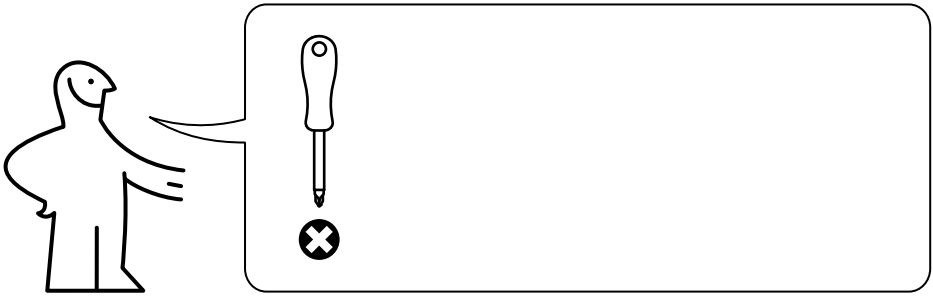

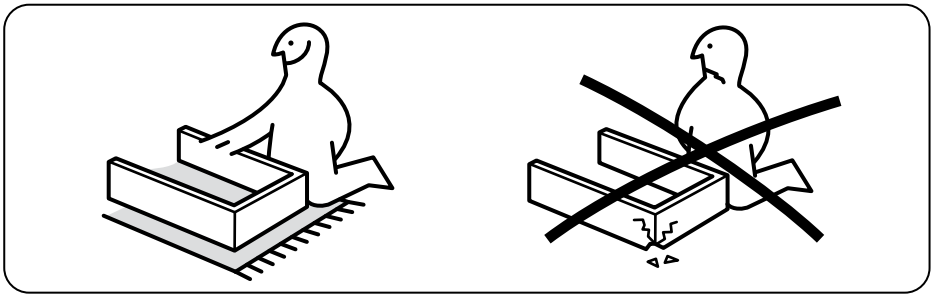

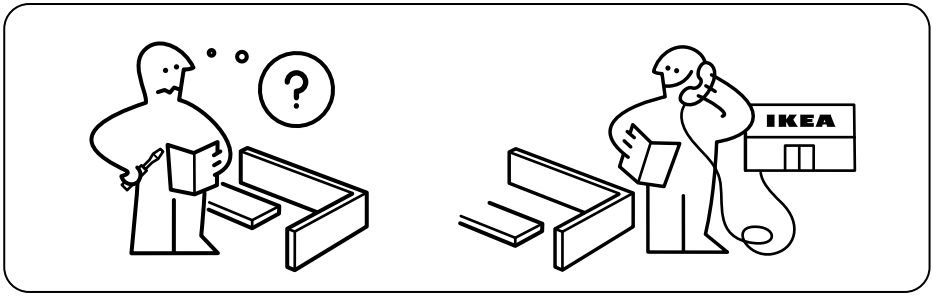

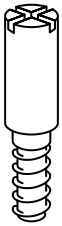
112366

4x


10147218

4x


10220496

4x

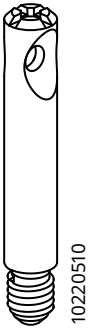

4x

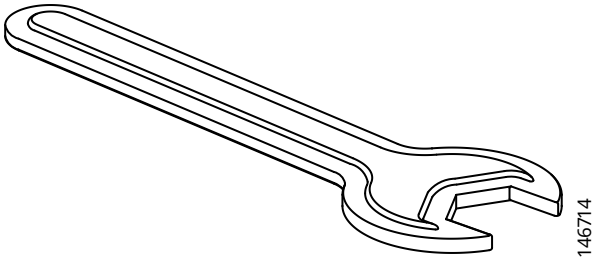

1x

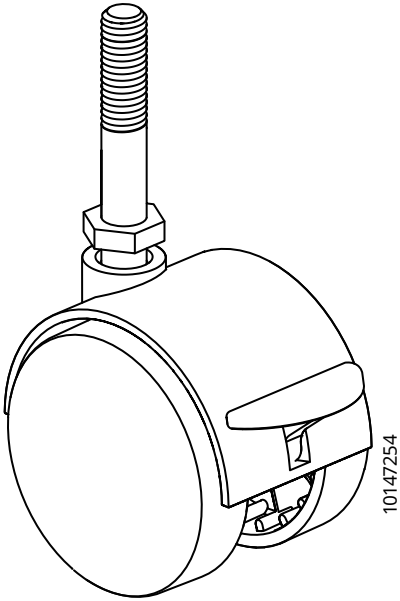

2x

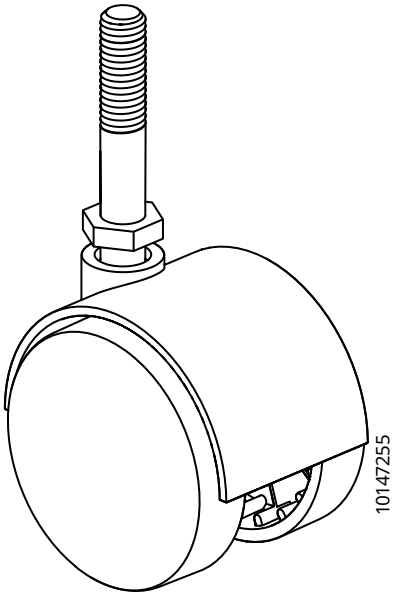

2x

1

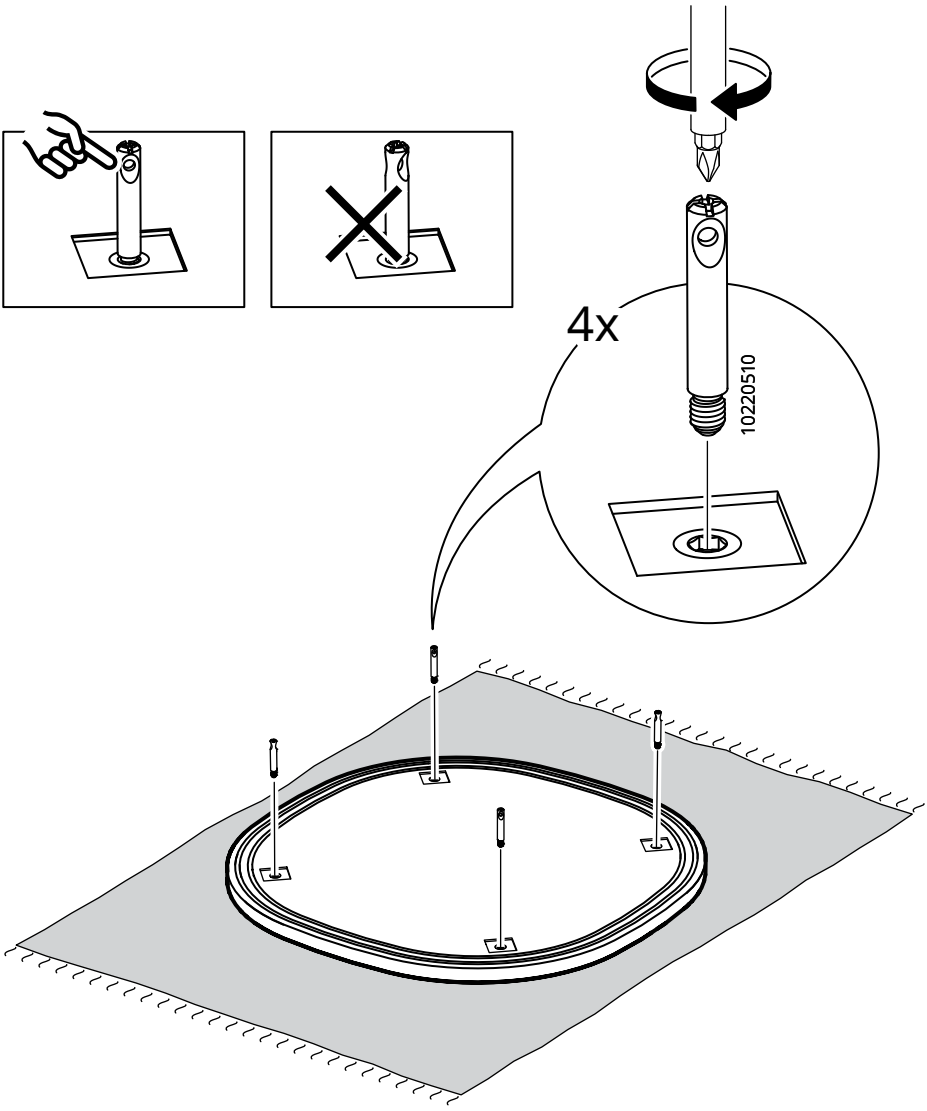

2

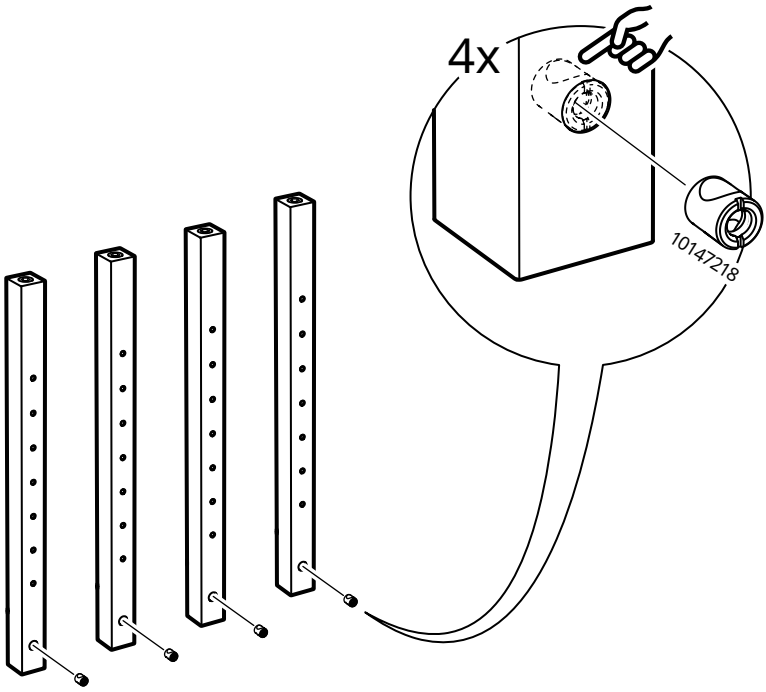

3

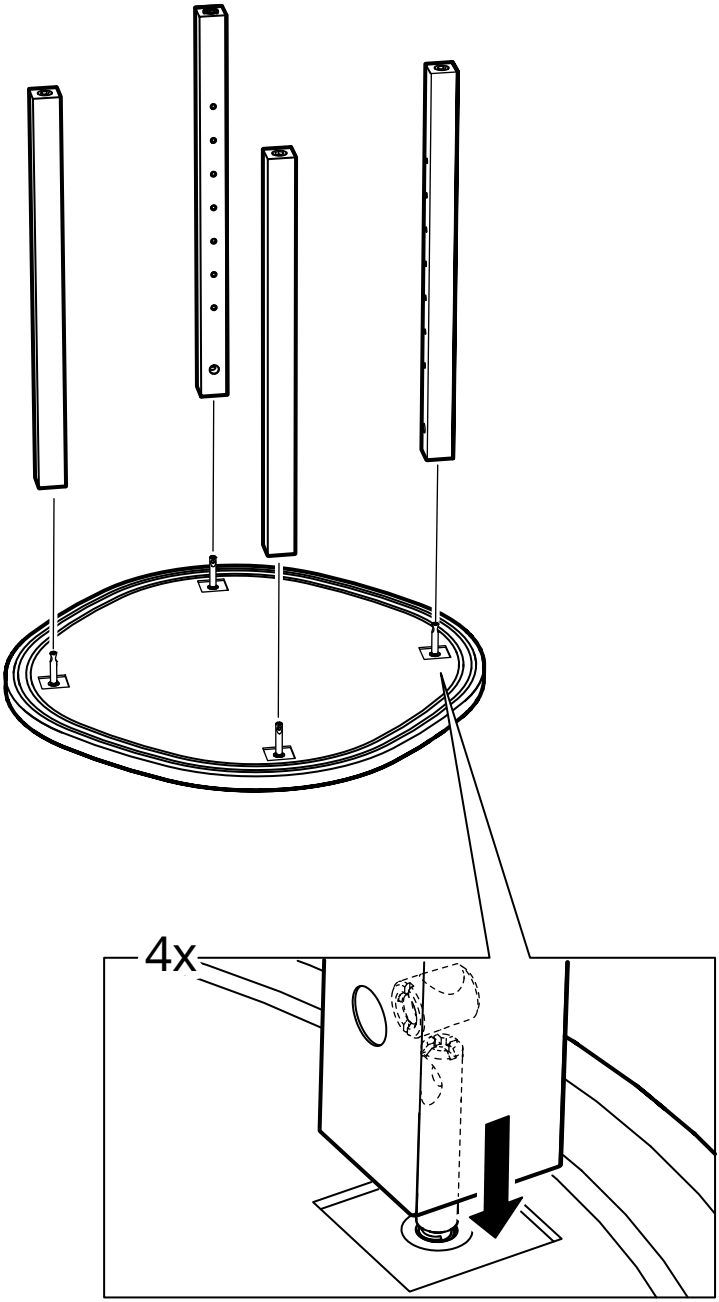

4

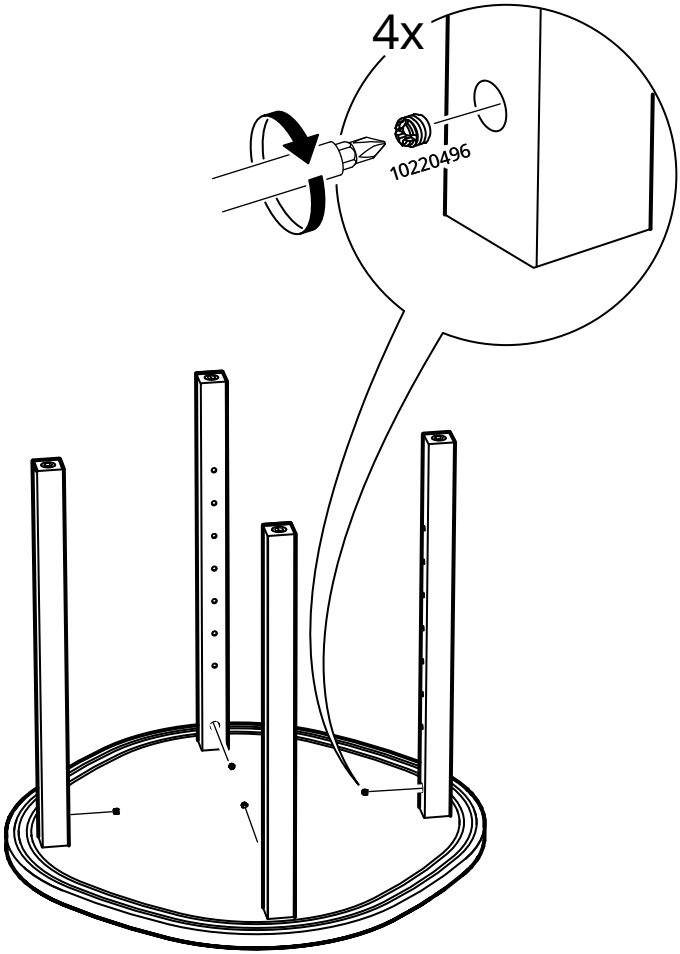

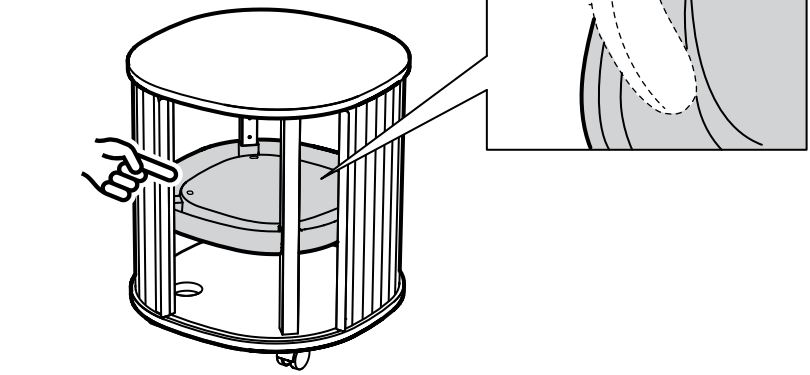

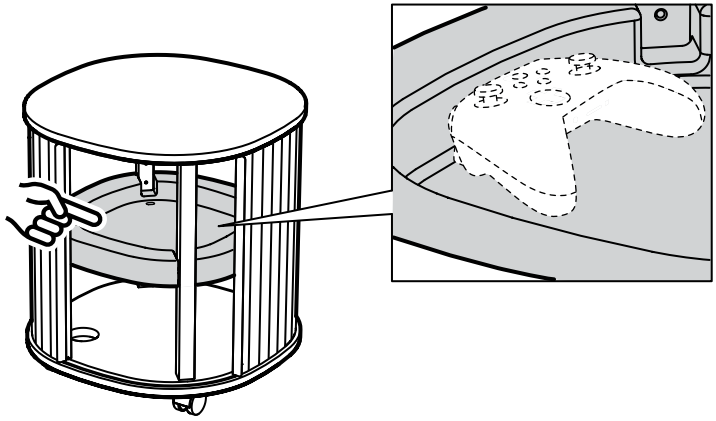

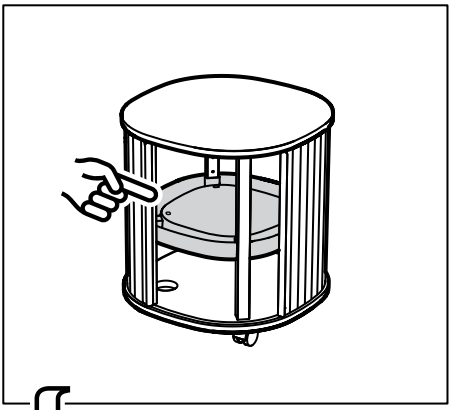

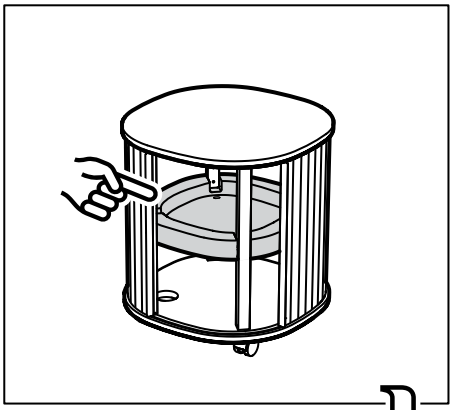

5

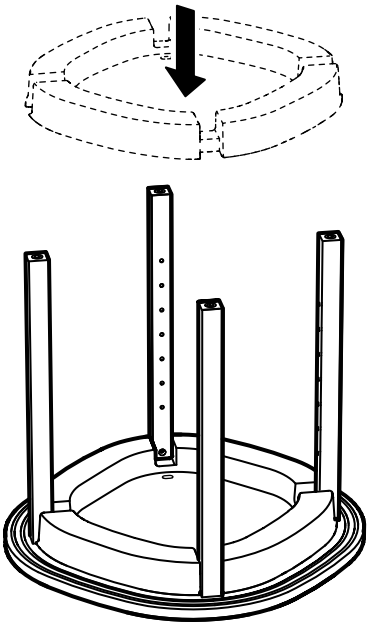

5

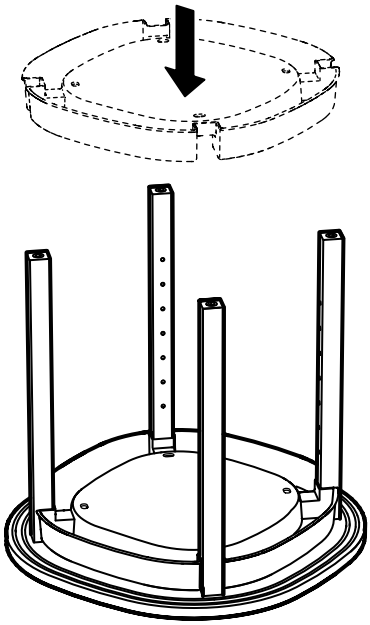

6

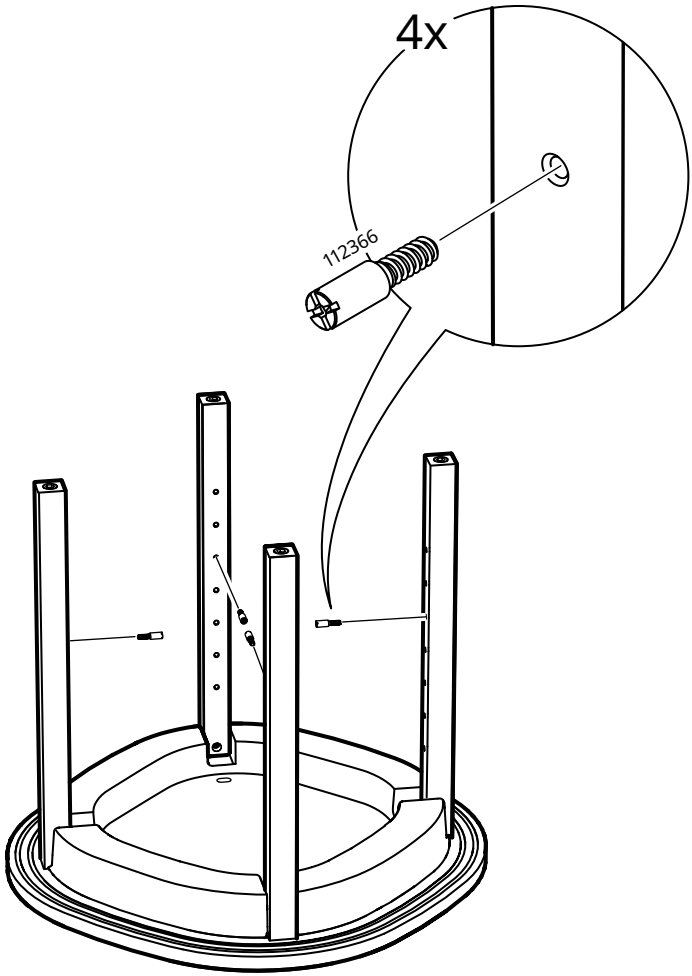

7

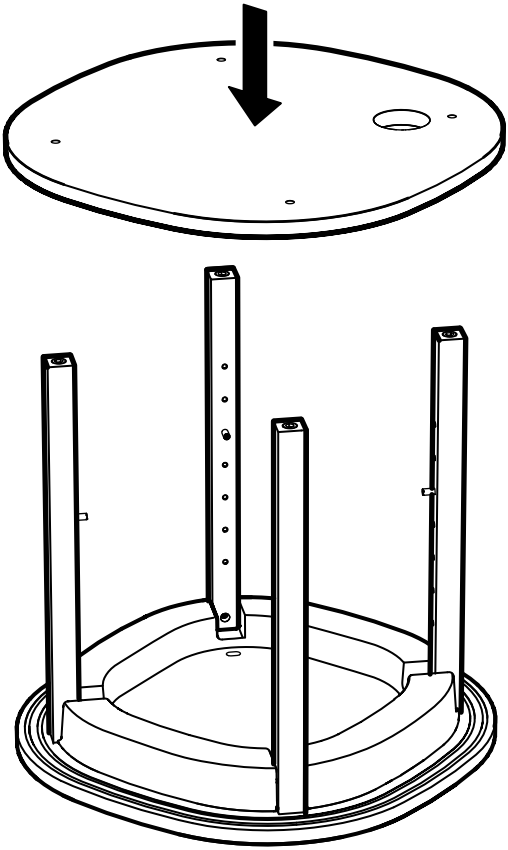

8

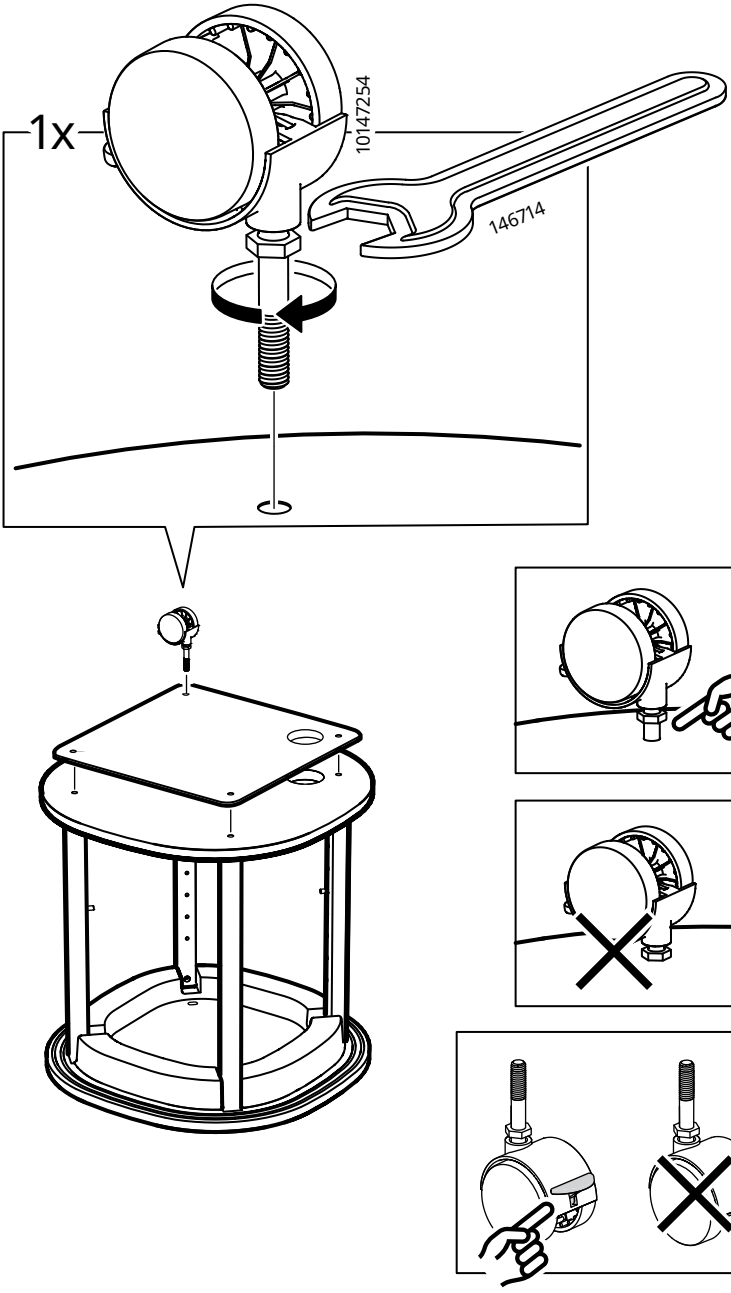

9

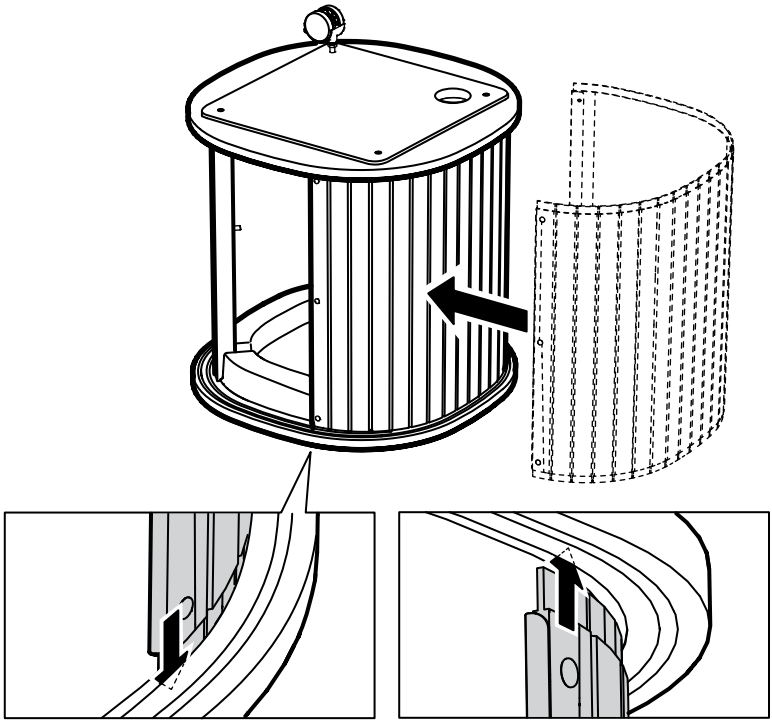

10

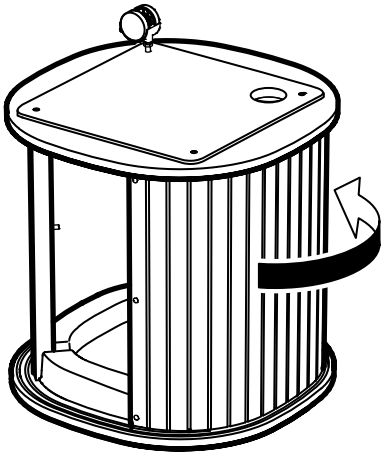

11

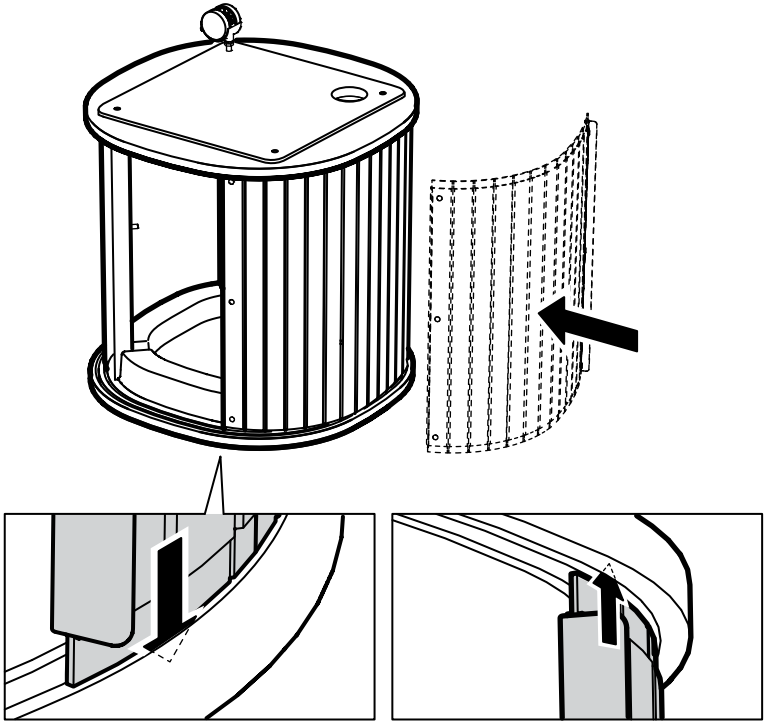

12

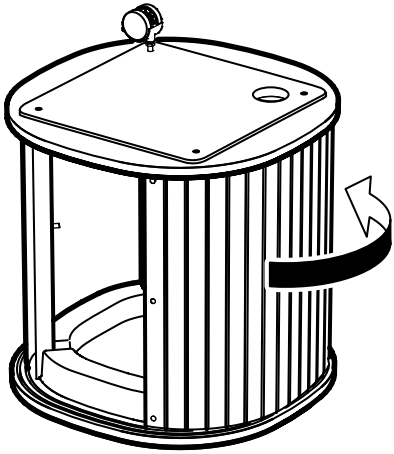

13

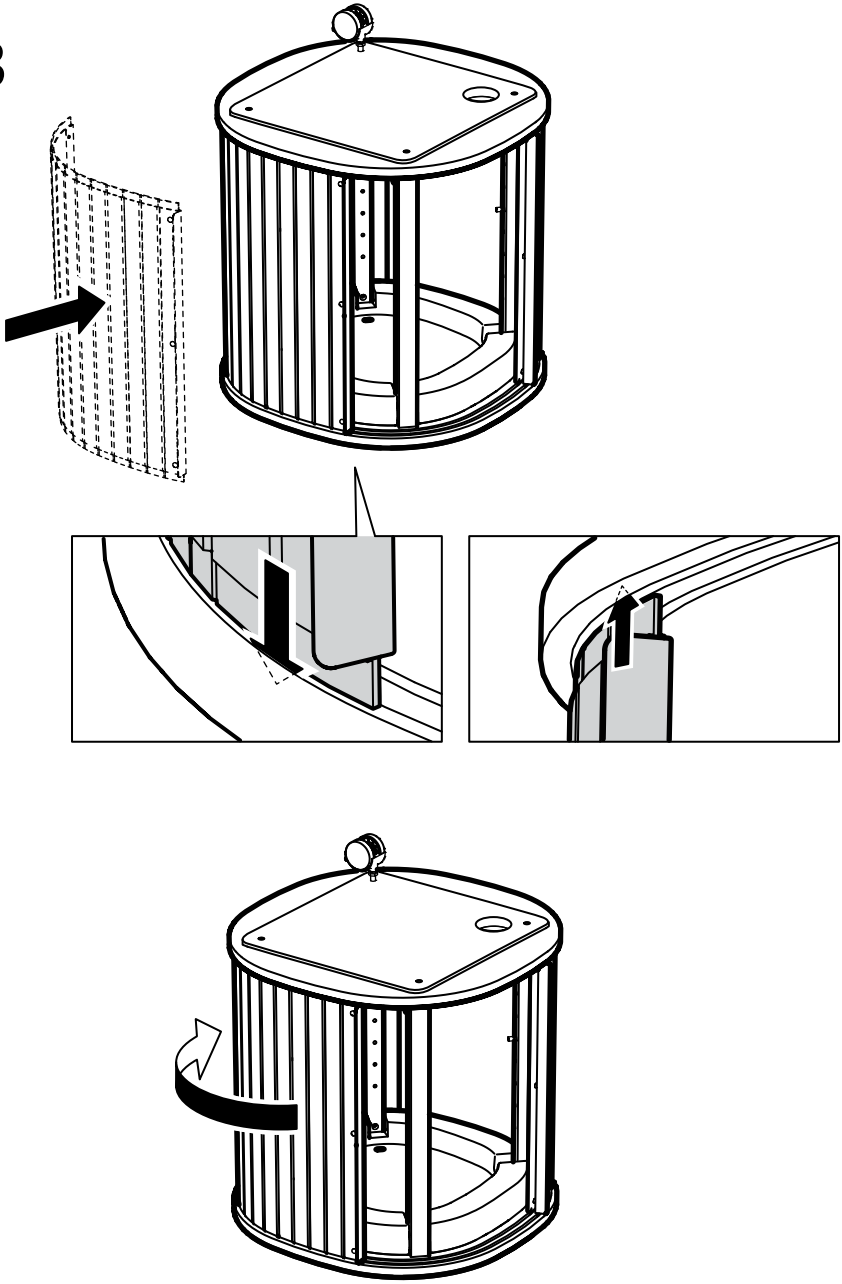

14

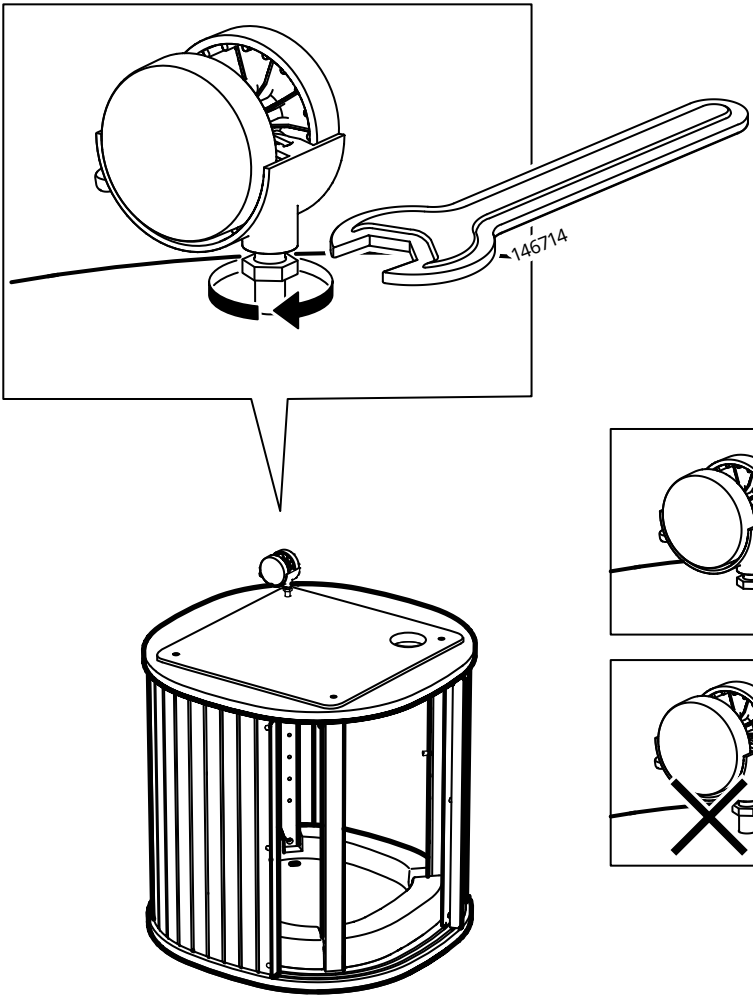

15

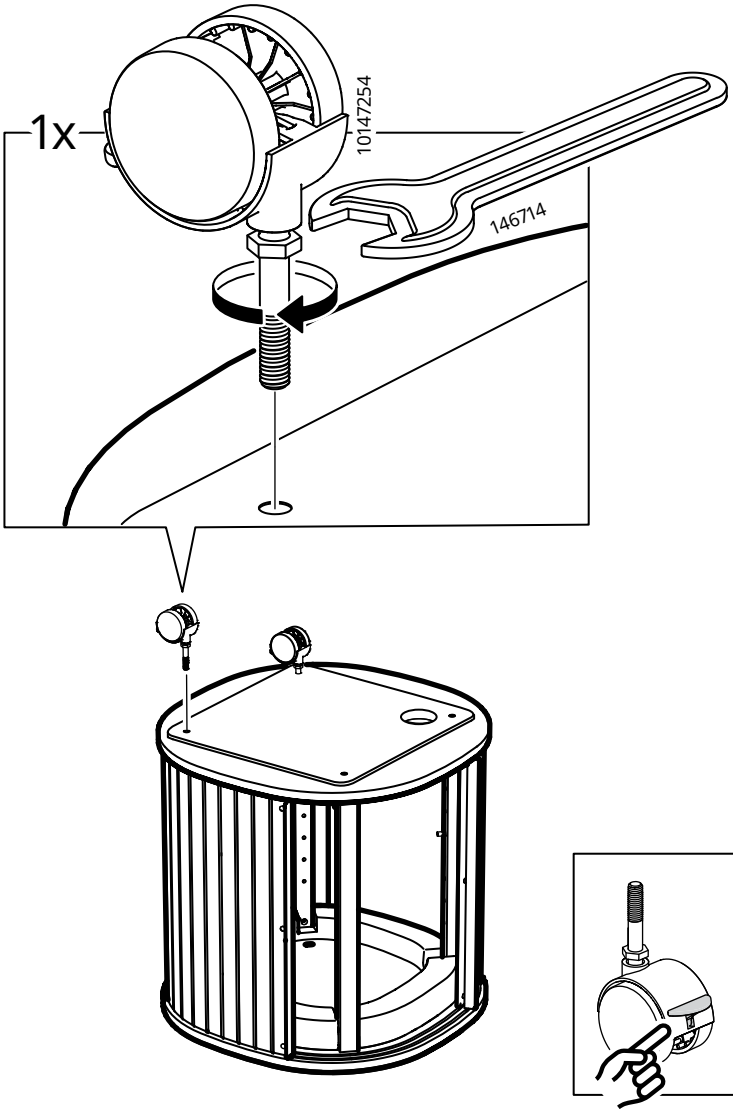

16

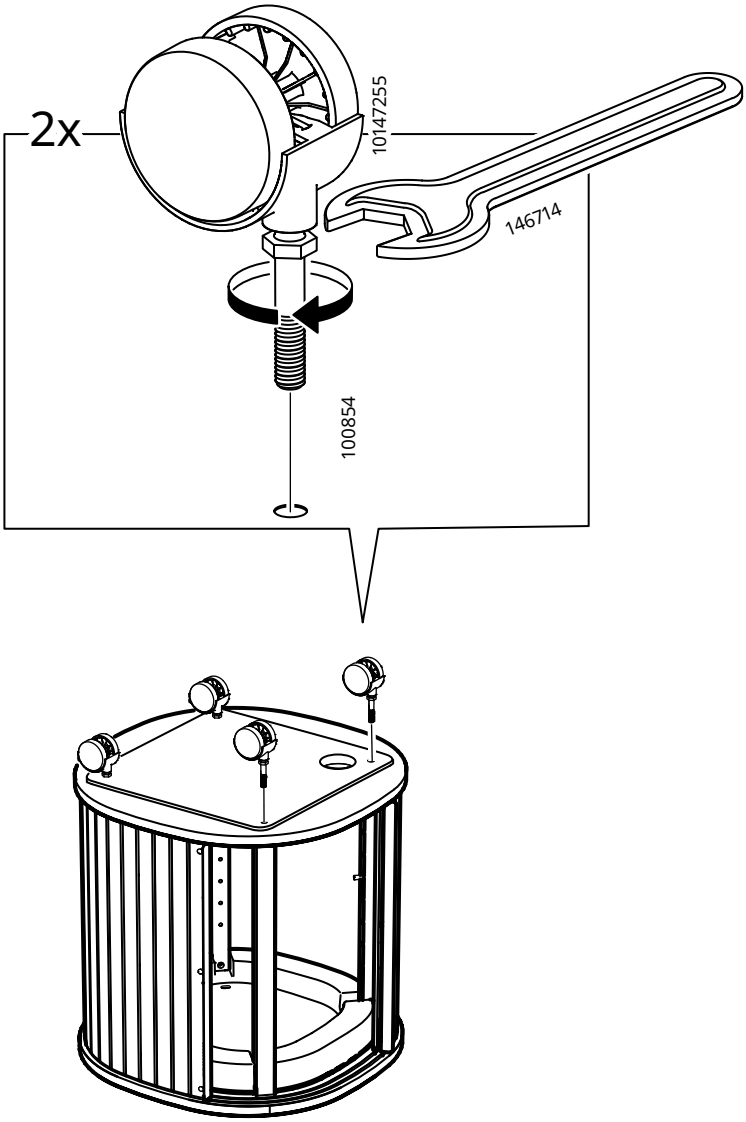

17

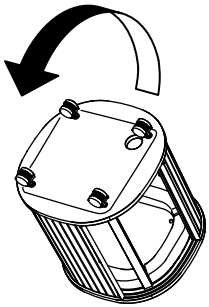

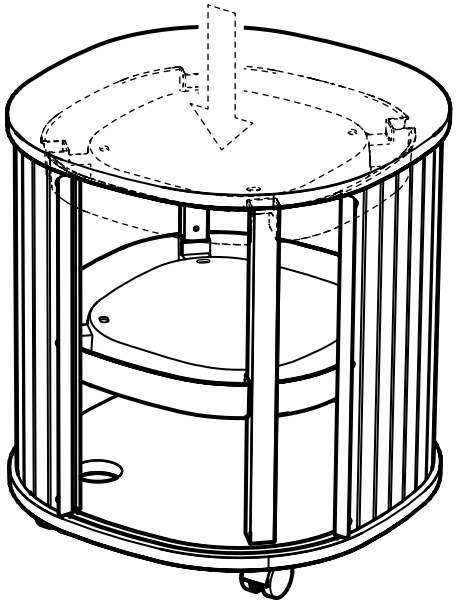

© Inter IKEA Systems B.V. 2025
2026-11-12 AA-2654917-4