NORDKISA

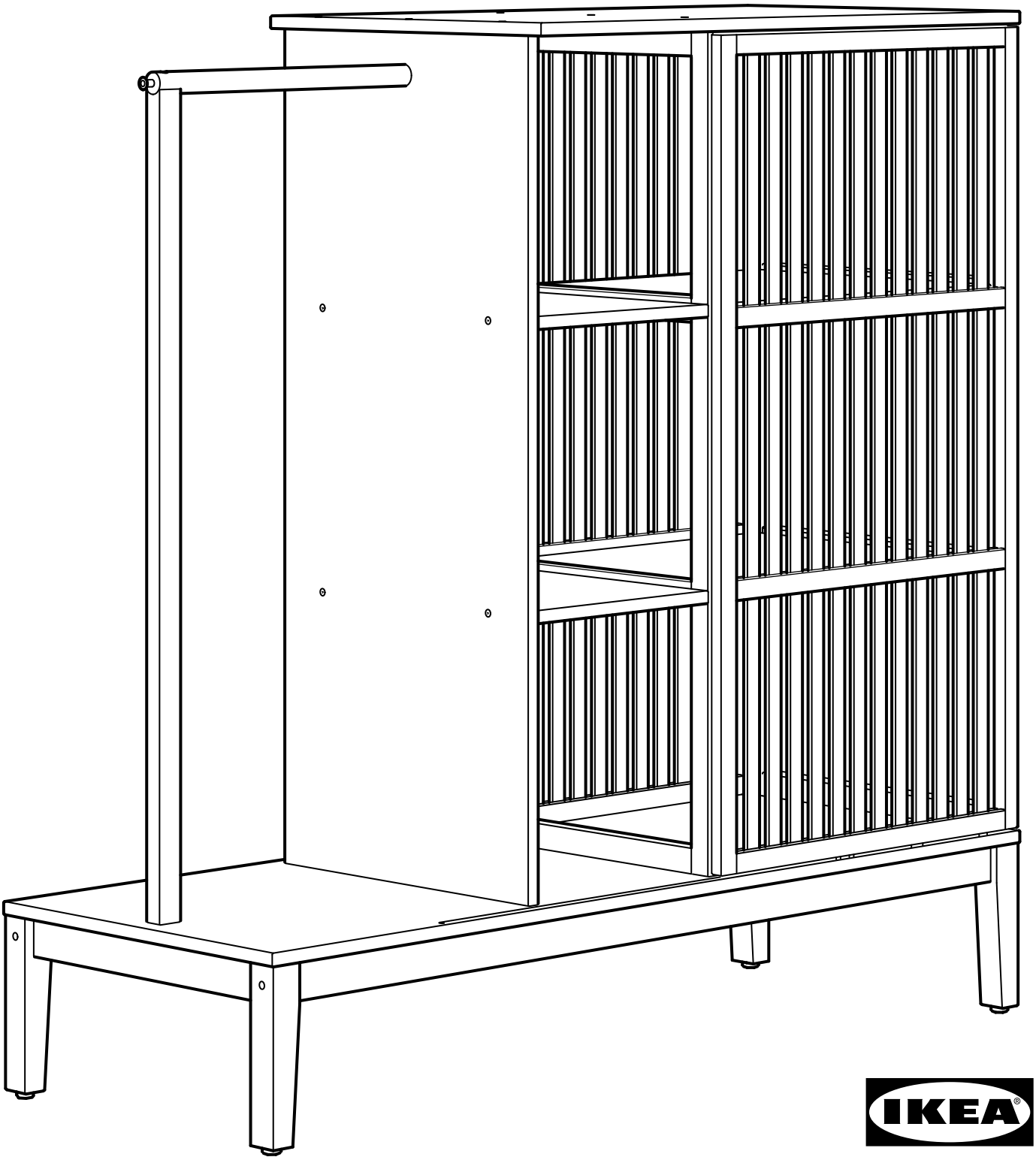

Design and Quality
IKEA of Sweden

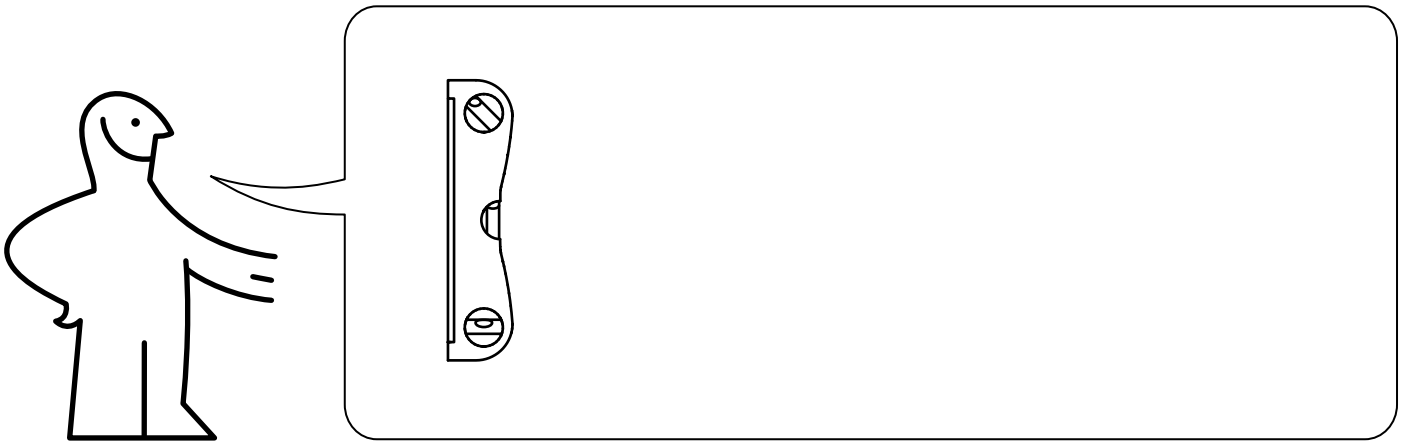

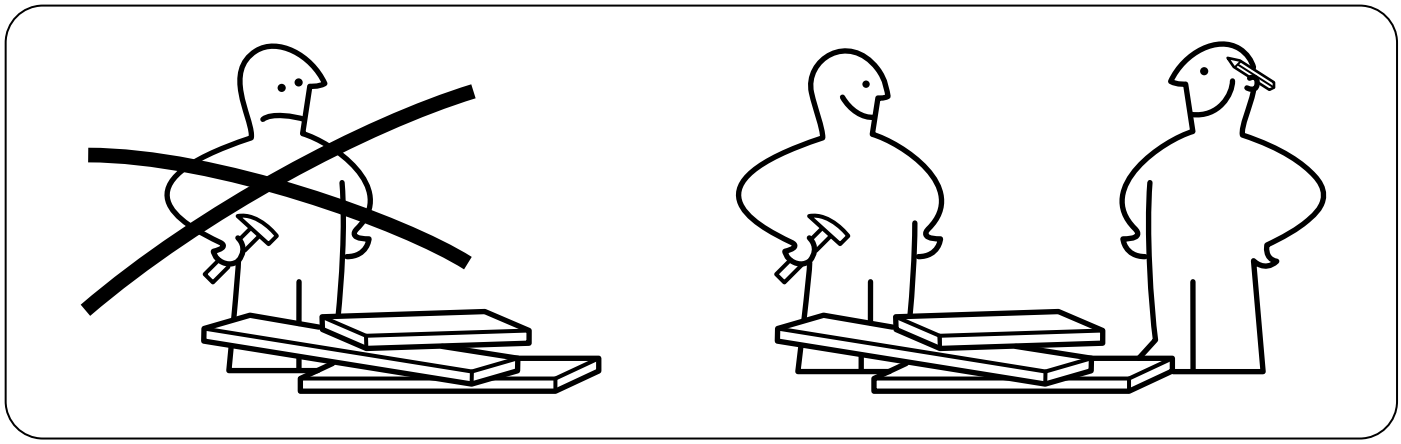

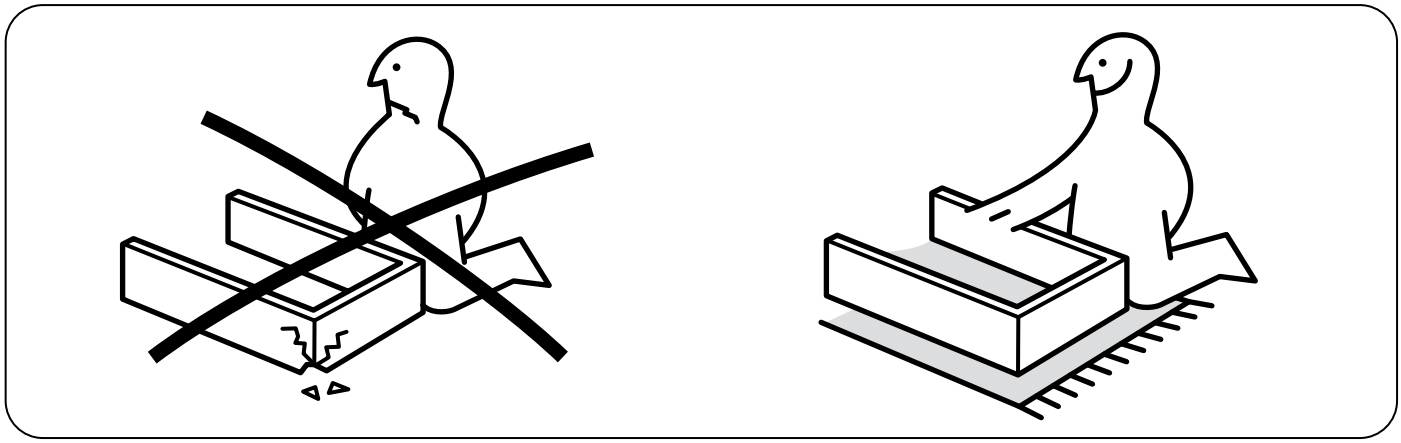

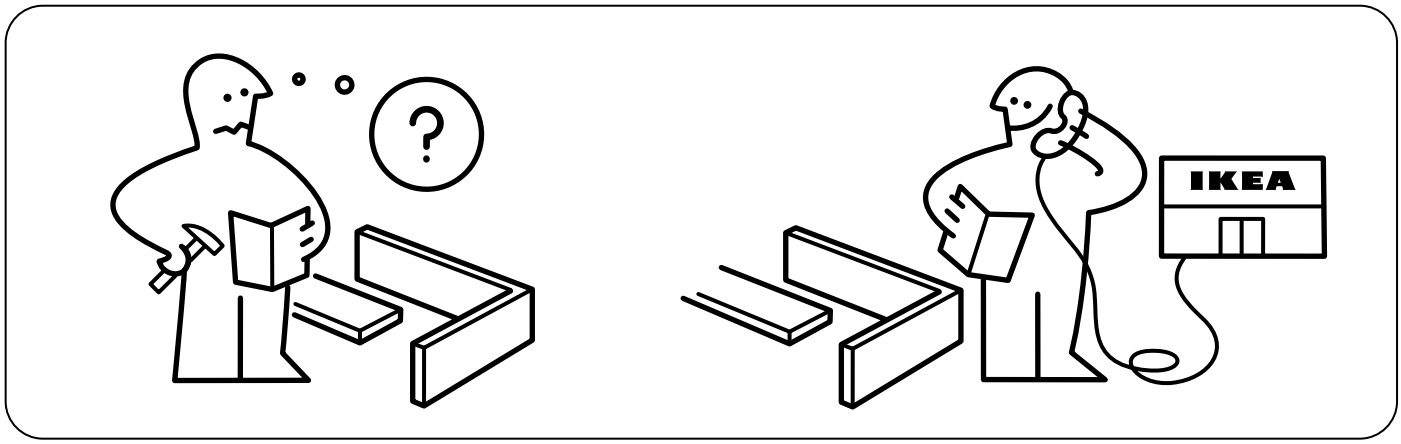
?
IKEA

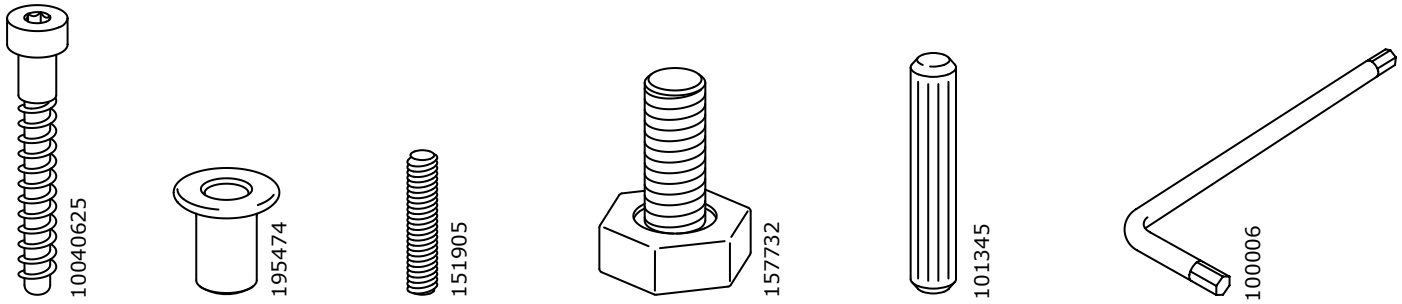

53x 1x 1x 4x 44x 1x

1

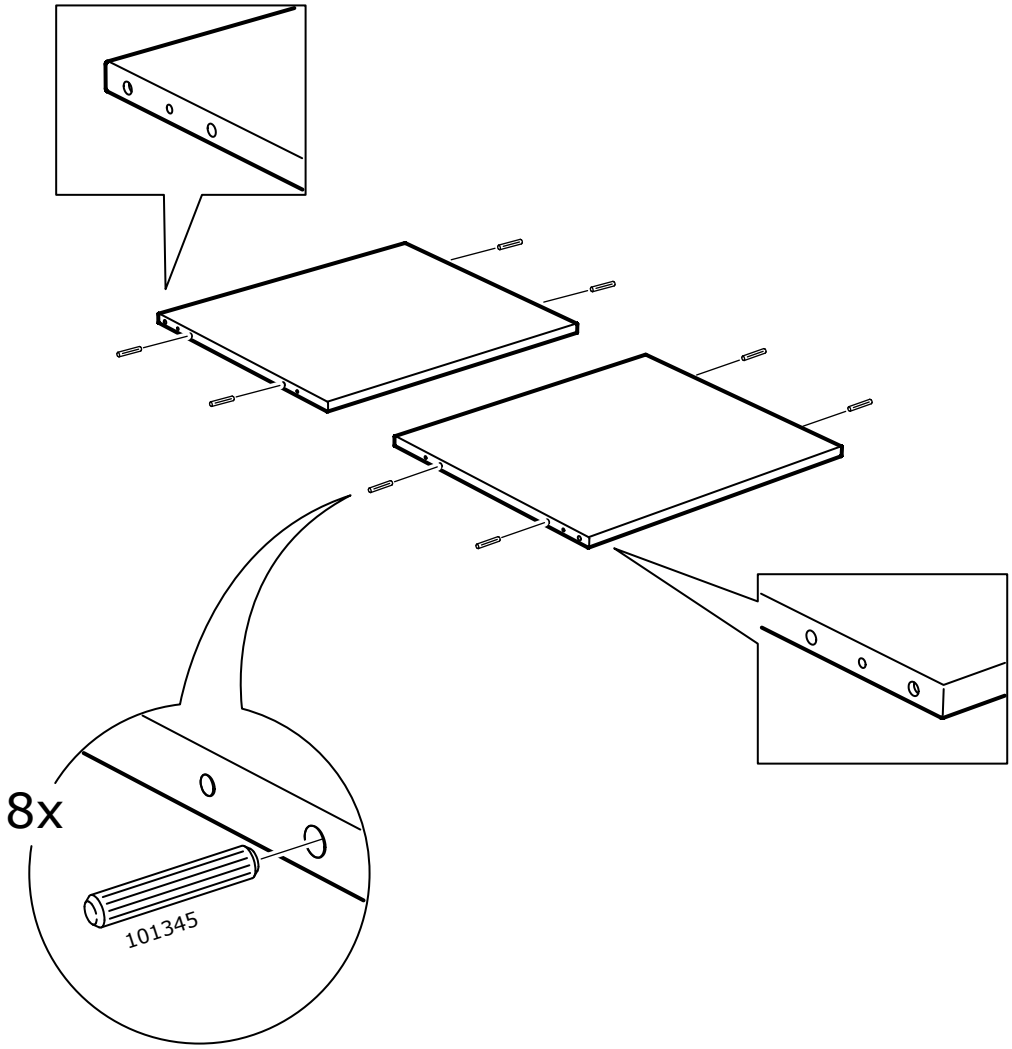

2

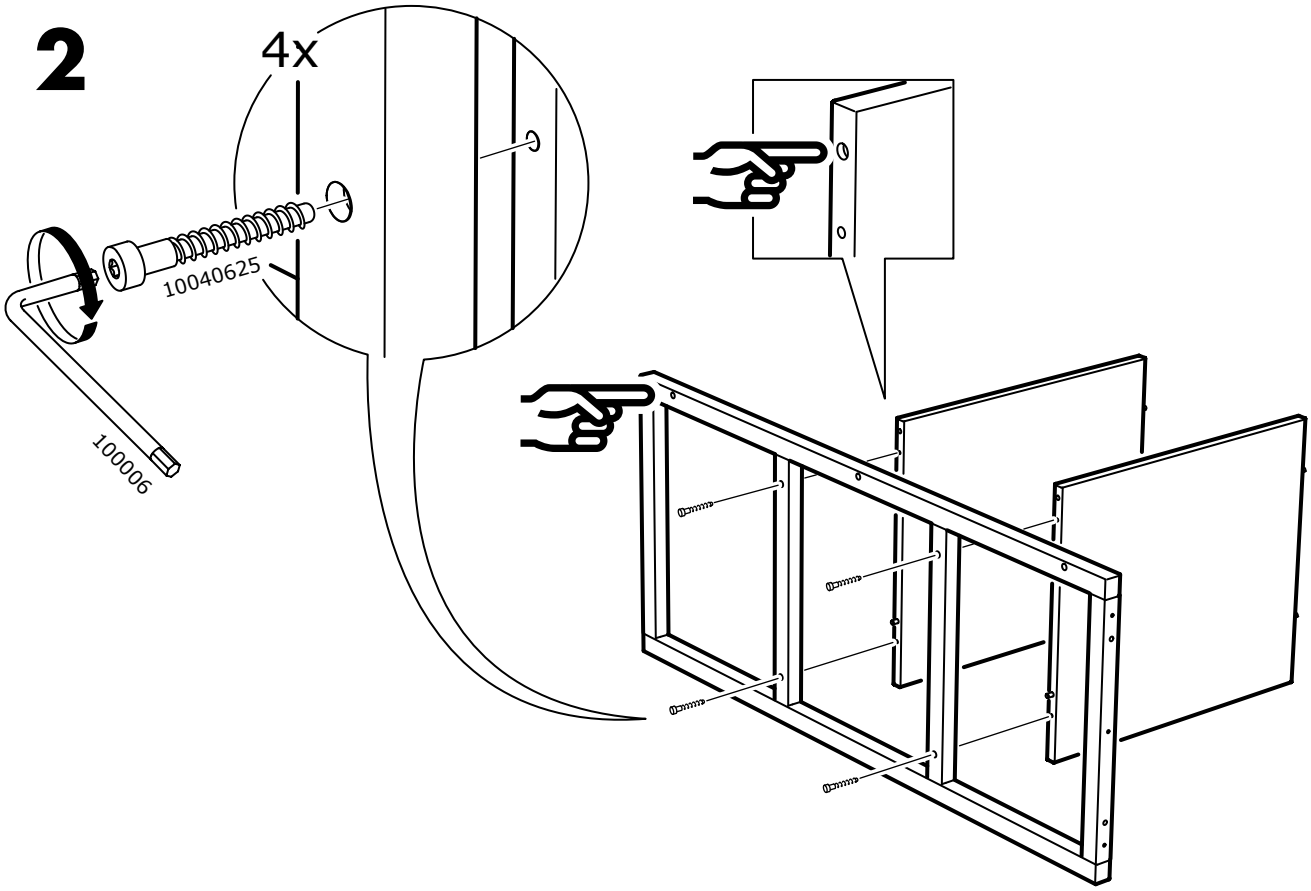

3

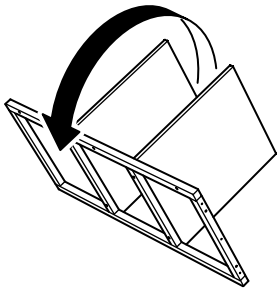

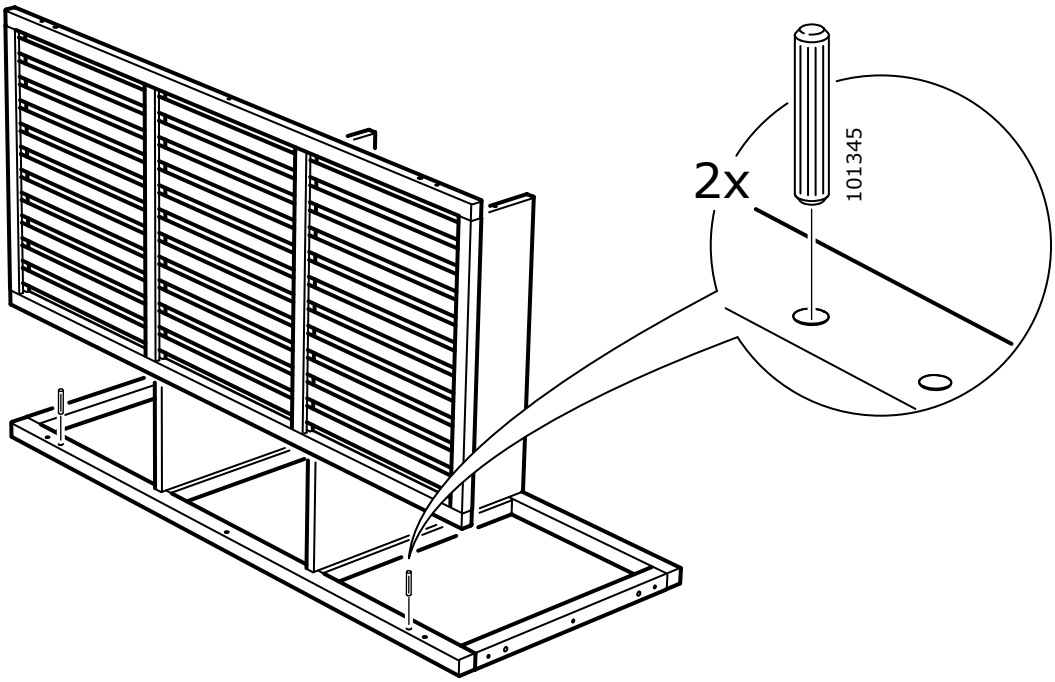

4

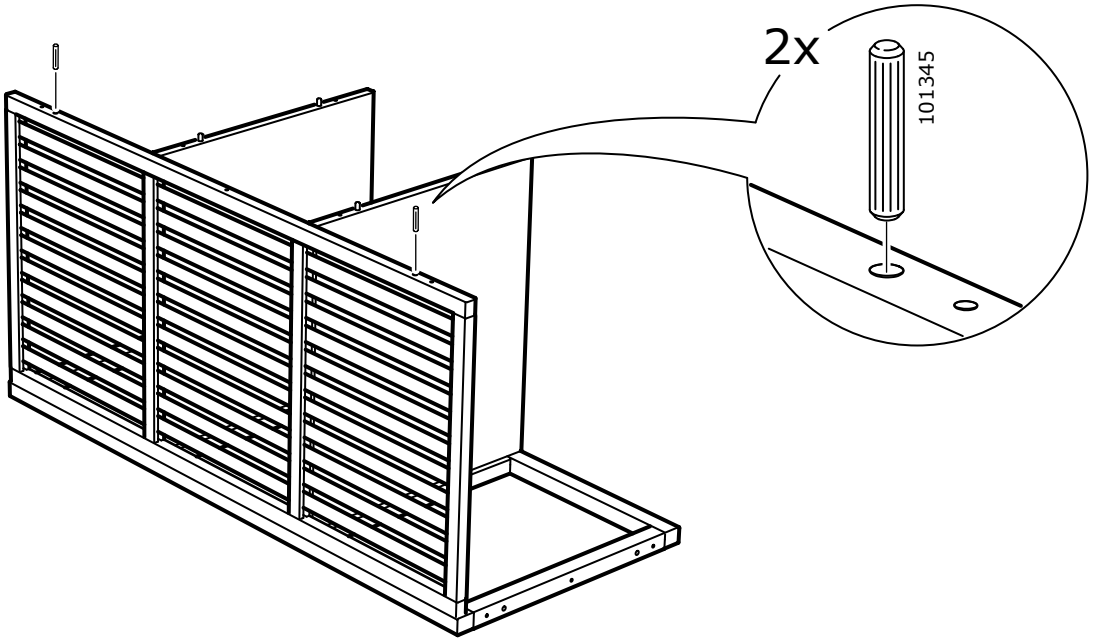

5

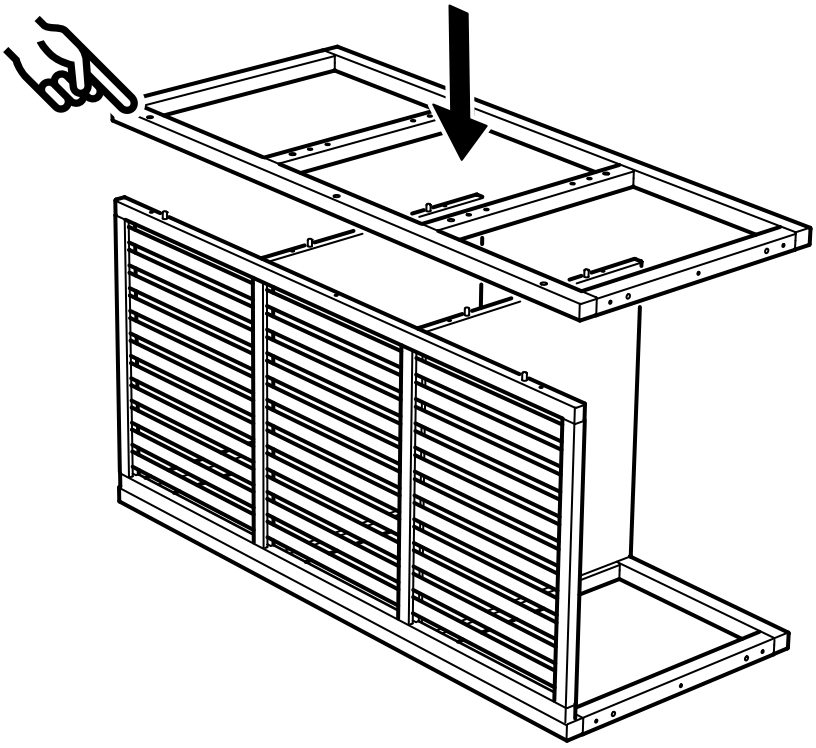

6

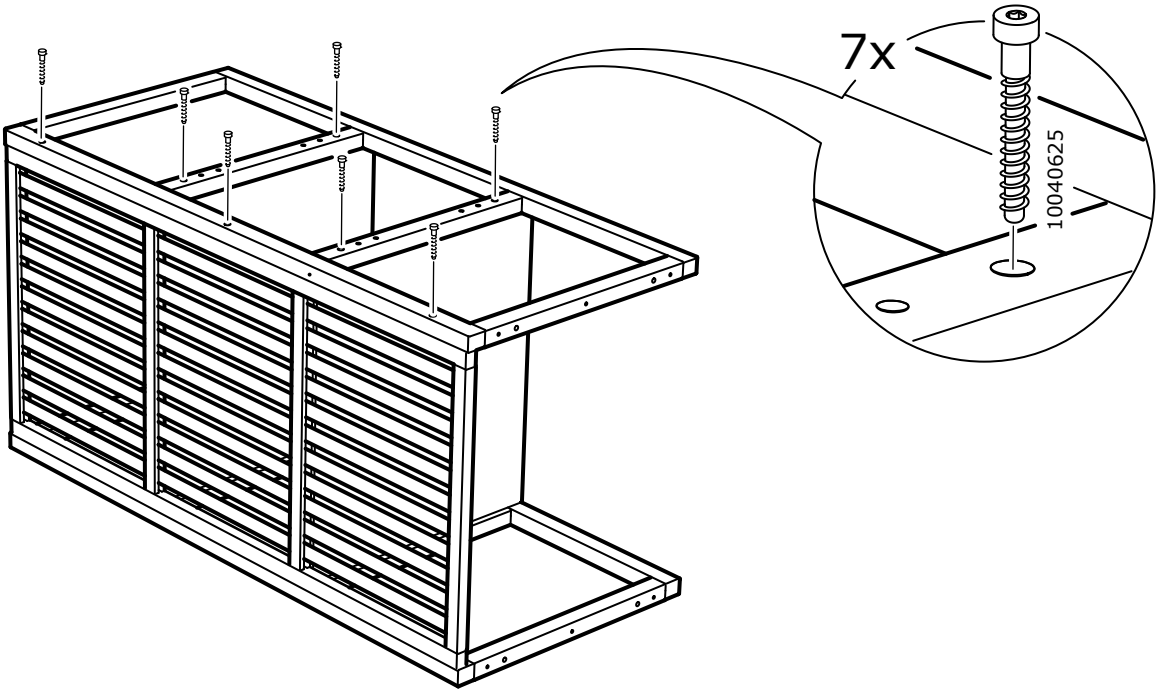

7

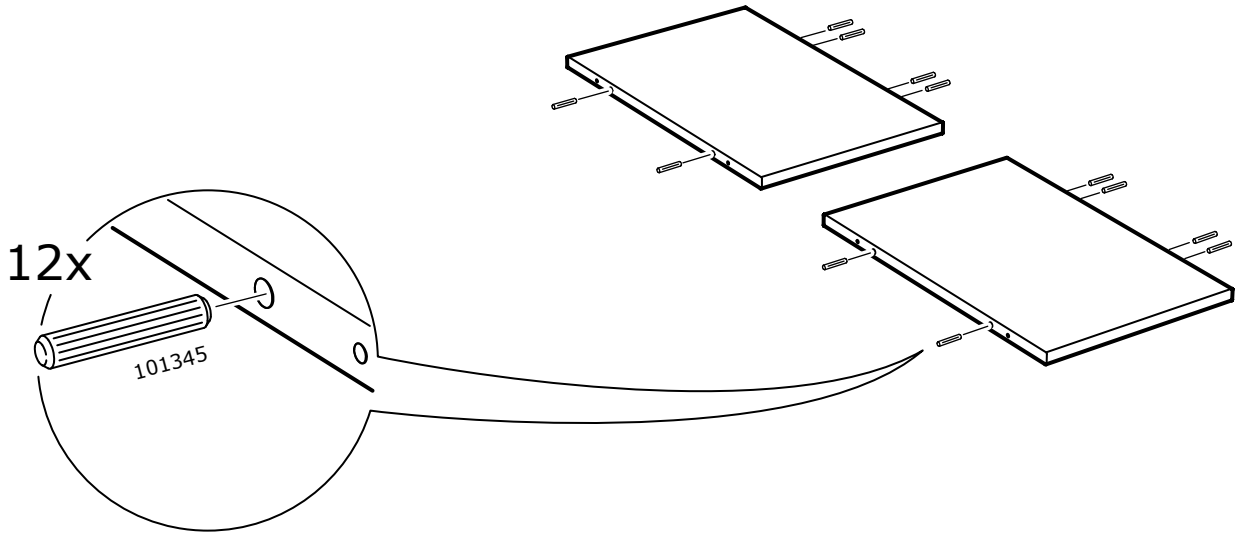

8

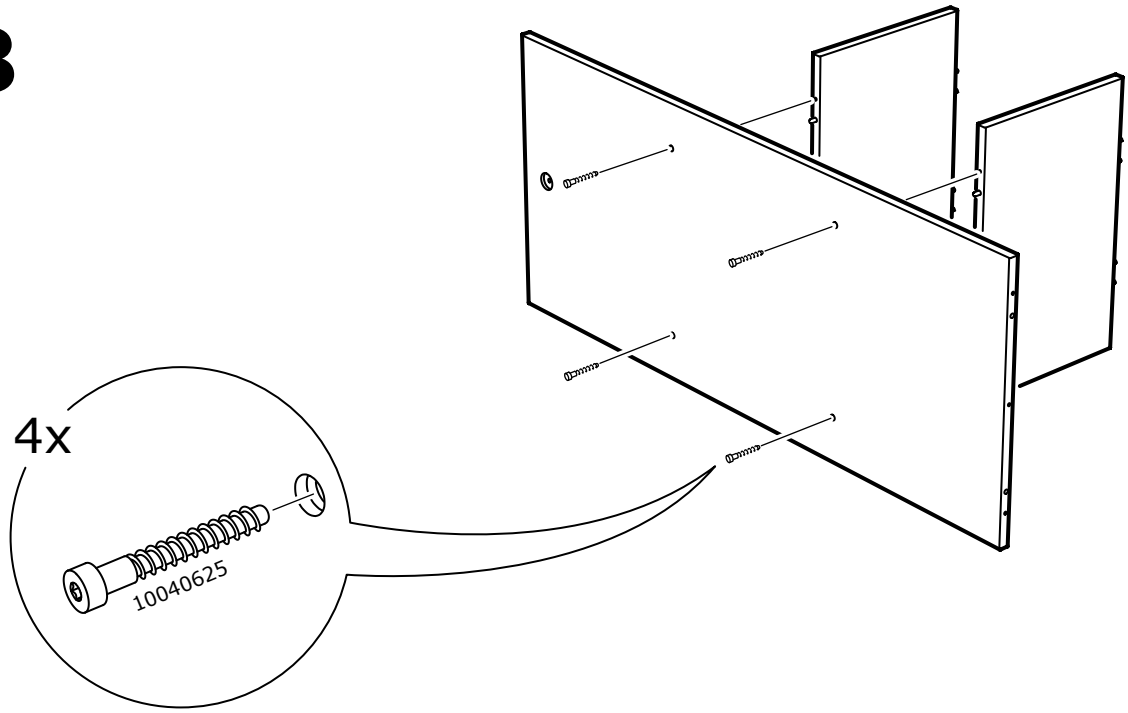

9

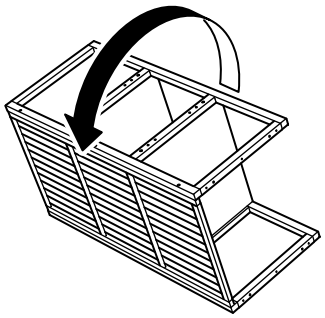

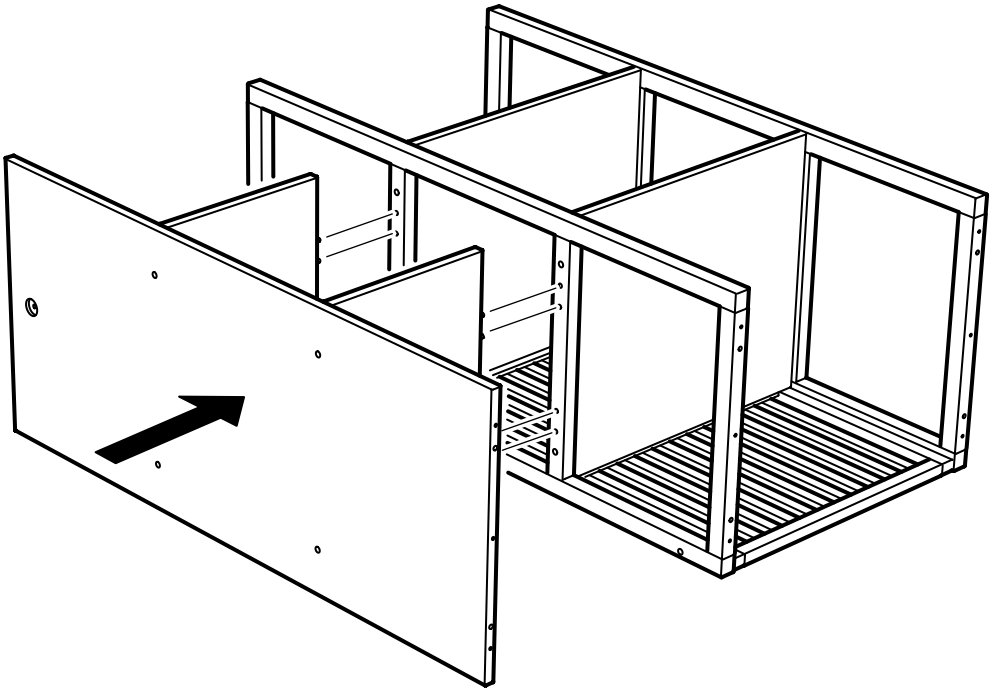

10

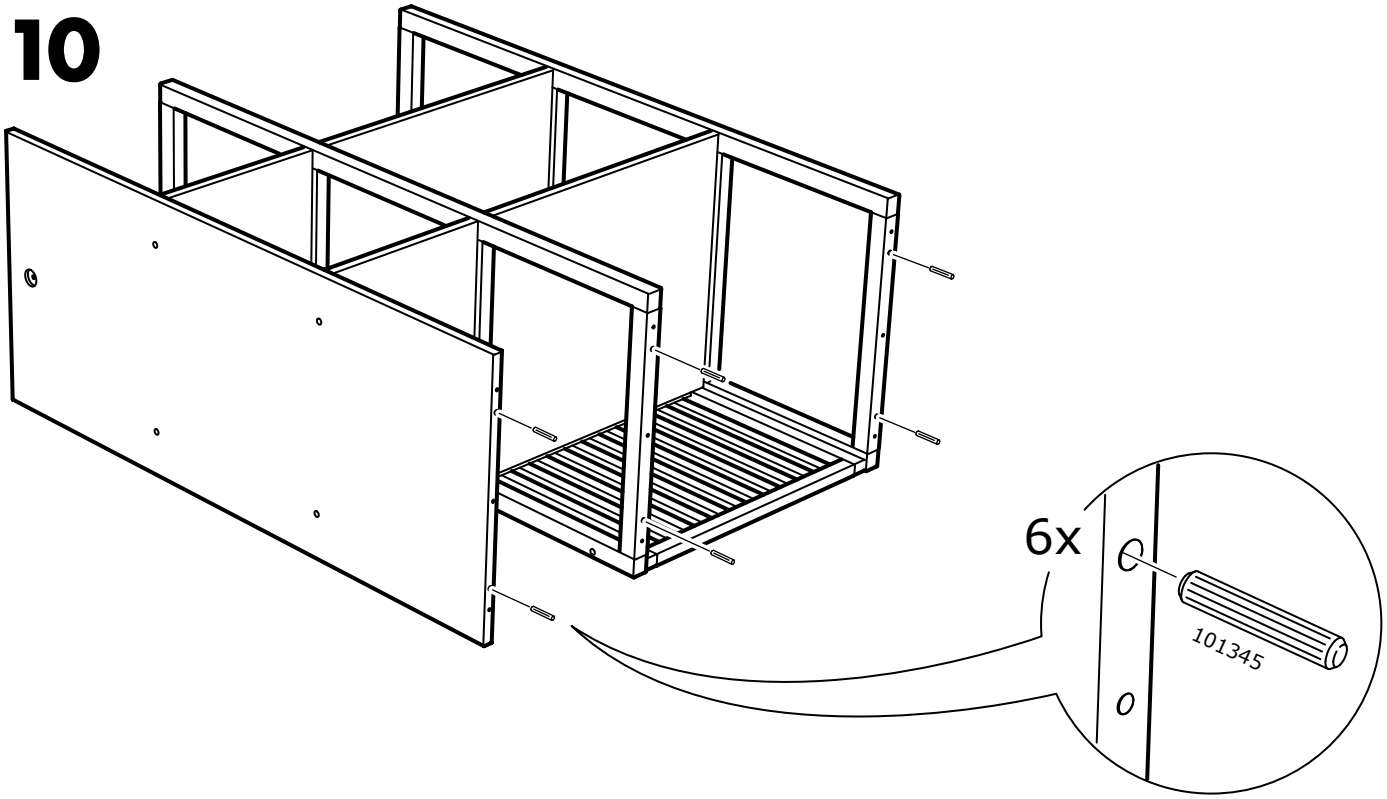

11

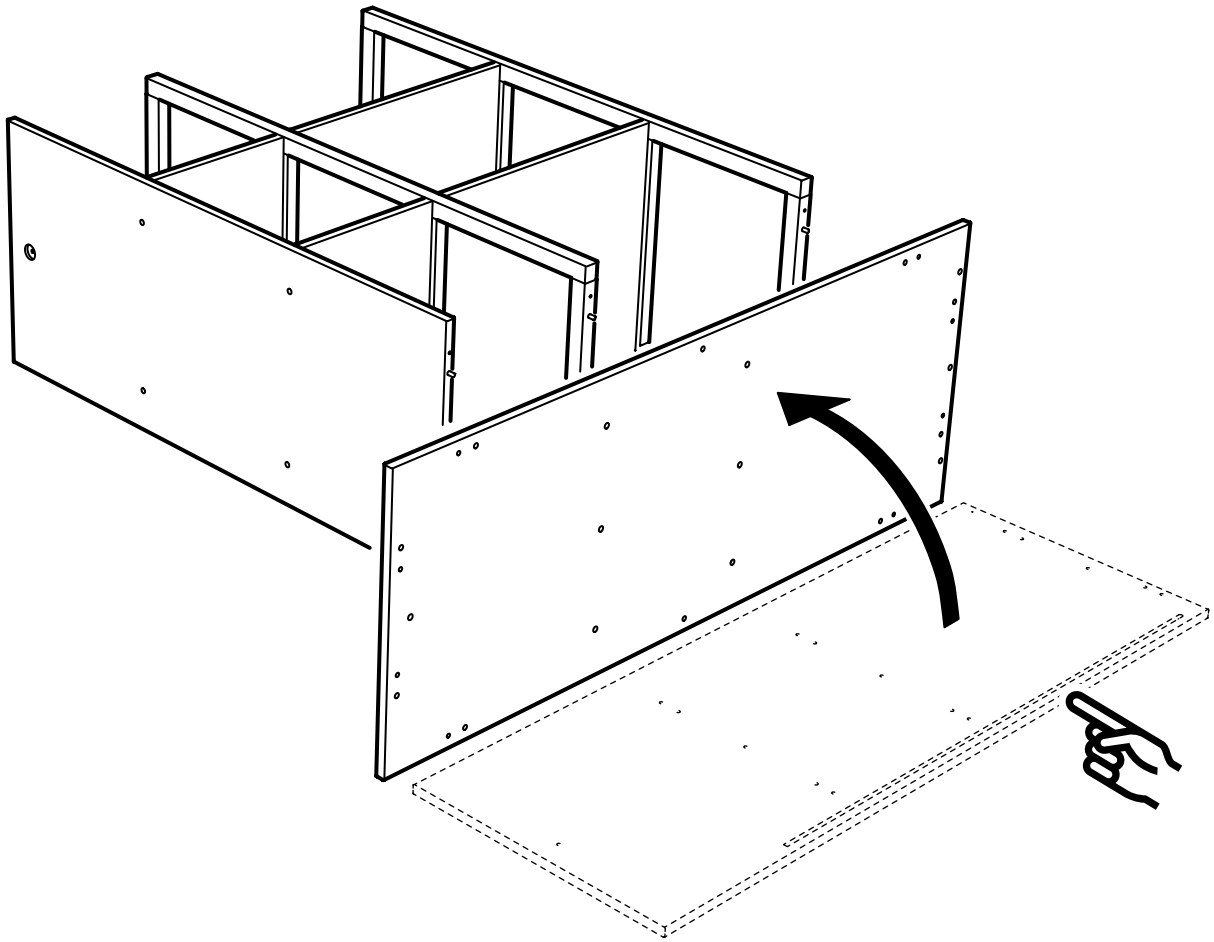

12

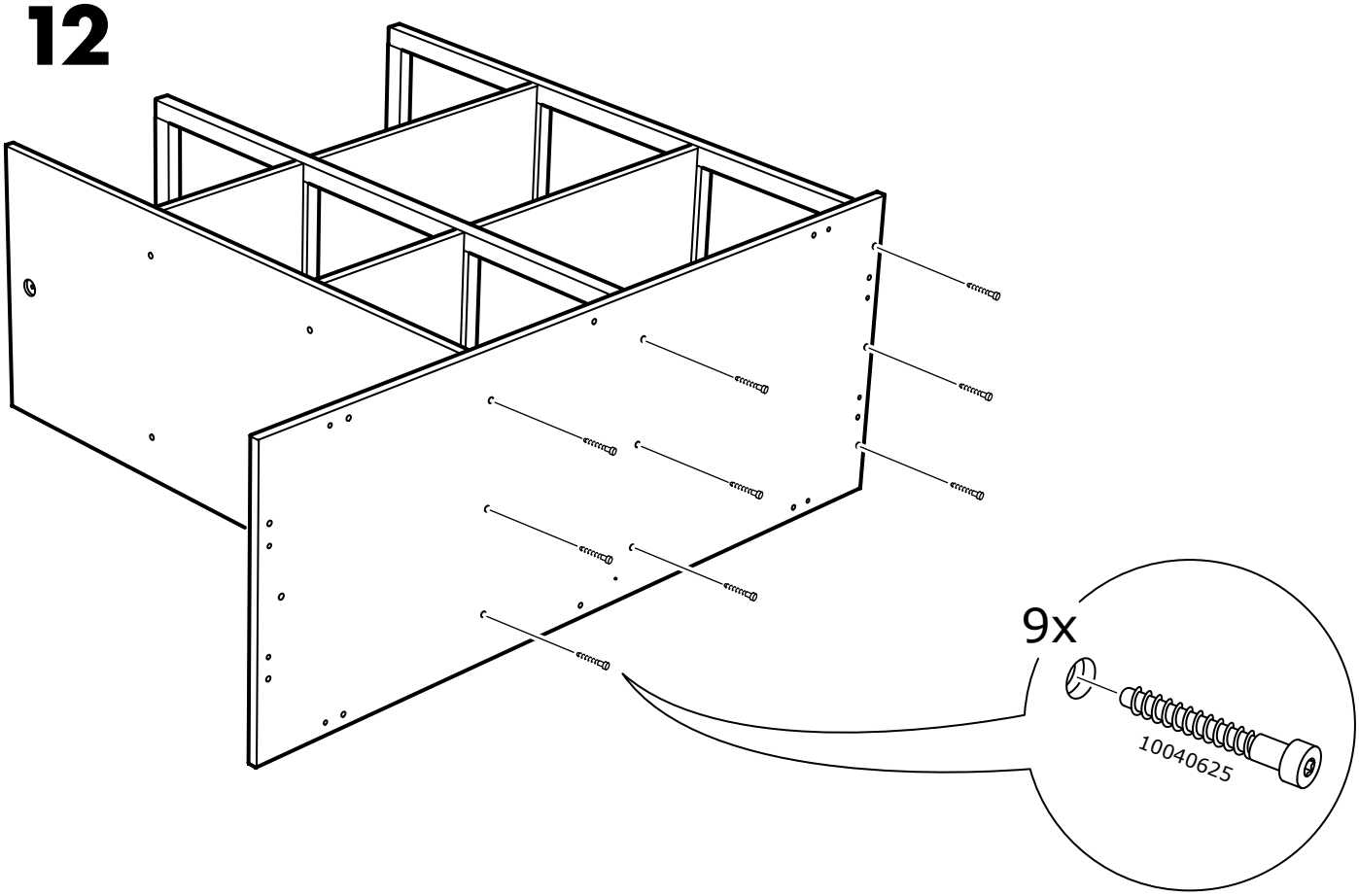

13

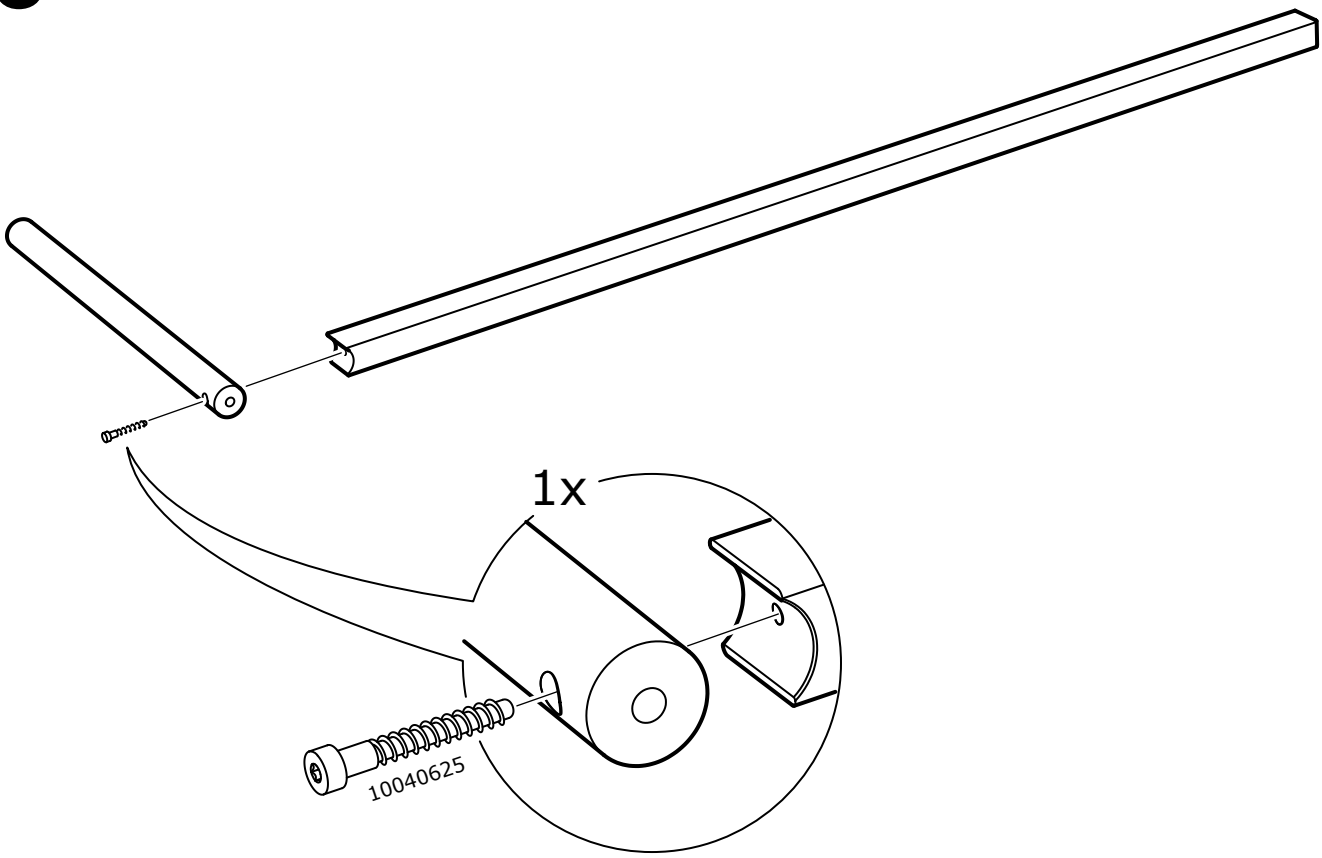

14

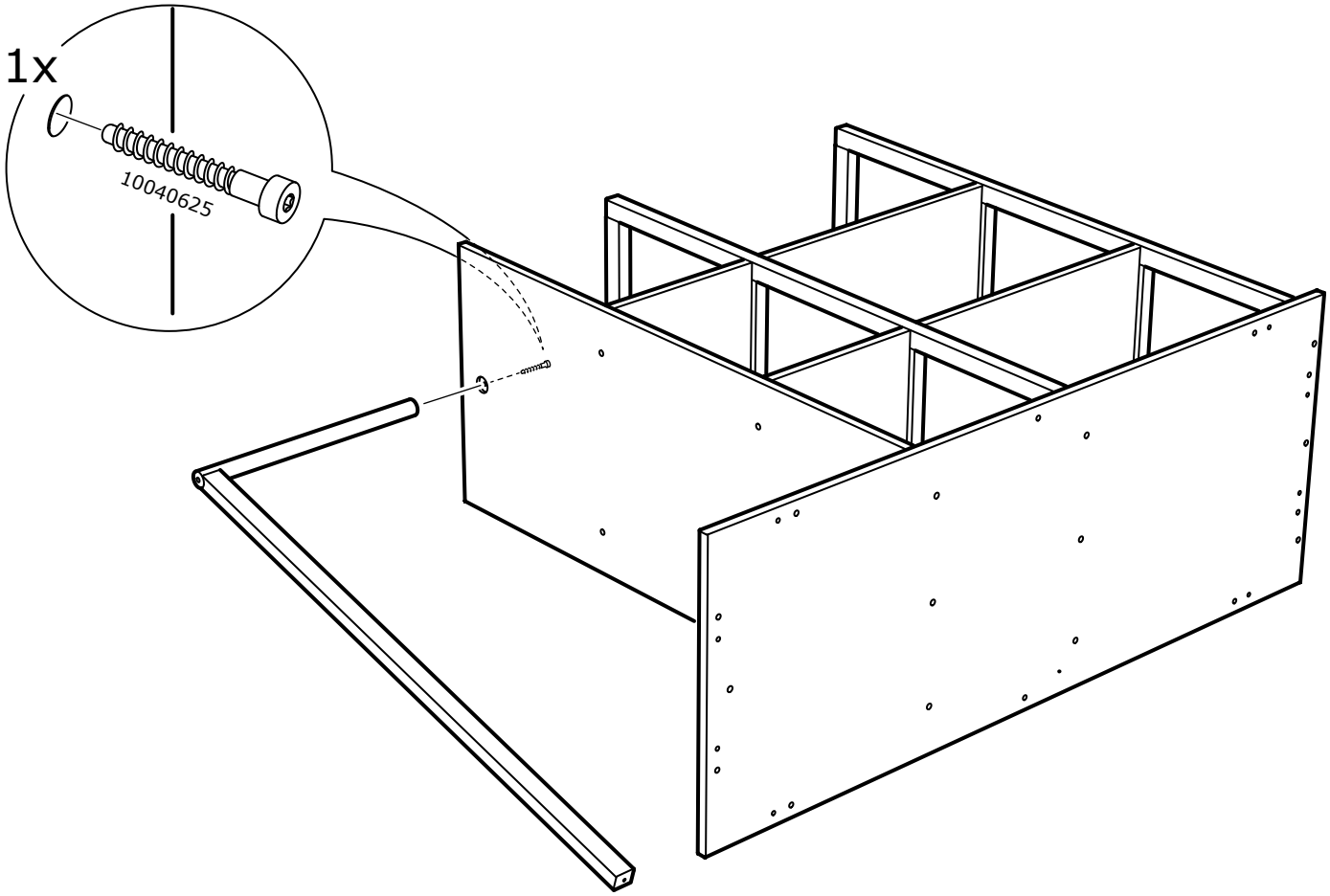

15

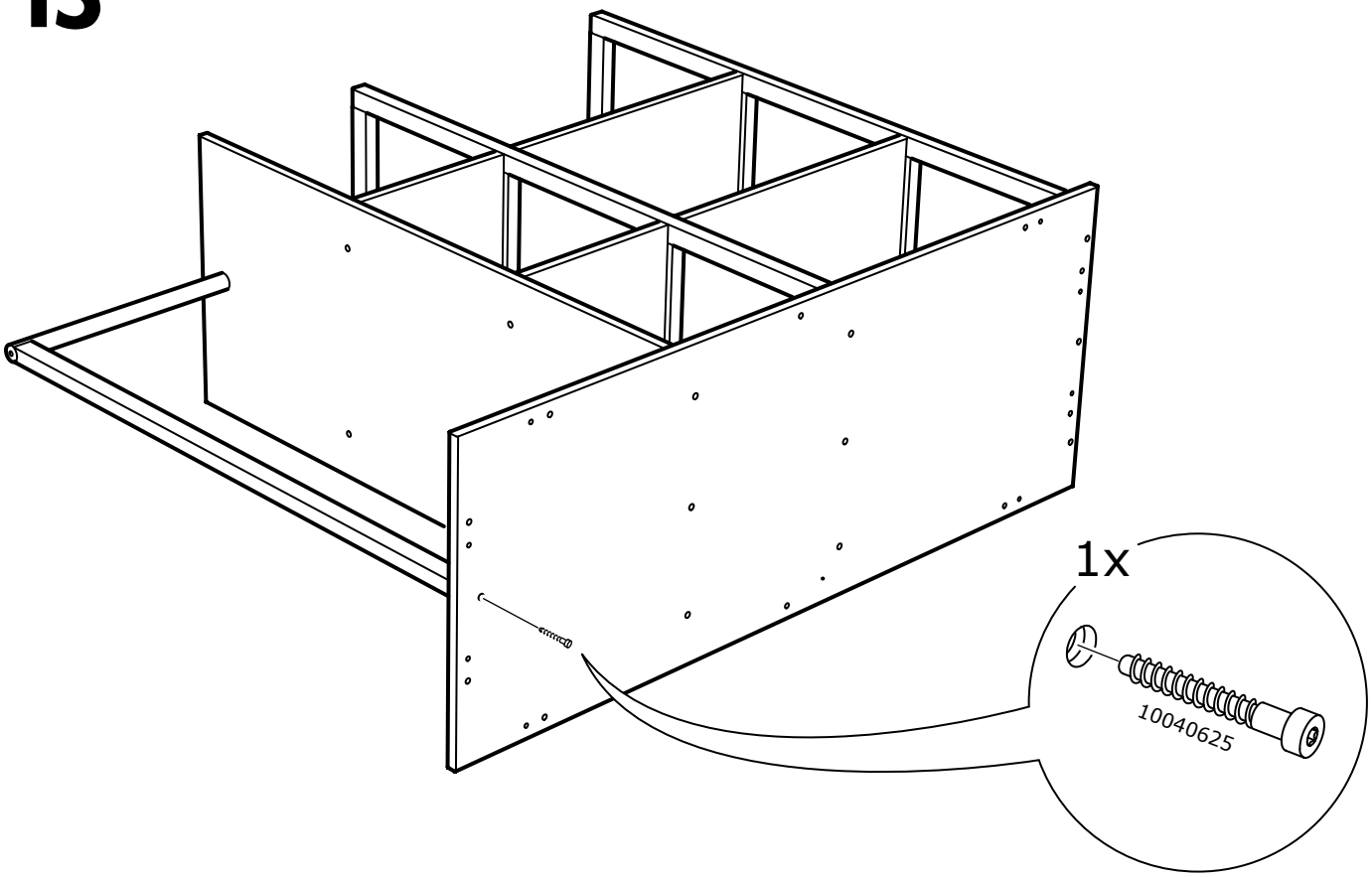

16

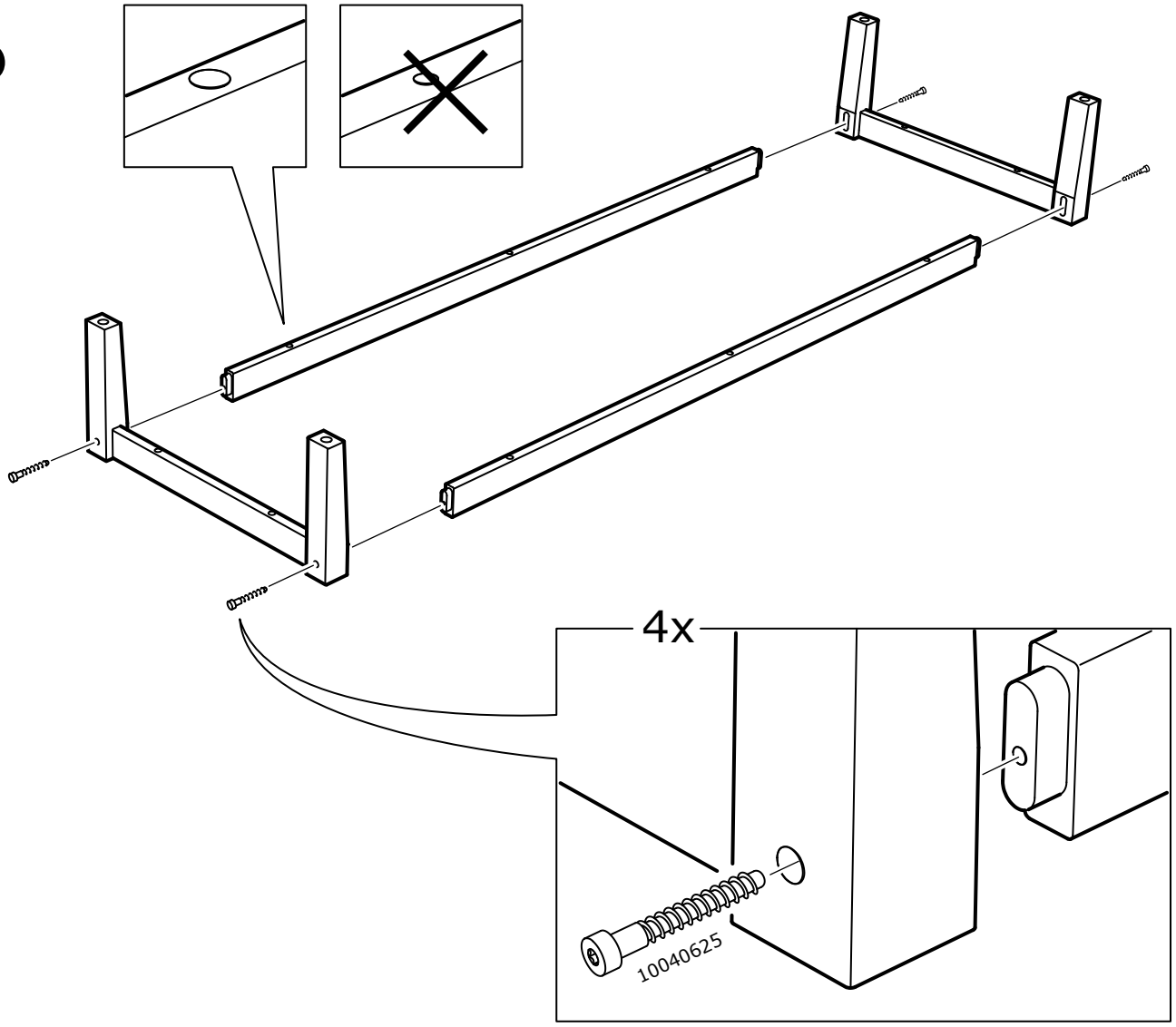

17

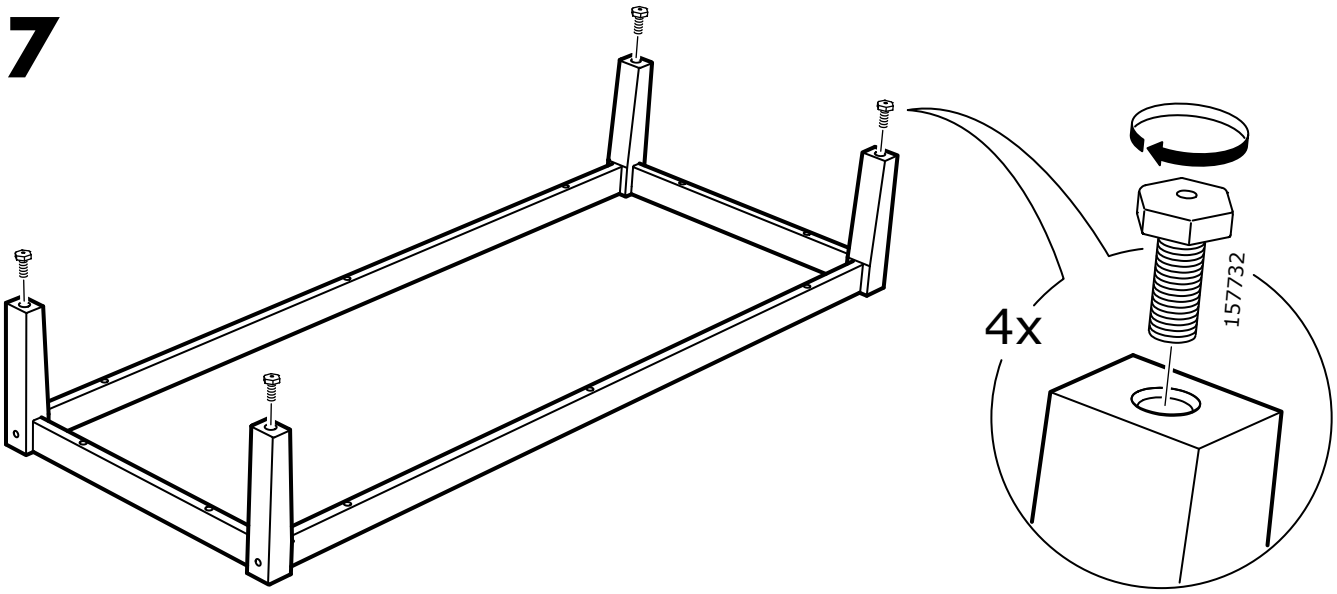

18

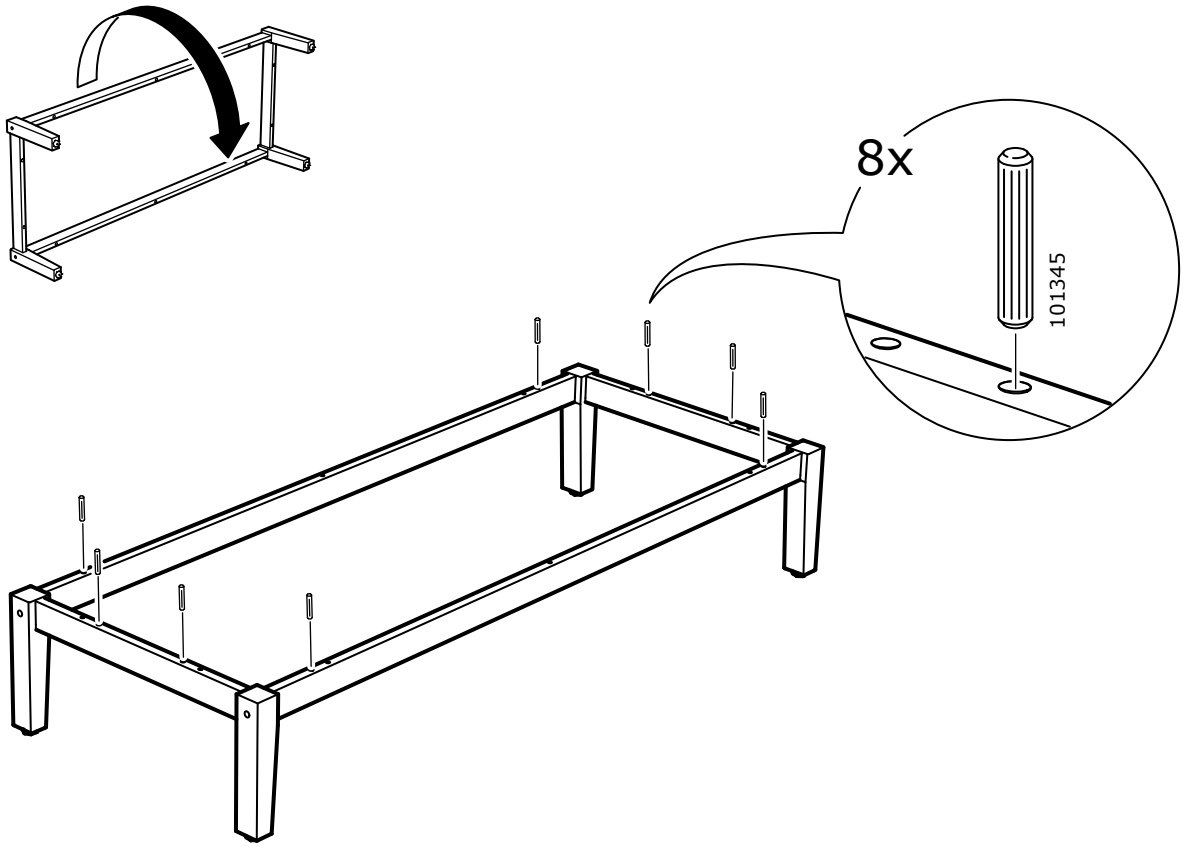

19

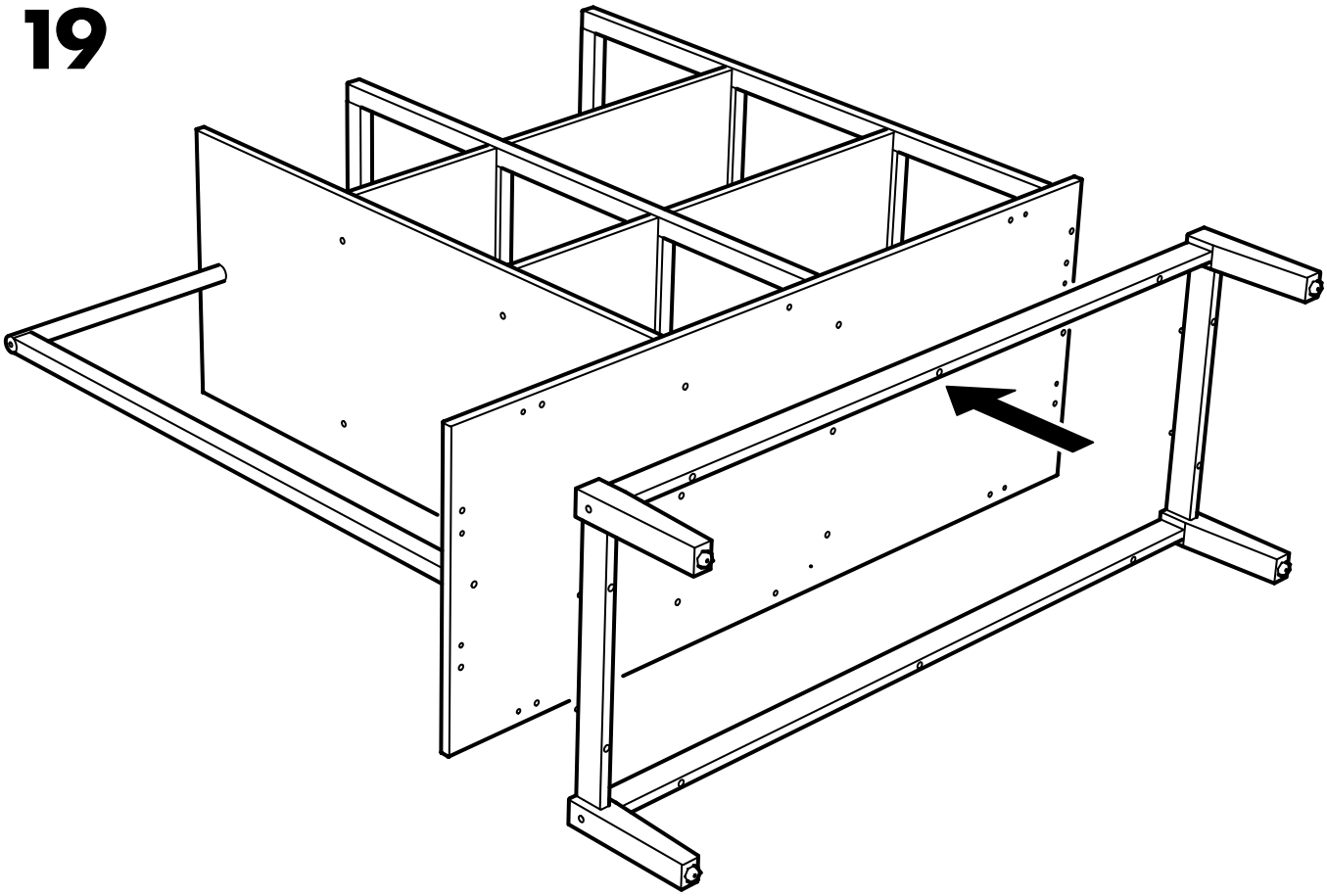

20

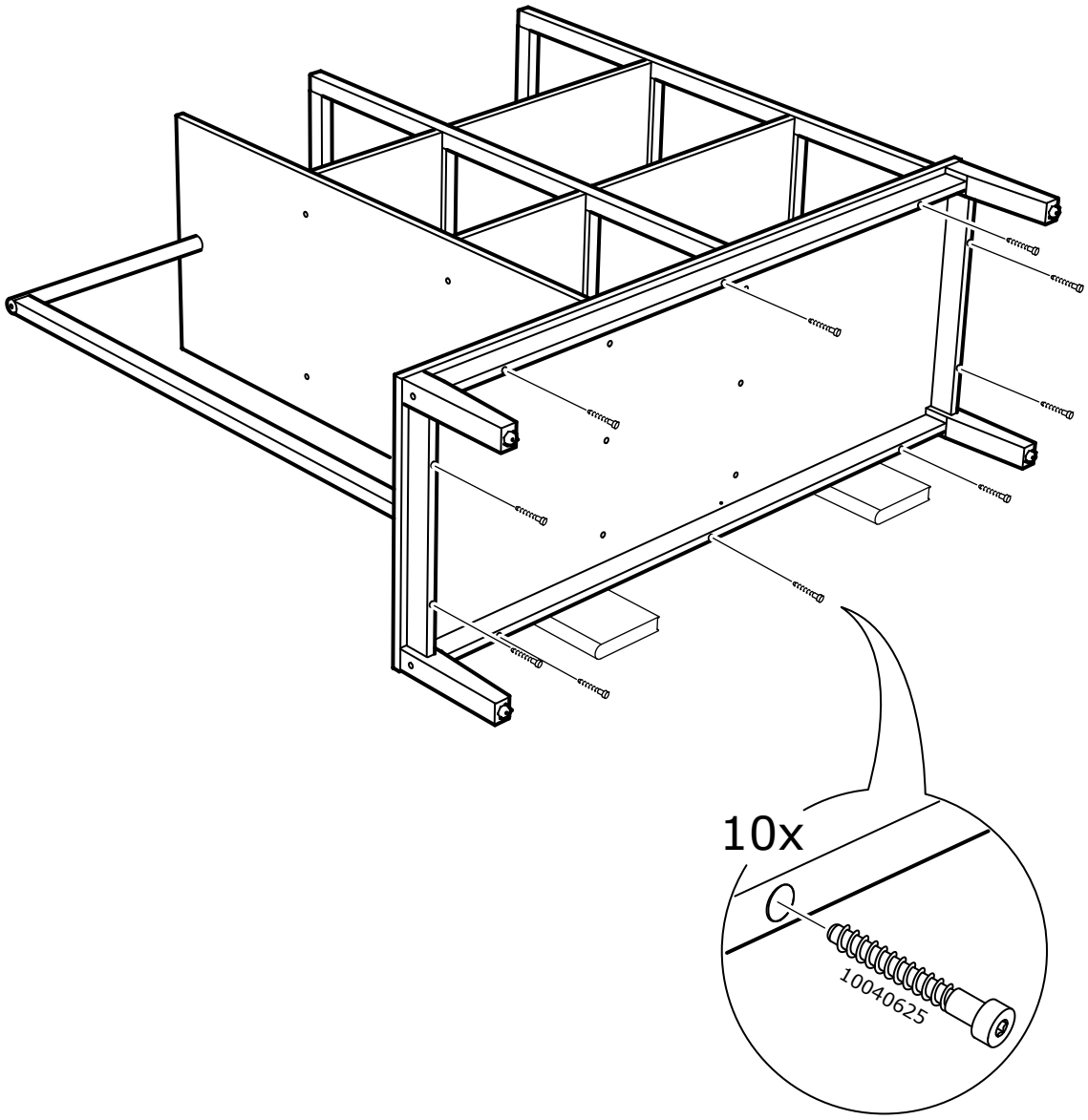

21

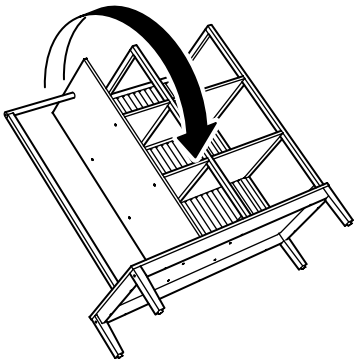

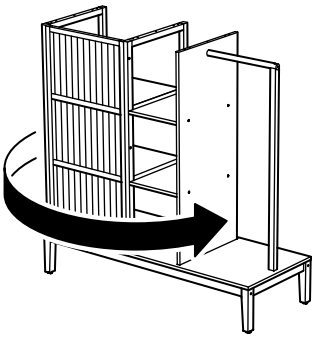

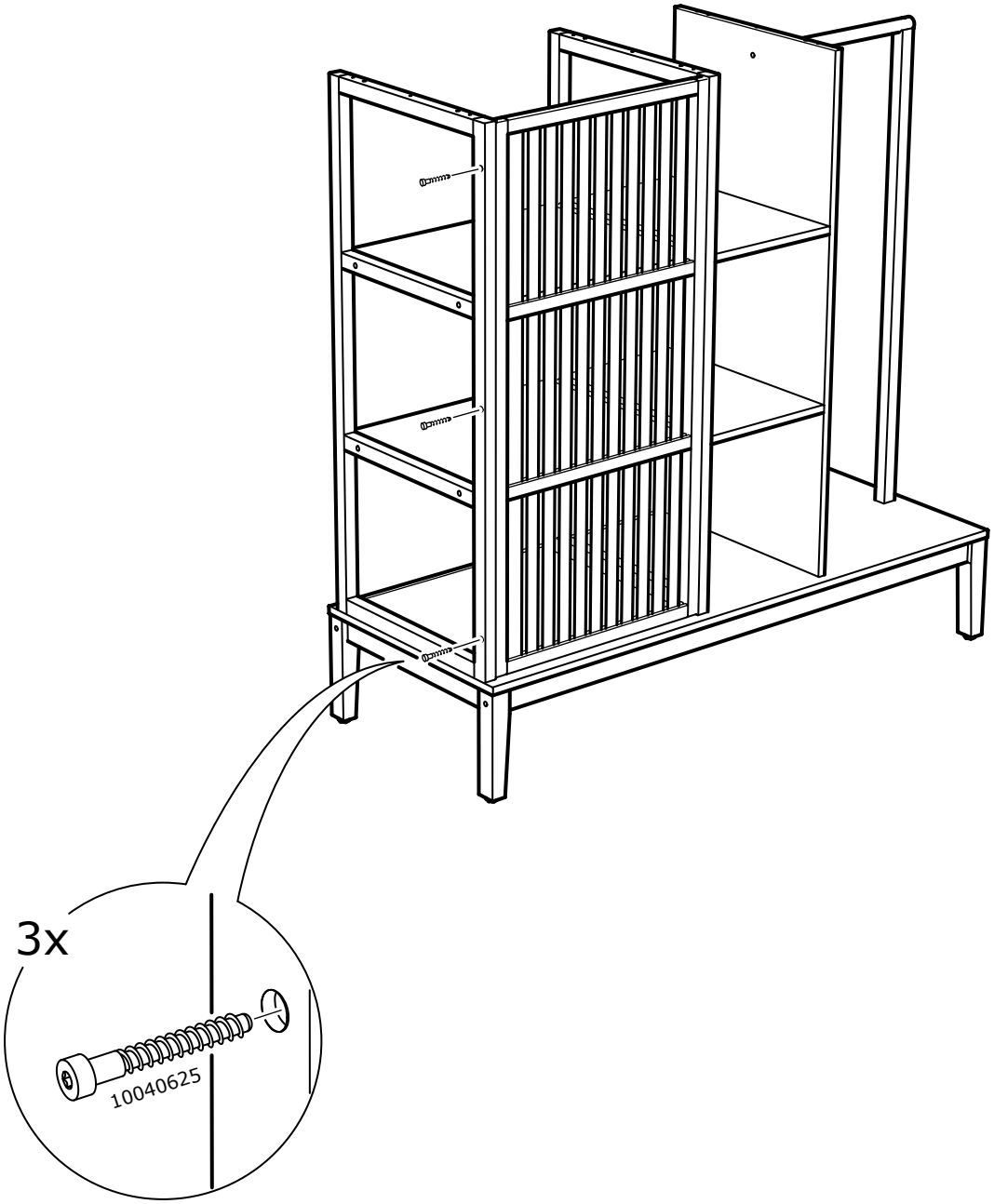

22

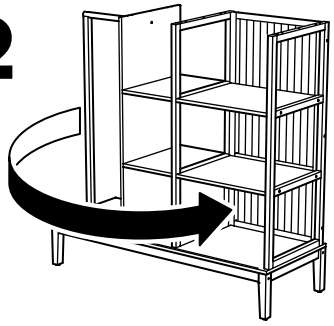

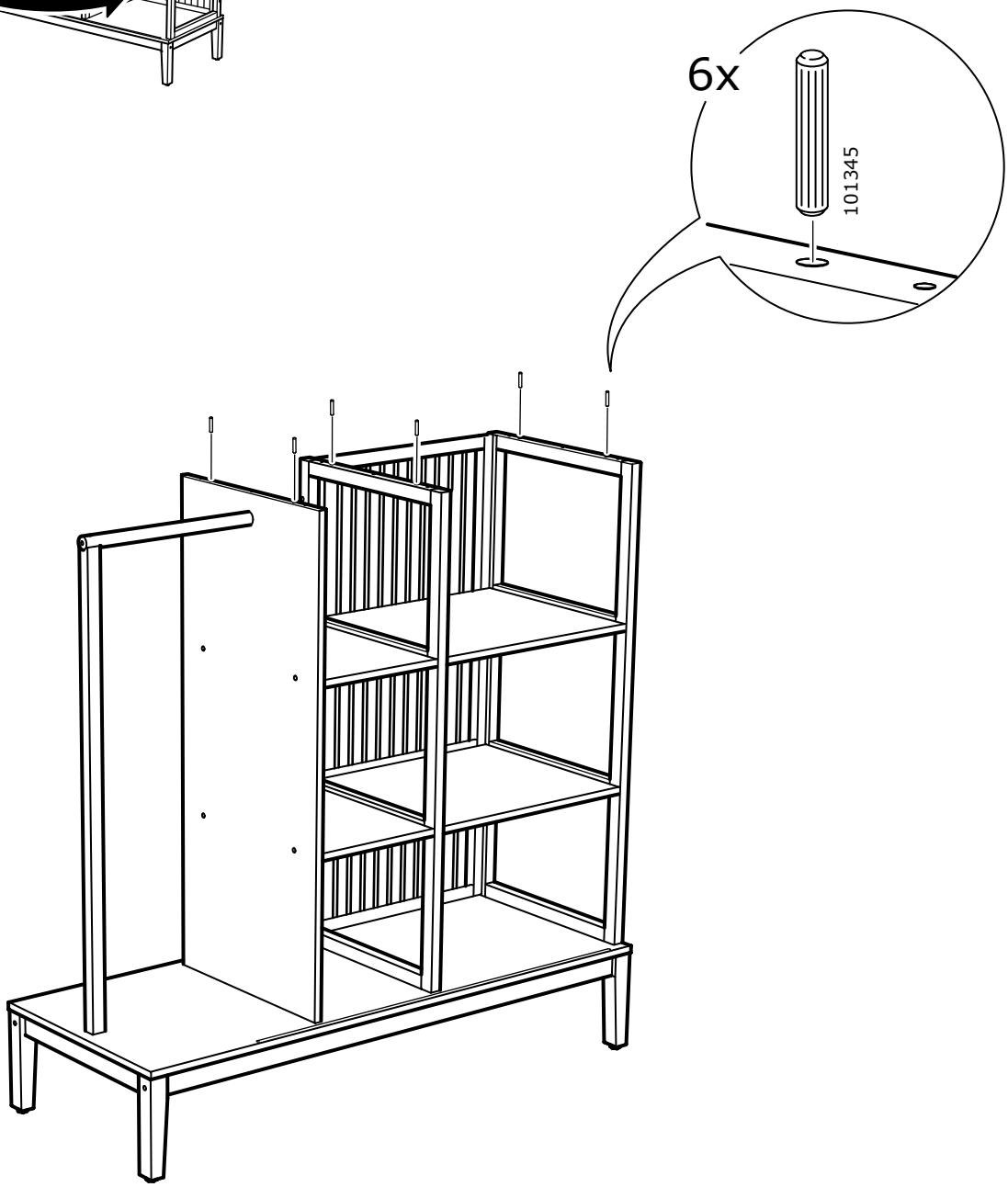

23

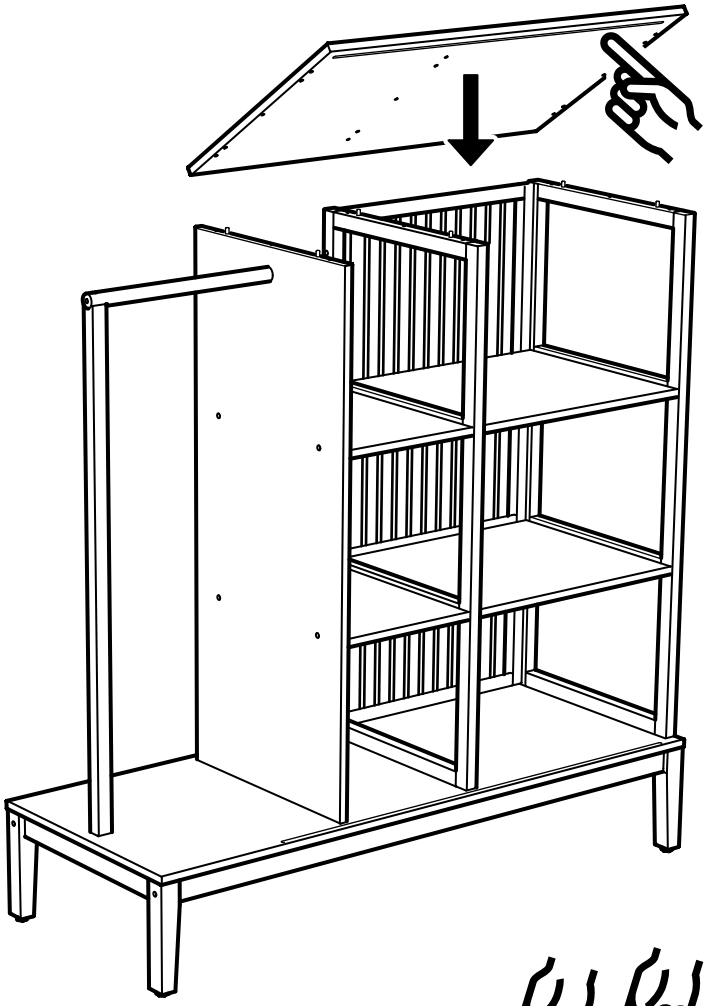

24

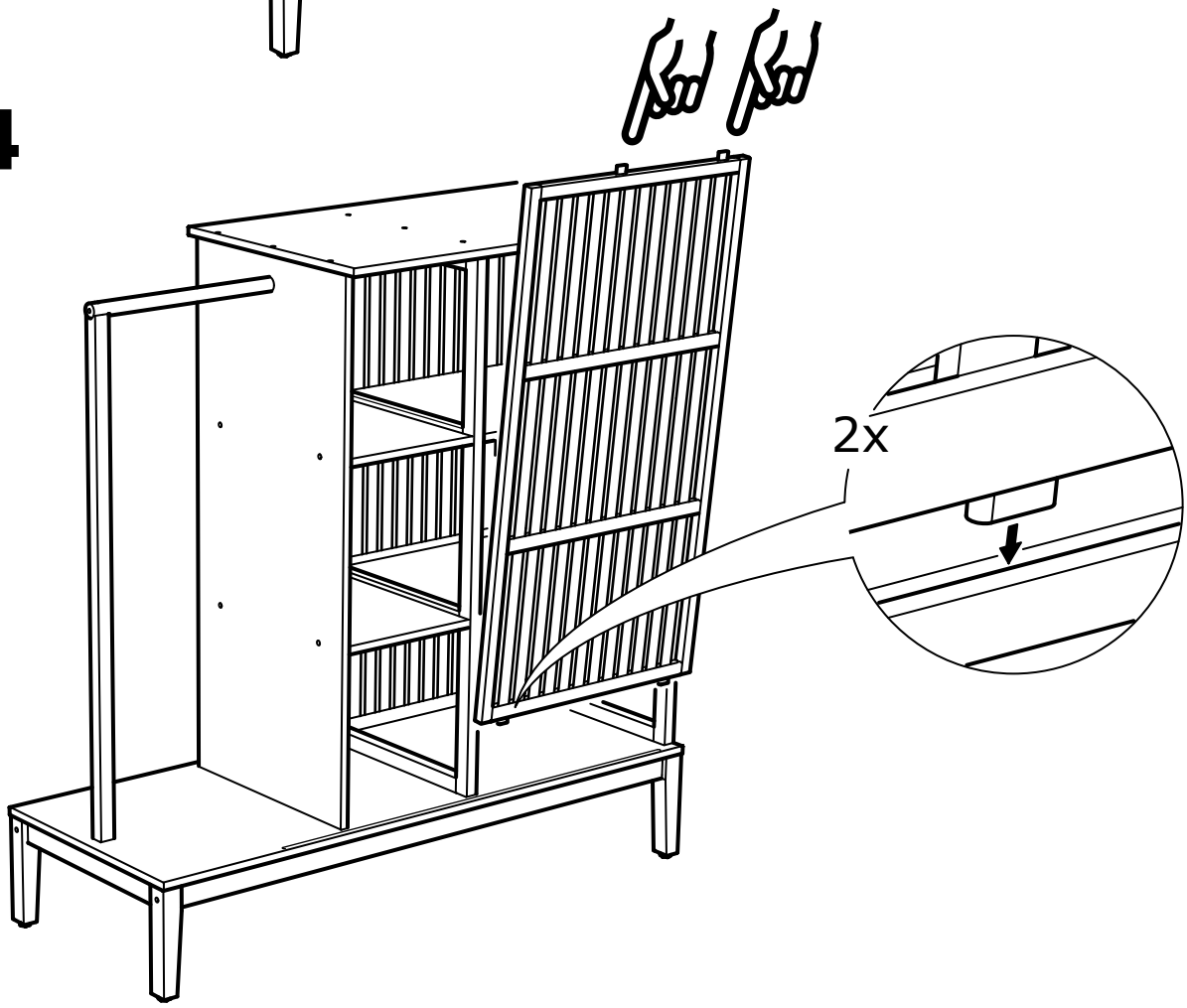

25

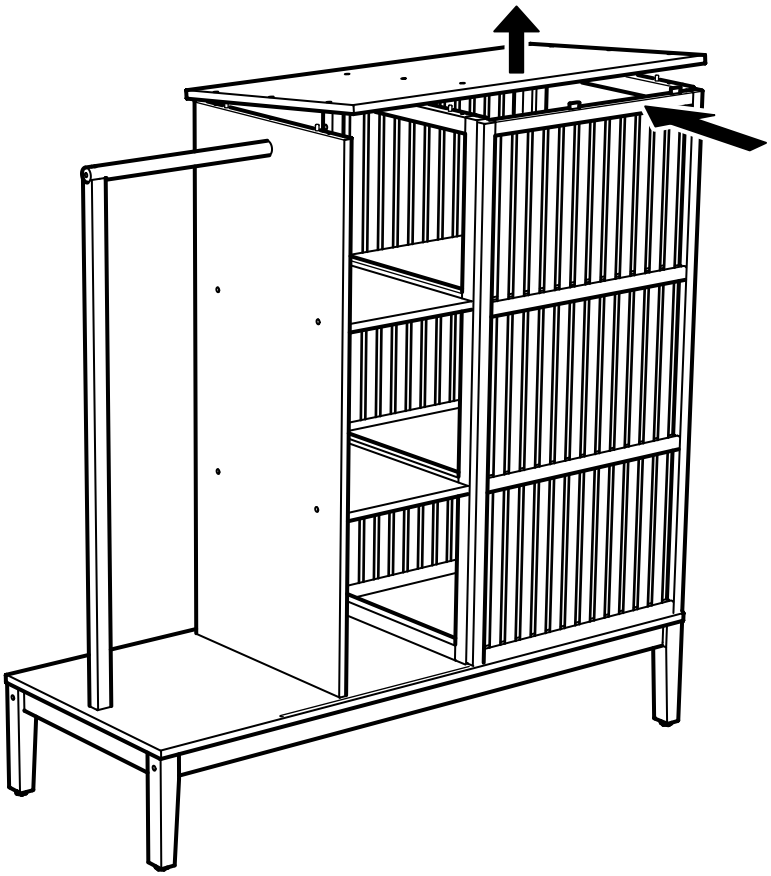

26

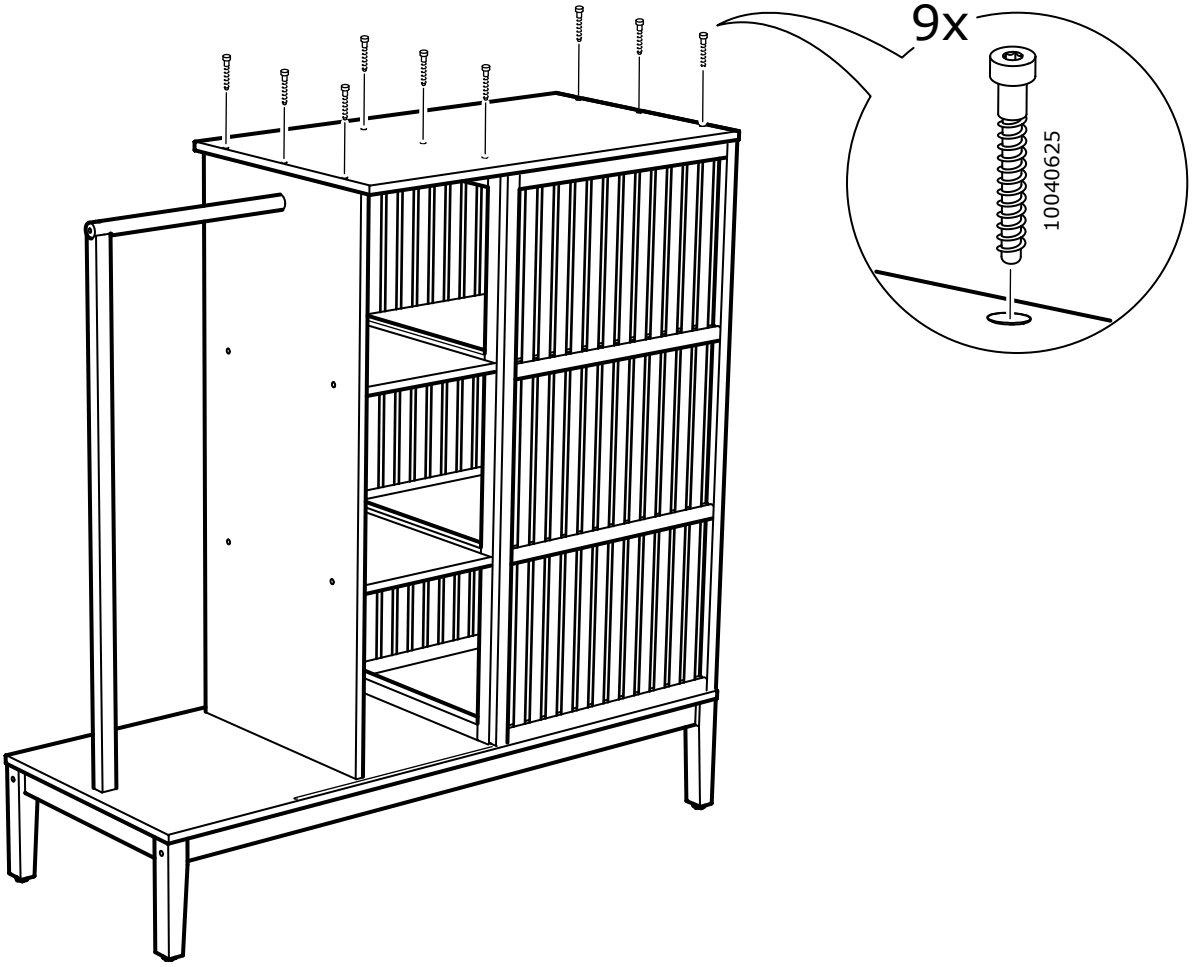

27

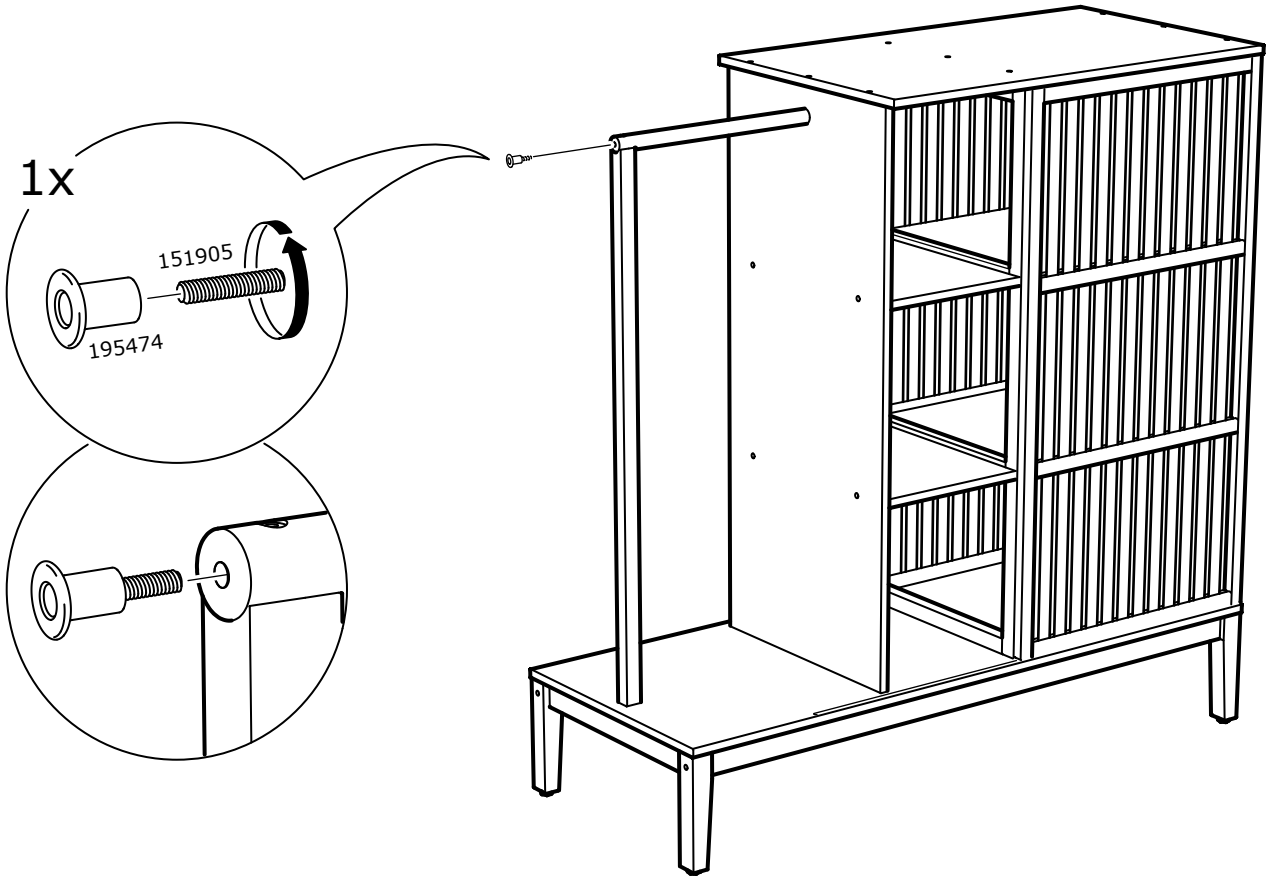

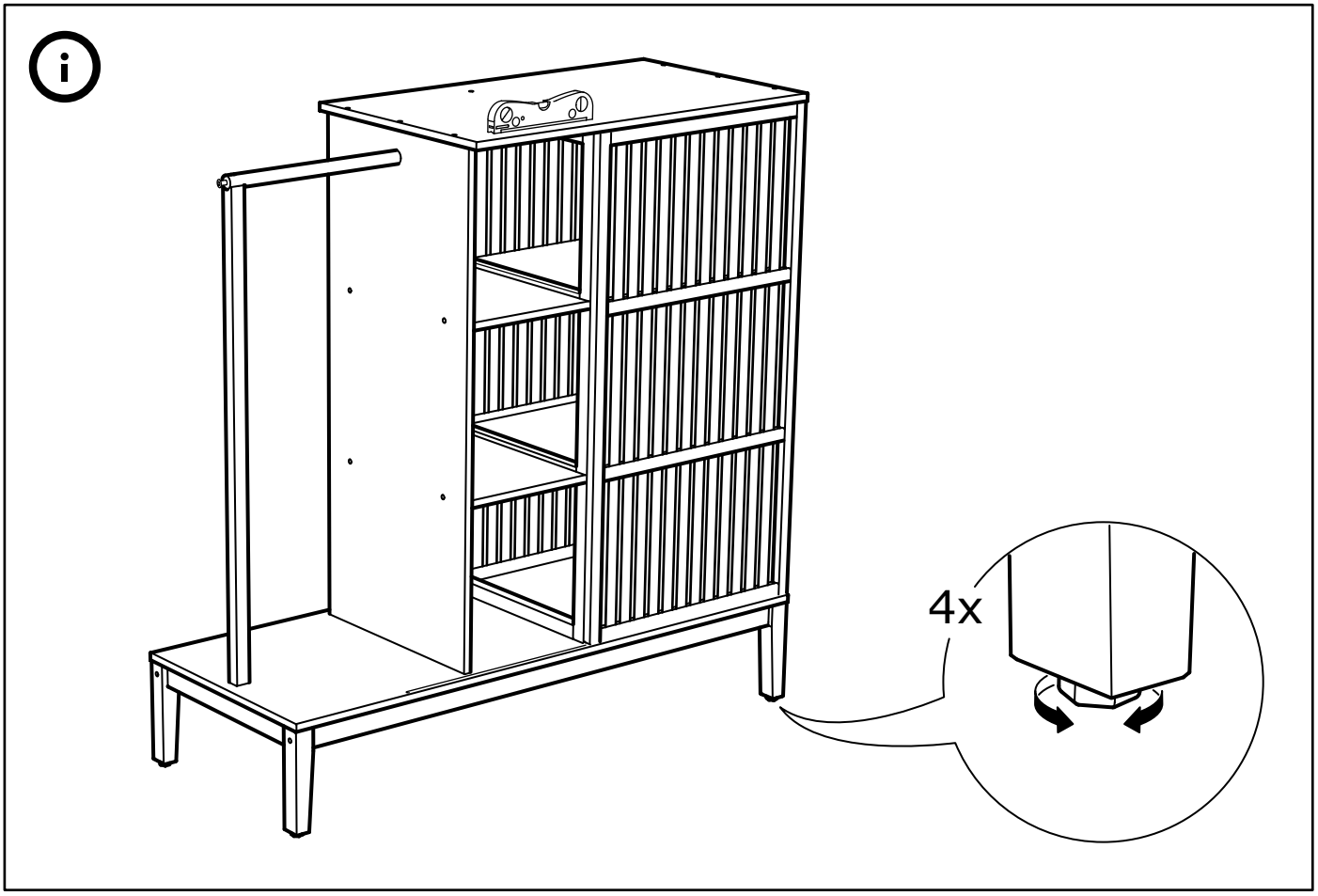
4x

© Inter IKEA Systems B.V. 2019