ASKHOLMEN

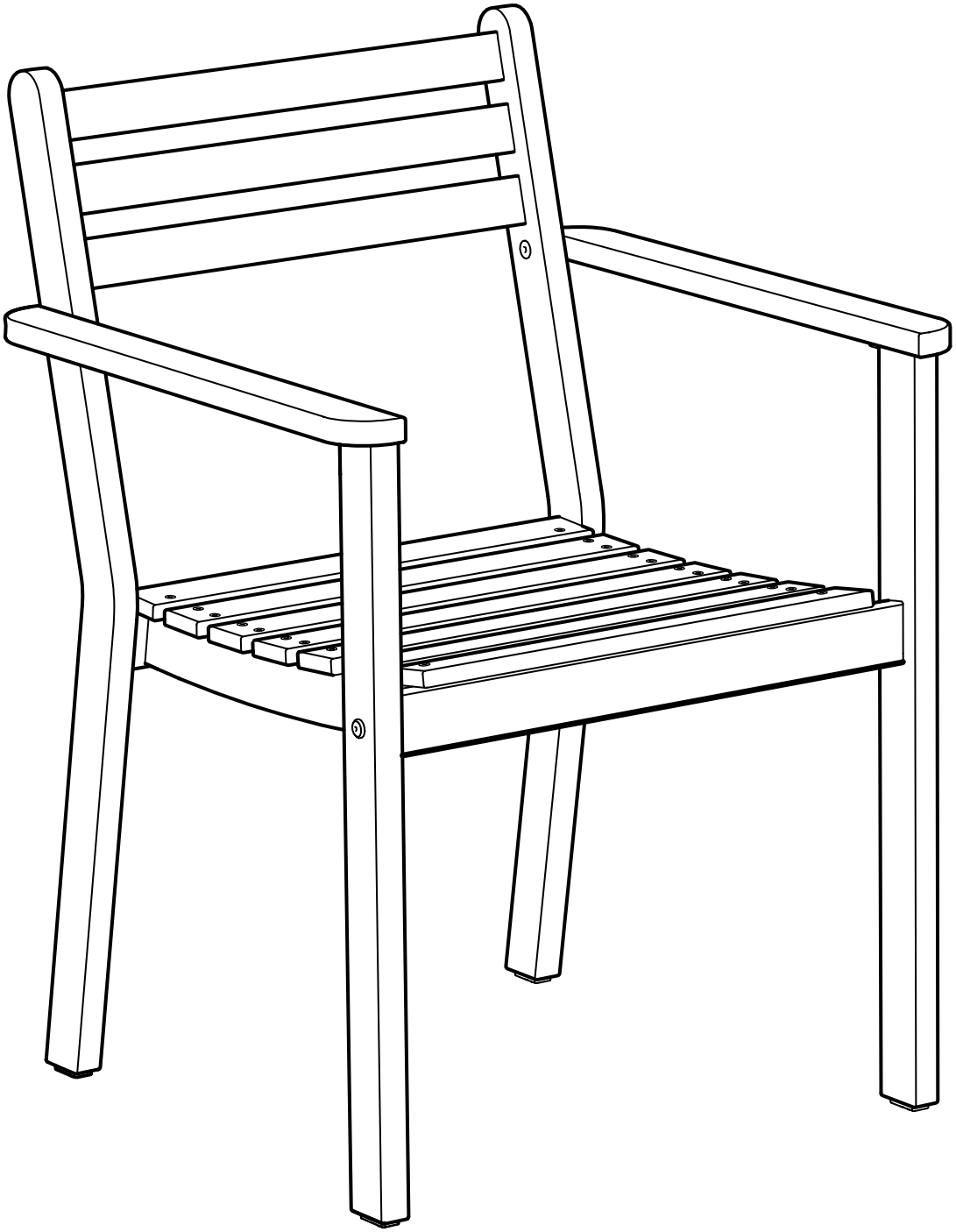

Design and Quality
IKEA of Sweden

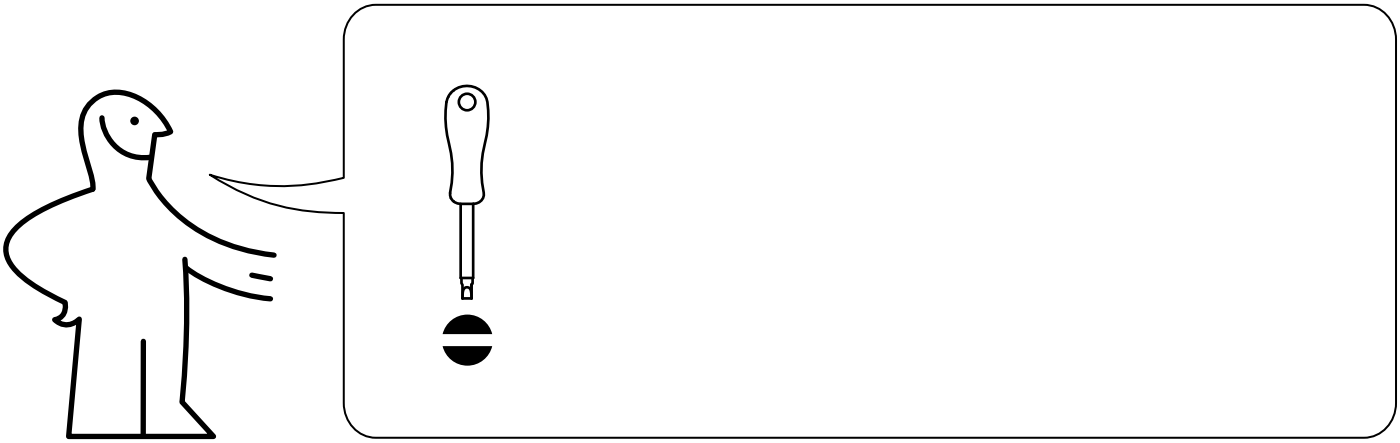

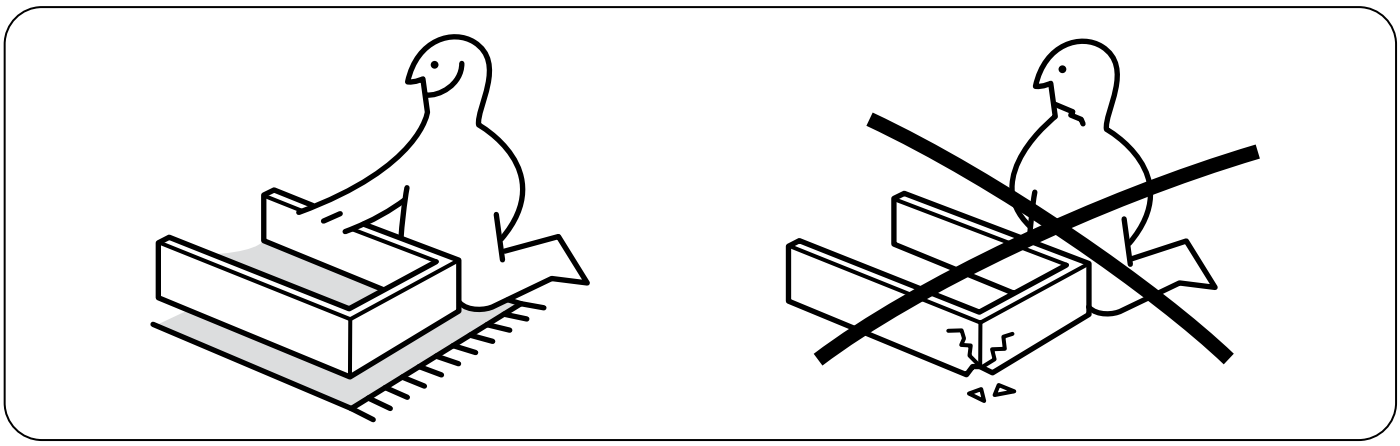

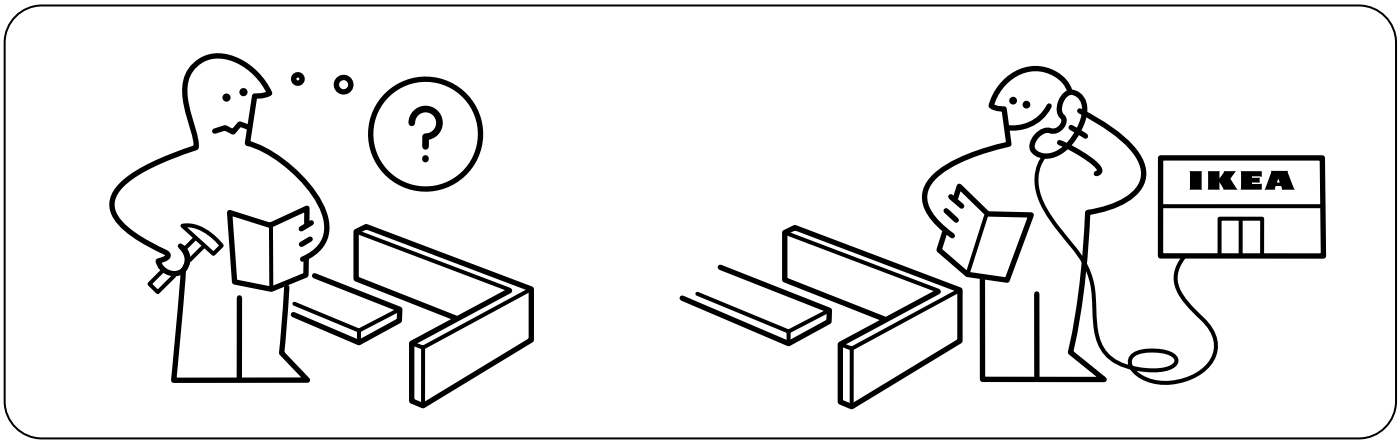
IKEA

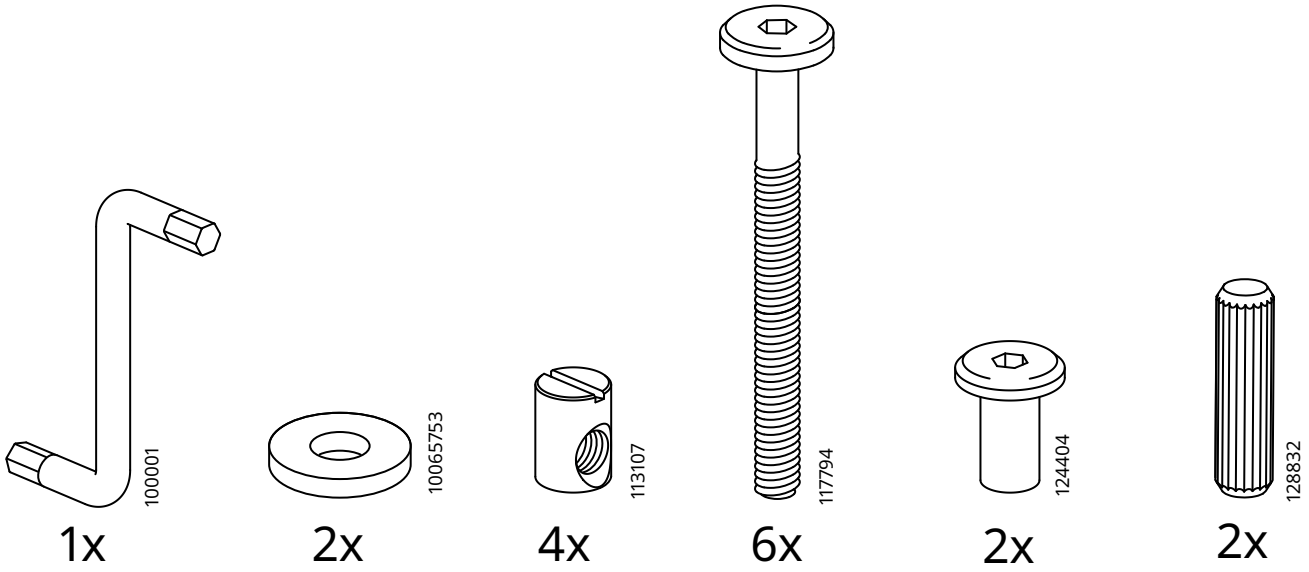
100001
1x
10065753
2x
113107
4x
117794
6x
124404
2x
128832
2x

1

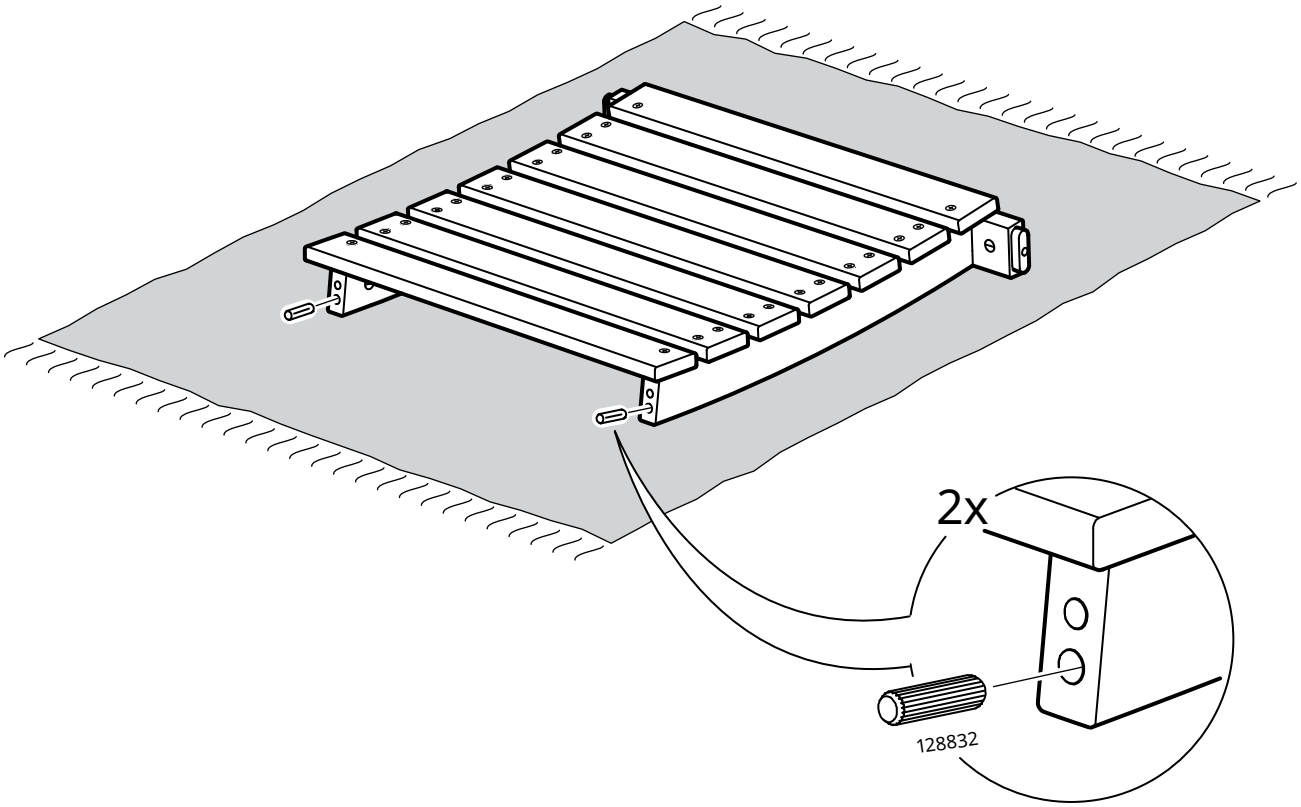
2x
128832

2

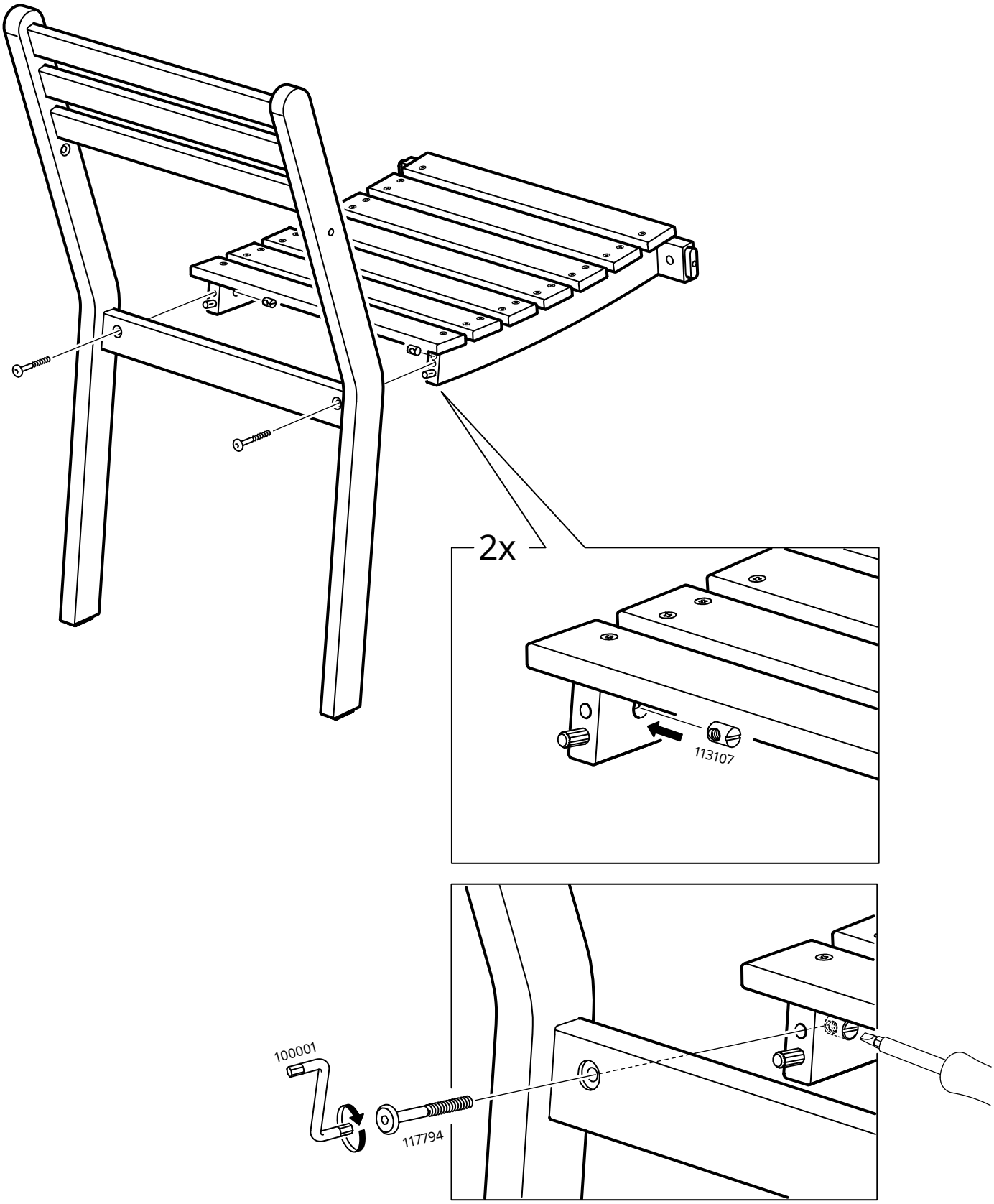

3

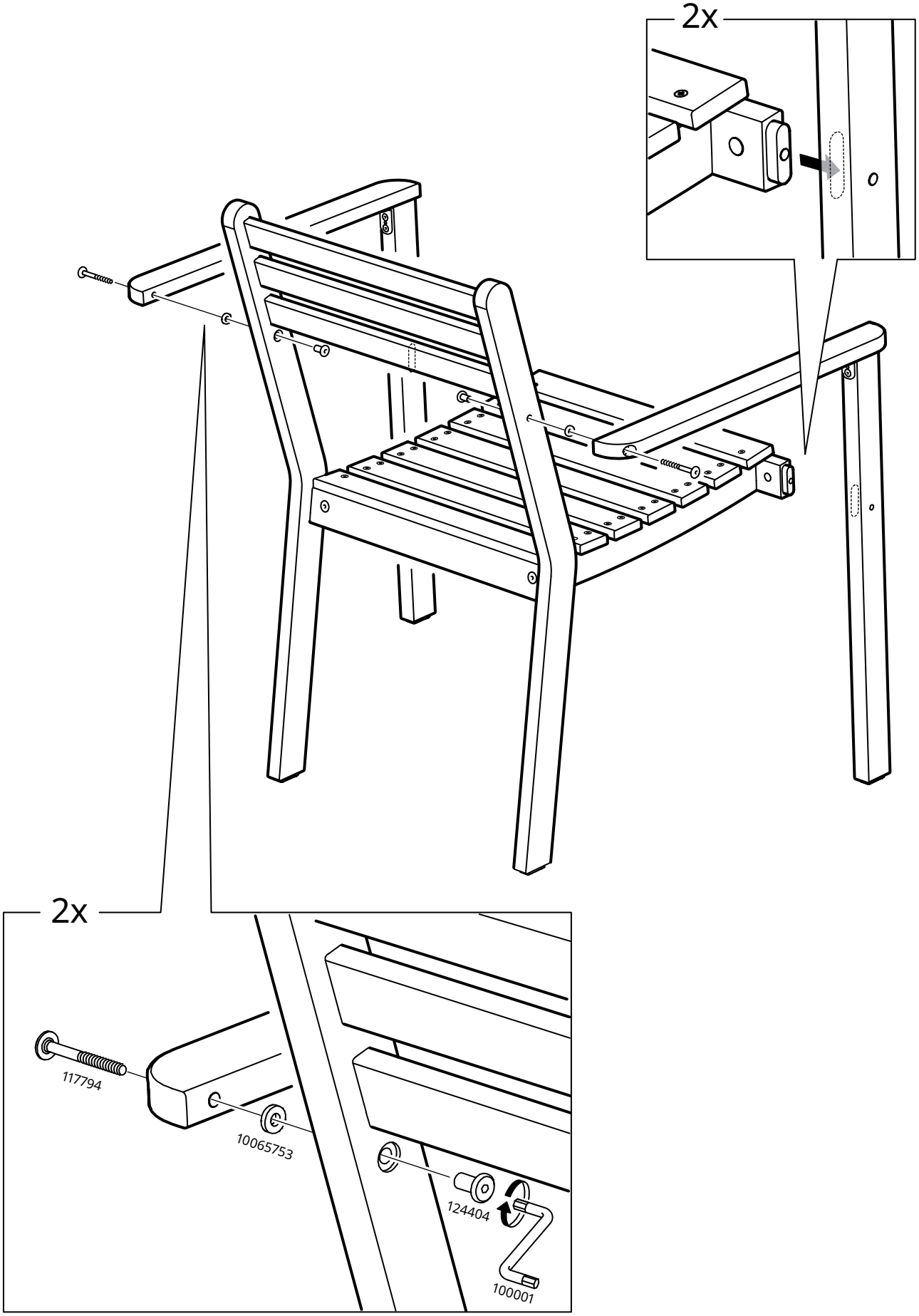

4

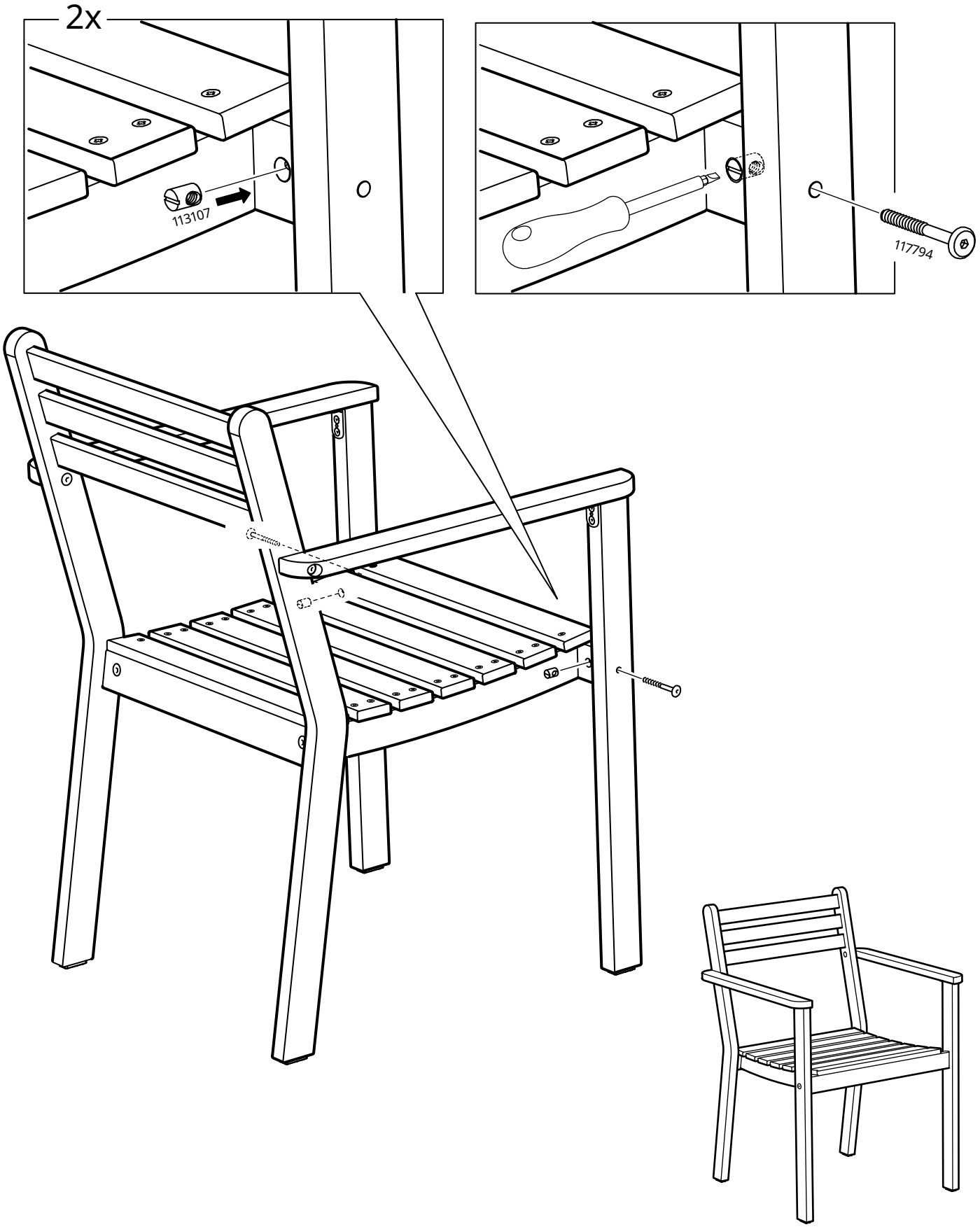

© Inter IKEA Systems B.V. 2022
2022-06-22 AA-2352749-1