VINTERFINT

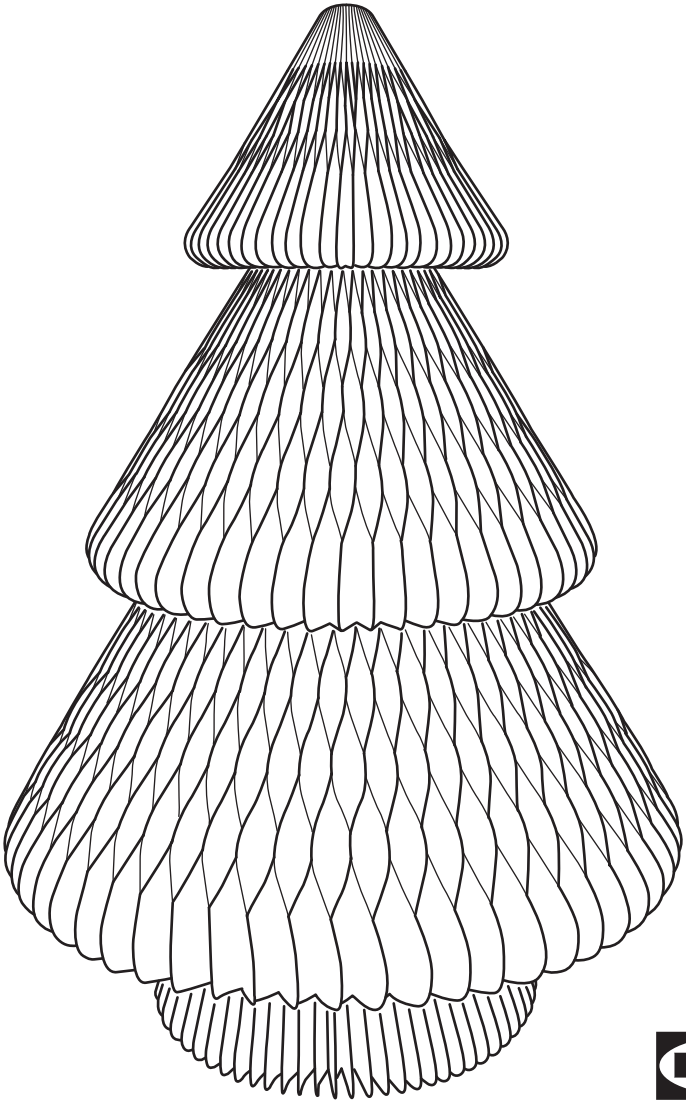

Design and Quality
IKEA of Sweden

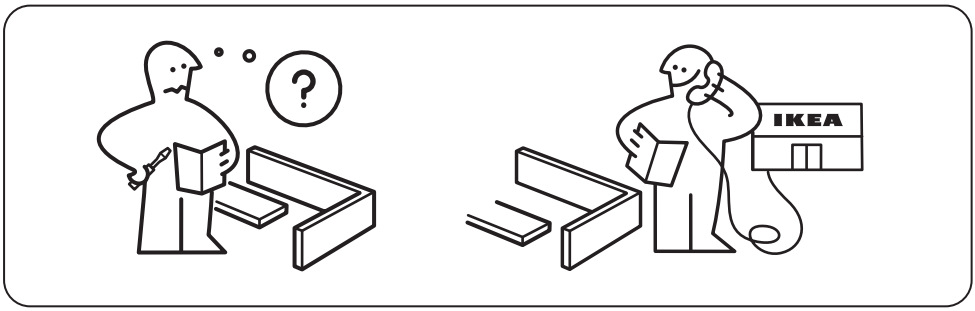
IKEA

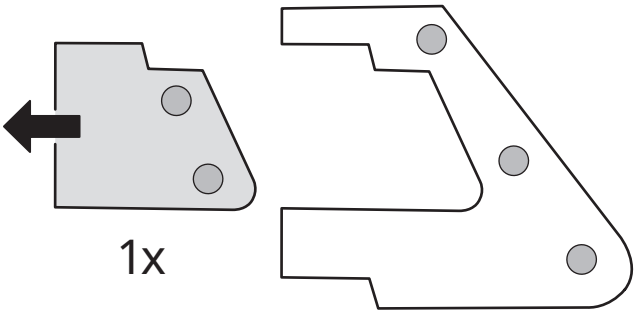
1x
1x

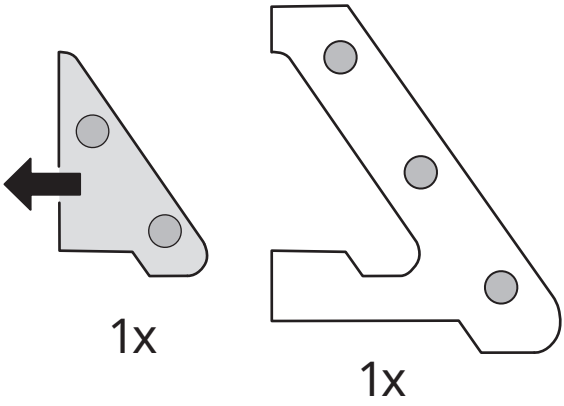
1x
1x

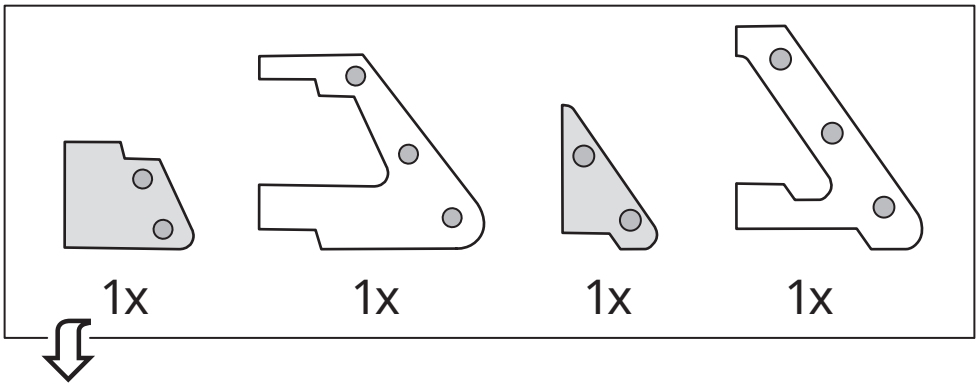

1

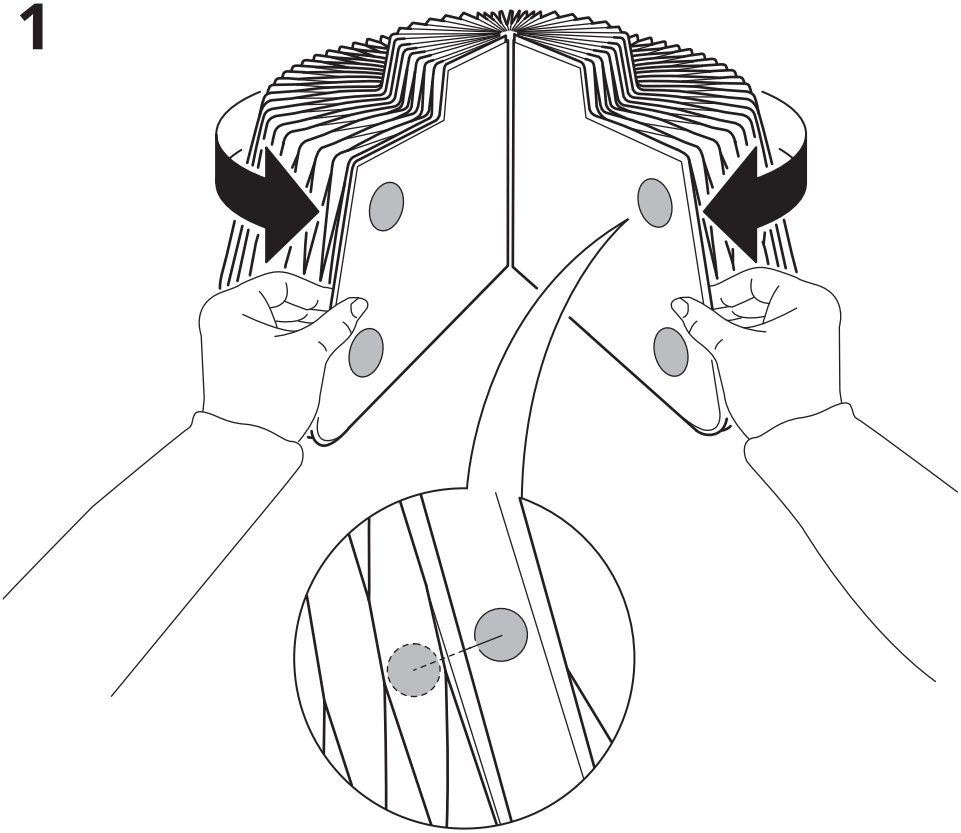

2

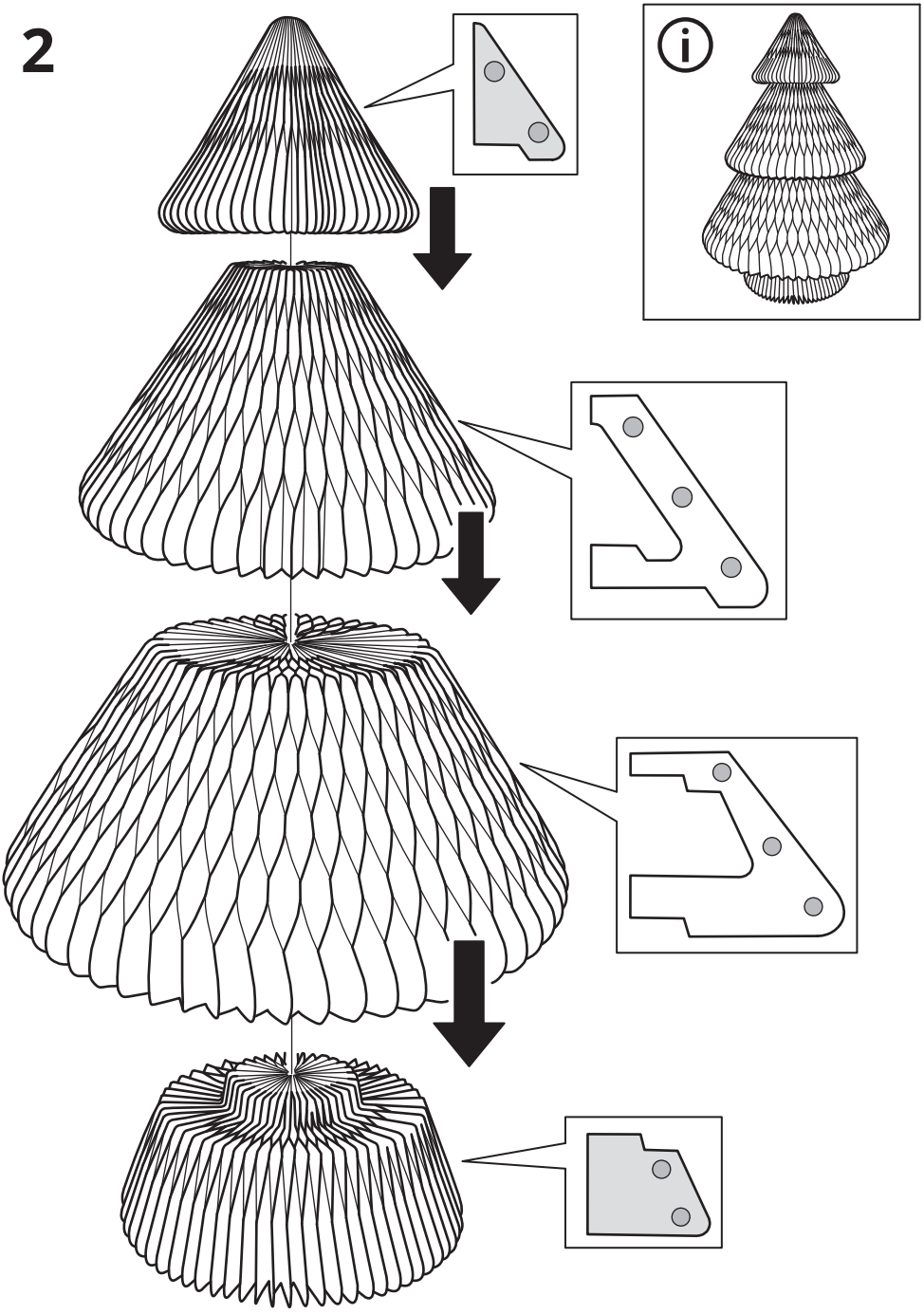

© Inter IKEA Systems B.V. 2025