FOKUSERA

en

Design and Quality
IKEA of Sweden

Please refer to the last page of this manual for the full list of IKEA appointed Authorized Service Centre and relative national phone numbers.

Contents

Safety Information	4
Use	7
Product description	8
Control panel	8
Cleaning and maintenance	9
What to do if ...	11
Technical data	12
Environmental concerns	13
IKEA GUARANTEE	14

Safety Information

Before first use

Your safety and that of others is paramount.
Remove cardboard protection pieces, protective film and adhesive labels from accessories.
Check the appliance for any transport damage.
To avoid any damage do not place any weights on the appliance. Do not expose the appliance to atmospheric agents.
This manual and the appliance itself provide important safety warnings, to be read and observed at all times.

⚠ This is the attention symbol, pertaining to safety, which alerts users to potential risks to themselves and others.
All safety warnings are preceded by the attention symbol and the following terms:

⚠ **DANGER:** indicates a hazardous situation which, if not avoided, will cause serious injury.

⚠ **WARNING:** Indicates a hazardous situation which, if not avoided, could cause serious injury.
All safety warnings give specific details of the potential danger/ warning present and indicate how to reduce risk of injury, damage and electric shock resulting from improper use of the appliance.
Carefully observe the following instructions.

Precautions and general recommendations

- The electrical installation and the electrical connection must be carried out by a qualified technician according to the manufacturer's instructions and in compliance with the local safety regulations. Do not repair or replace any part of the appliance unless specifically stated in the user manual.
- The appliance must be disconnected from the power supply before carrying out any installation work.

⚠ **WARNING:** Failure to install the screws or fixing device in accordance with these instructions may result in electrical hazards.

- Earthing of the appliance is compulsory. (Not possible for class II hoods identified by the symbol ⧈ on the dataplate).
- Do not pull the power supply cable in order to unplug the appliance.
- The electrical components must not be accessible to the user after installation.
- Do not touch the appliance with any wet part of the body and do not operate it when barefoot.
- This appliance can be used by children aged from 8 years and above and persons with reduced physical, sensory or mental capabilities or lack of experience and knowledge if they have been given supervision or instruction concerning use of the appliance in a safe way and understand the hazards involved. Children shall not play with the appliance. Cleaning and user maintenance shall not be made by children without supervision.
- All other maintenance services must be carried out by a specialised technician.
- When drilling through the wall pay attention not to damage electric connections and/or pipes.
- Air vents must always discharge to the outside.
- The manufacturer rejects all responsibilities for any damage caused by improper use or wrong settings.
- Appropriate maintenance and cleaning ensure the good working order and the best performance of the appliance. Regularly clean all stubborn surface dirt to avoid grease build up. Remove and clean or change the filter regularly. This must be completed in accordance with the “Cleaning and maintenance” instructions provided.
- Never flame cook food (flambé) under the appliance. Using free flames might cause fire.
- Failure to observe the instructions for cleaning the hood and replacing the filters may result in a fire.
- Exhaust air must not be vented through a flue used for removal of fumes produced by gas combustion appliances or other combustible materials, but must have a separate outlet. All national regulations governing extraction of fumes must be observed.
- There shall be adequate ventilation if the hood is being used at the same time as other appliances using gas or other combustible materials. The negative pressure of the room

must not exceed 4 Pa (4x 10-5 bars). For this reason ensure that the room is well ventilated. In case of doubts, please consult an autorized service assitance center or similar qualified person.

- Do not leave frying pans unattended when frying, as the frying oil may catch fire.
- Before touching the light bulbs, ensure that they are cold.
- Do not use or leave the hood without the light bulb correctly fitted, as this may cause electric shock.
- The hood is not a work surface, therefore do not place any objects on top of it or overload it.
- During all installation and maintenance operations wear appropriate working gloves.
- This appliance is not suitable for outdoor use.

⚠ **WARNING:** when the hob is in use, accessible parts of the hood may become hot.

Installation and connection

In the event of problems, contact the Authorized Service Centre. To prevent any damage, only remove the appliance from its packaging at the time of installation.

Preparing for installation

⚠ **WARNING:** this is a heavy product; the hood should only be lifted and installed by two or more people.

The minimum distance between the hob and the bottom part of the hood must not be less than 65cm for burning gas or other fuels and 60cm for electric cookers.

Before installation also check the minimum distances stated in the manual of the cooker.

If the installation instructions for the cooker specify a greater distance between cooker and hood, this distance must be observed. Range hoods and other cooking fume extractors may adversely affect the safe operation of appliances burning gas or other fuels (including those in other rooms) due to back flow of combustion gases. These gases can potentially result in carbon monoxide poisoning.

After installation of a range hood or other cooking fume extractor, the operation of flued gas appliances should be tested by a competent person to ensure that back flow of combustion gases does not occur.

Electrical connection

Make sure the power voltage specified on the appliance rating plate is the same as the mains voltage.
This information can be found on the inside of the hood, under the grease filter. Power cable replacement (type H05 VV-F) must be carried out by a qualified electrician. Contact an authorized service centre.
If the hood is fitted with an electric plug, connect the plug to a socket complying with current regulations, located in an accessible place.

⚠ **WARNING:** if no plug is fitted (direct wiring to the mains), or if the socket is not located in an accessible place, a qualified electrician should install a standardised double pole power switch that will enable complete isolation from the mains in case of category III overvoltage conditions, in accordance with wiring rules.

Use

The hood has been designed to be installed and used either as a “Extraction installation”, or as a “Recirculation installation”.

Extraction installation (see symbol in installation booklet)
Cooking steam is sucked and channelled outside the house through a discharge duct (not supplied), fitted to the hood steam outlet.
Ensure that the discharge duct is correctly fitted to the air outlet, unit using an appropriate connection system.

Important: If already installed, remove the charcoal filter/s.

Recirculation installation

(see symbol in installation booklet)
The air is filtered through one or more the charcoal filters, and then resent into room.

Important: Ensure appropriate air circulation around the hood.

Important: If the hood is supplied without charcoal filters, these must be fitted before the hood can be used. Filters are available in IKEA shops.
The hood should be installed away from particularly dirty areas, windows, doors and heat sources.
The accessories for wall fixing are not included because walls made of different materials require different types of fixing accessories. Use fixing systems suitable for the walls of your home and the weight of the appliance. For more details, contact a specialized dealer.
Keep this booklet for future consultation.

Product description

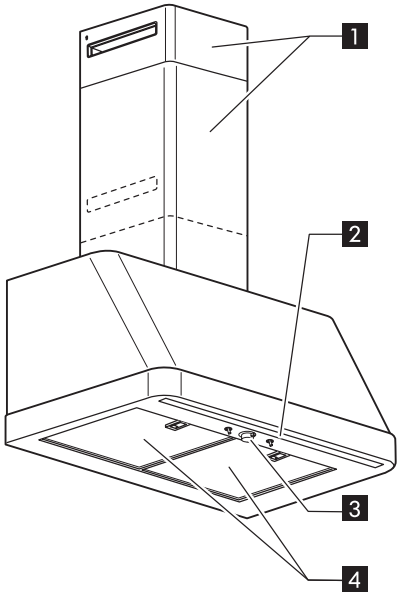

1 Chimney.

2 Light.

3 Control Panel.

4 Grease filter.

Control panel

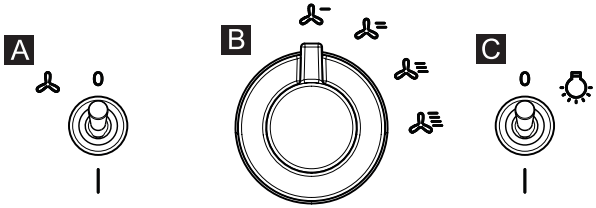

A Motor ON/OFF toggle switch

B Suction (power) speed selector knob

- Low suction (power) speed
- Medium suction (power) speed
- High suction (power) speed
- Maximun suction (power) speed

NB: the hood remains at the same speed when switched ON/OFF using the toggle switch

C Light ON/OFF toggle switch

Cleaning and maintenance

⚠ **WARNING:**

- Never use steam cleaning equipment.
- Disconnect the hood from the electric power supply.

IMPORTANT: do not use corrosive or abrasive detergents. If any of these products accidentally comes into contact with the appliance, clean immediately with a damp cloth.

- Clean the surfaces with a damp cloth. If it is very dirty, add a few drops of washing up detergent to the water. Finish off with a dry cloth.

IMPORTANT: do not use abrasive sponges or metallic scrapers or scourers. Over time, these can ruin the surface.

- Use detergents specifically designed for cleaning the appliance and follow the manufacturer instructions.

IMPORTANT: clean the grease filters at least monthly to remove any oil or grease residuals.

To clean the grease filter

The metal grease filter has an unlimited life and must be washed once a month by hand or dishwasher at low temperature and with a short cycle. With cleaning in a dishwasher the grease filter may become dull; this does not effect its filtering capacity.

Grease filter maintenance:

1. Disconnect the hood from the electric power supply.
2 Remove the grease filters: pull the spring release handle downwards, then remove the filter.
3. After cleaning the grease filter, remount in reverse order ensuring the entire extraction surface is covered.

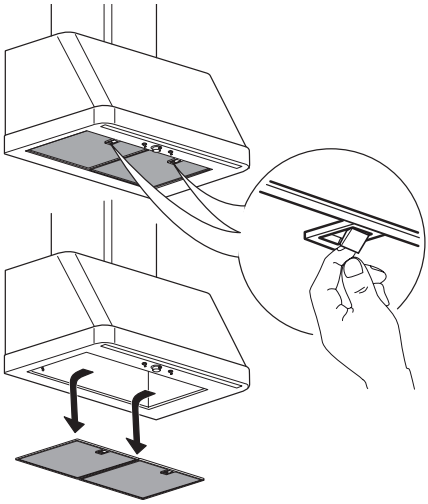

Charcoal filter maintenance (if the hood is installed in recirculation mode)

1. Pull out the plug or disconnect the power supply.
2. Remove the grease filter
3. If the carbon filters are already fitted (two filters that cover the protective grilles for the motor impeller) and have to be replaced, turn the central handle anti-clockwise to unlock them.
4. Open the two filter shells
5. Pull out the two circular mats
6. Proceed in reverse order to fit the new filters.
7. Refit the grease filters.

Unlike traditional charcoal filters, this charcoal filter can be washed and reactivated.
With normal hood use, the filter should be cleaned once a month. The best way to clean the filter is in a dishwasher at the highest temperature possible, using a normal dishwasher detergent. To avoid particles of food or dirt settling on the filter during washing and giving rise to unpleasant smells, it is advisable to wash the fi lter on its own. After washing, dry the filter in the oven at 100°C for 10 minutes to reactivate it.The filter will retain its odour-absorbing capacity for three years, after which it will have to be replaced.

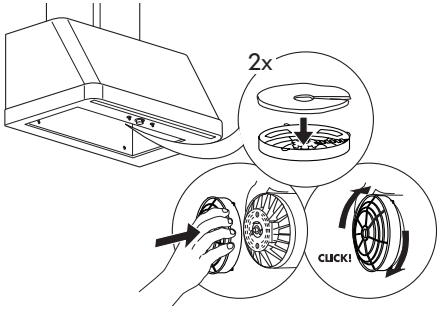

Lamp maintenance
The hood is equipped with a lighting system based on LED technology.
The LEDs guarantee an optimum lighting, a duration up to 10 times as long as the traditional lamps and allow to save 90% electrical energy.

For replacement, contact the Authorized Service Centre.

What to do if ...

Problem	Possible cause	Solution
The appliance does not work	There is no mains electrical power	Check for the presence of mains electrical power. Turn off the appliance and restart it to see if the faults persists.
	The appliance is not connected to the electrical supply	Check if the appliance is connected to the electrical supply. Turn off the appliance and restart it to see if the faults persists.
The hood's suction level is not enough	The suction speed is too low	Check the suction speed and adjust as necessary.
	The grease filters are dirty 4	Check that the filters are clean If not, clean the filters in the dishwasher.
	The anti-odors filters are dirty	Check that the anti-odour filters are properly washed as recommended
	The air vents ar e obstructed	Check the air vents for any obstructions and remove as necessary.
The light does not work	The LED is broken 2	For replacement, contact the Authorized Service Centre.

Before contacting the Authorized Service Centre:
Switch the appliance on again to see if the problem has disappeared. If not, switch it off again and repeat the operation after an hour. If your appliance still does not work properly after carrying out the checks listed in the troubleshooting guide and switching the appliance on again, contact the Authorized Service Centre, clearly explaining the problem and specifying:

- the type of fault;
- the model;
- the type and serial number of the appliance (given on the rating plate);
- the Service number (the number after the word SERVICE on the rating plate inside the appliance).

SERVICE 0000 000 00000

Technical data

Type of product		Wall mounted hood	
Dimensions	Width	mm	698
	Depth	mm	450
	Total height in extraction installation version min-max	mm	770 (770)
	Total height in recirculation installation version min-max	mm	1014-1083
Total power		W	257
Lamps info	Type		LED
	Number & Power	W	1X7
	Socket		STRIP LED
Installation minimum height - gas hob		mm	650
Installation minimum height - elec hob		mm	600
Product Weight		Kg	16
Product Information compliant to commission regulation (EU) No 65/2014 - UK SI 2019 No.539			
Model identifier			**FOKUSERA 00526998**
Annual Energy Consumption - AEC Hood		kWh/A	38.2
Energy Efficiency Class			A+
Fluid Dynamic Efficiency FDE Hood		%	35.2
Fluid Dynamic Efficiency Class			A
Light Efficiency - LE Hood		lux/W	68.1
Light Efficiency Class		lux	A
Grease Filtering efficiency Hood - GFE Hood		%	75.1
Grease Filtering efficiency Class			C
Minimum Airflow in normal use		m^3/h	275.0
Maximum Airflow in normal use		m^3/h	630.0
Air Flow at intensive/boost setting		m^3/h	NA
A-Weighted Sound Power Emission at minimum speed		db(A) re 1pW	45.0
A-Weighted Sound Power Emission at maximum speed		db(A) re 1pW	64.0
A-Weighted Sound Power Emission at Intensive or boost speed		db(A) re 1pW	NA
Power consumption off mode-P0		W	0.49
Power consumption in stand by mode -Ps		W	NA
Product Information compliant to commission regulation (EU) No 66/2014			
Time increase factor - f			0.7
Energy efficiency index - EElhood			42.3
Measured airflow rate at best efficiency point -QBEP		m^3/h	365.0
Measured air pressure at best efficiency point -PBEP		Pa	450.0
Maximum Airflow - Qmax		m^3/h	-
Measured electric power input at best efficiency point - WBEP		W	129.5
Nominal Power of the lighting system - WL		W	7.0
Average illumination of the lighting system on the cooking surface - Emiddle		lux	477.9

The technical information is situated in the rating plate on the internal side of the appliance.

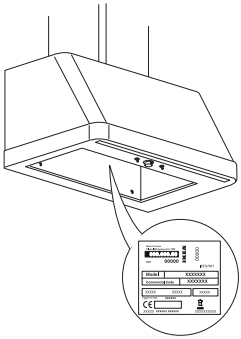

Environmental concerns

Disposal of packing

The packing material is 100% recyclable and is marked with the recycle symbol ♲. The various parts of the packing must therefore be disposed of responsibly and in full compliance with local authority regulations governing waste disposal.

Scrapping the product

- This appliance is marked in compliance with European Directive 2012/19/EU, Waste Electrical and Electronic Equipment (WEEE).
- By ensuring this product is disposed of correctly, you will help prevent potential negative consequences for the environment and human health, which could otherwise be caused by inappropriate waste handling of this product.

The symbol on the product or on the accompanying documentation indicates that it should not be treated as domestic waste but must be taken to an appropriate collection centre for the recycling of electrical and electronic equipment.

Scrapping of household appliances

- This appliance is manufactured with recyclable or reusable materials. Dispose of it in accordance with local waste disposal regulations. Before scrapping, cut off the power supply cable.
- For further information on the treatment, recovery and recycling of household electrical appliances, contact your competent local authority, the collection service for household waste or the store where you purchased the appliance.

Energy saving tips

- Switch ON the hood at minimum speed when you start cooking and kept it running for few minutes after cooking is finished.
- Increase the speed only in case of large amount of smoke and vapour and use boost speed(s) only in extreme situations.
- Replace the charcoal filter(s) when necessary to maintain a good odour reduction efficiency.
- Clean the grease filter(s) when necessary to maintain a good grease filter efficiency.
- Use the maximum diameter of the ducting system indicated in this manual to optimize efficiency and minimize noise.

Declaration of conformity CE

This appliance has been designed, manufactured and marketed in compliance with:

- safety objectives of the “Low Voltage” Directive 2014/35/EU;
- the eco design requirements of european regulations n. 65/2014, and n. 66/2014 in conformity to the european standard en 61591;
- the protection requirements of Directive “EMC” 2014/30/EU.

Electrical safety of the appliance can only be guaranteed if it is correctly connected to an approved earthing system.

IKEA GUARANTEE

How long is the IKEA guarantee valid?
This guarantee is valid for five years from the original date of purchase of your appliance at IKEA Pty Ltd,
ABN 84 006 270 757, and IKEA NEW ZEALAND LIMITED, NZBN is 9429047515468. The original sales receipt, is required as proof of purchase. If service work is carried out under guarantee, this will not extend the guarantee period for the appliance.

Who will execute the service?
IKEA Authorized Service Centre will provide the service through its own service operations or Authorized Service Centre network. Contact IKEA for further information.

- If you encounter any trouble with the appliance and wish to register a service call or make a claim, please refer to www.ikea.com for your local store after sales customer service center phone number, online email and opening times or refer to the phone numbers shown below.

The principal address and contact details in Australia are:
IKEA Authorized Service Centre at
www.IKEA.com or
IKEA Pty Ltd
IKEA Service OfficeL1 Clock Tower, 630 Princes HighwayTempe, NSW 2044
(02) 9010 0264

The principal address and contact details in New Zealand are:
IKEA Authorized Service Centre at
www.IKEA.com. or
IKEA New Zealand Limited
IKEA Service Office
L1 Clock Tower, 630 Princes Highway
Tempe, NSW 2044.

Please refer to contact us section on the website.

What does this guarantee cover?
The guarantee covers applicable faults of the appliance, which have been caused by faulty construction or material faults from the date of purchase from IKEA. This guarantee applies to domestic use only. The products have been designed and tested for domestic purposes only and this guarantee does not cover damage arising from use of the Product in a commercial environment. The exceptions are specified under the headline “What is not covered under this guarantee?” Within the guarantee period, the costs to remedy the fault e.g. repairs, parts, labour and travel will be covered, provided that the appliance is accessible for repair without special expenditure. Replaced parts become the property of IKEA.
The guarantee exists only if the appliance complies and is installed in accordance with:

- The technical specifications.
- The Assembly Instructions and usermanual Safety Information.

IKEA’s guarantee is subject to Australian Consumer Law - see Schedule 2 to Competition and Consumer Act, 2010 and New Zealand Consumer Guarantees Act 1993. This guarantee is in addition to (and does not exclude, restrict or modify in any way) any non-excludable statutory warranties in Australia.

What will IKEA do to correct the problem?
IKEA appointed service provider will examine the product and decide, at its sole discretion, if it is covered under this guarantee. If considered covered, IKEA service provider or its authorized service partner through its own service operations, will then, at its sole discretion, either repair the defective product or replace it with the same or a comparable product.

What is not covered under this guarantee?

- What is not covered under this guarantee?
- Normal wear and tear.
- Deliberate or negligent damage,damage caused by failure to observeoperating and maintenance instructions,incorrect installation or by connectionto the wrong voltage, damage causedby chemical or

electrochemical reaction,rust, abrasion or scratching, corrosion orwater damage including but not limitedto damage caused by excessive lime inthe water supply, damage caused byabnormal environmental conditions.
- Damage caused from the use of theappliance in a manner other thanthe use for which it was specificallydesigned.
- Damage caused by power outages,electrical power surge or impropersupply voltage via connection to SupplyAuthority mains or alternative supplysystems.
- Consumable parts including batteriesand lamps, removable wire, glass andplastic trays and other accessories.
- Internal or external damage as a resultof excessive use of cleaning products orcleaning agents.
- Non-functional and decorative partswhich do not affect normal use of theappliance, including any scratches andpossible color differences.
- Accidental damage or blockages causedby foreign objects, eg. coins, underwires,nails, buttons or jewellery, or substancesand cleaning or unblocking of filters,drainage systems or soap drawers
- Damage caused by vermin, insects orpets.
- Note – internal or external abinettransport damage must be reportedwithin 7 days of purchase date.
- Damage to the following parts: ceramicglass, accessories, crockery and cutlerybaskets, feed and drainage pipes, seals,lamps and lamp covers, screens, knobs,casings and parts of casings. Unless suchdamages can be proved to have been caused by production faults.
- Cases where no fault could be foundduring a technician's visit.
- Any consequential loss due to appliancefailure.
- Repairs not carried out by our appointedservice providers and/or an authorizedservice contractual partner or where nonoriginal parts have been used.
- Repairs to parts or systems caused byunauthorized modifications made toappliance.
- Repairs caused by installation which isfaulty or not according to specification.
- Problems caused by incorrect orinadequate venting of the appliance.
- The use of the appliance in a nondomestic environment i.e. professionaluse.
- Transportation damages. If a customertransports the product to his home oranother address, IKEA is not liable forany damage that may occur duringtransport. However, if IKEA delivers the productto the customer's delivery address, thendamage to the product that occursduring this delivery will be covered byIKEA.
- Cost for carrying out the initialinstallation of the IKEA appliance.However, if an IKEA appointedAuthorized Service Centre or its authorizedservice partner repairs or replacesthe appliance under the terms of thisguarantee, the Authorized Service Centreor its authorized service partner willreinstall the repaired appliance or installthe replacement, if necessary.
- The benefits conferred by this expresswarranty are in addition to all otherconditions, warranties, guarantees, rightsand remedies expressed or impliedby the Trade Practices Act and similarState and Territory laws and all otherobligations and liabilities on the partof the manufacturer or supplier andnothing contained herein shall restrict or modify such rights, remedies, obligations or liabilities.

How country law applies?

Our goods come with guarantees that Our goods come with guarantees that cannot be excluded under the Australian Consumer Law (ACL) and New Zealand Consumer Guarantees Act 1993.

You are entitled to a replacement or refund for a major failure and for compensation for any other reasonably foreseeable loss or damage. You are also entitled to have the goods

repaired or replaced if the goods fail to be of acceptable quality and the failure does not amount to a major failure.
This guarantee is not intended in any way to limit or exclude such rights and remedies that you may have under law.
You can find out more information in the following web pages:
- The Australian Consumer Law on the ACCC website: www.accc.gov.au.
- The Commerce Commission website : https://comcom.govt.nz/
- Consumer Protection website: https://www.consumerprotection.govt.nz/general-help/consumer-laws/consumer-guarantees-act.

Area of validity
The IKEA guarantee applies only to products purchased and installed in AUSTRALIA and New Zealand.

What you must do to make a claim under the guarantee
To make a claim under the guarantee contact IKEA Authorized Service Centre at the above address or refer to www.ikea.com for your local store customer service phone number, online email and opening times. Please describe the problem that you are facing with the appliance in detail along with your product article number (8 digit code) and date of purchase at the time of call registration.

Please do not hesitate to contact the dedicated Authorized Service Centre for IKEA appliances to:
1. Make a service request under thisguarantee.
2. Ask for clarification on installation of theIKEA appliance in the dedicated IKEAkitchen furniture.
3. Ask for clarification on user manualcontents and specifications of the IKEAappliance.

To ensure that we provide you with the best assistance, please read carefully the Assembly Instructions and/or the User Manual section of this booklet before contacting us.

How to reach if you need our service
The IKEA Authorized Service Centre will assist you on the phone with basic trouble shooting for your appliance at the time of warranty call registration.
Please refer to www.ikea.com or to below phone numbers and select your local store .

Australia: (02) 9010 0264
New Zealand: please refer to contact us section on the website.

Please describe the problem that you are facing with the appliance in detail along with your product model number, serial number, date of purchase at the time of call registration.
Please also always refer to the IKEA article number (8 digit code) and 12 digit service number placed on the rating plate of your appliance.

SAVE THE SALES RECEIPT!
Kindly keep all these details and original invoice of purchase handy during the service technician's visit to enable him to carry out the job. It is your proof of purchase and required for the guarantee to apply.

LIB0138006E Ed.05/25

© Inter IKEA Systems B.V. 2022

23244

AA-2044814-7