BISSA

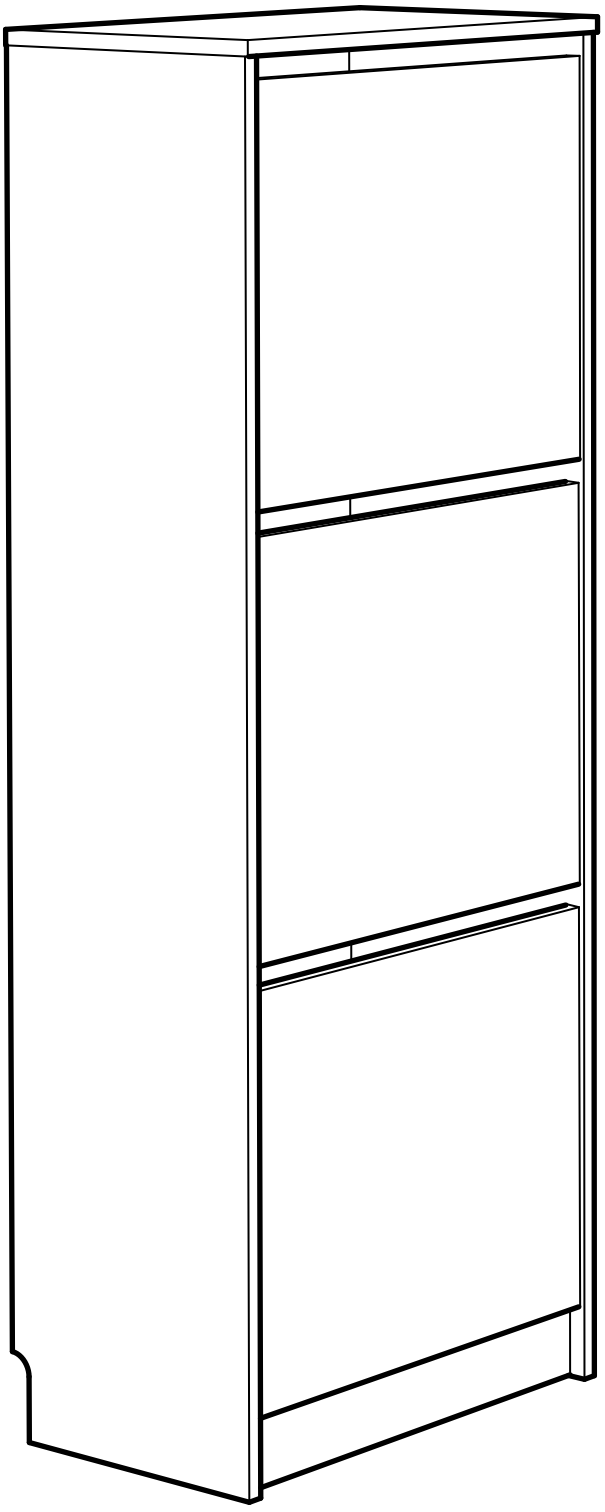

Design and Quality
IKEA of Sweden

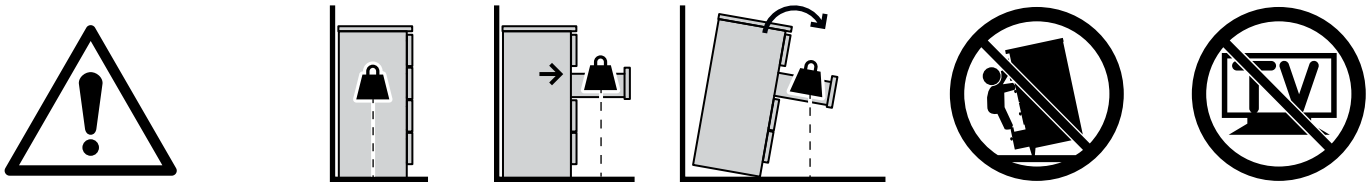

English

WARNING!

Serious or fatal crushing injuries can occur from furniture tip-over. To reduce the risk of furniture tip-over:

ALWAYS secure this furniture to the wall using tip-over restraints.

To further reduce the risk of serious injury and death from tip-overs:

Place heaviest items in the lower drawer.

Do not set TVs or other heavy objects on top of this product.

Never let children climb or hang on drawers, doors, or shelves.

Read and follow each step of the instruction carefully.

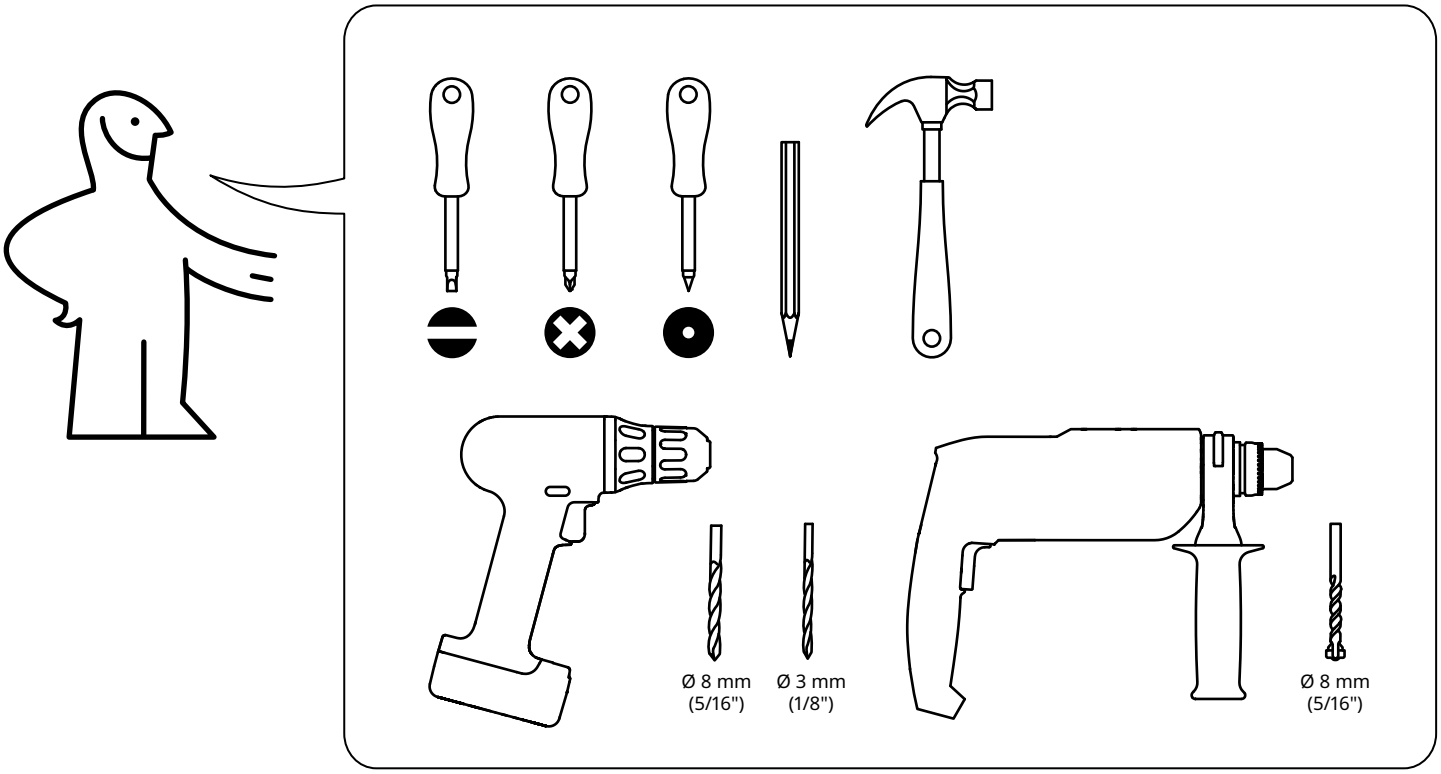

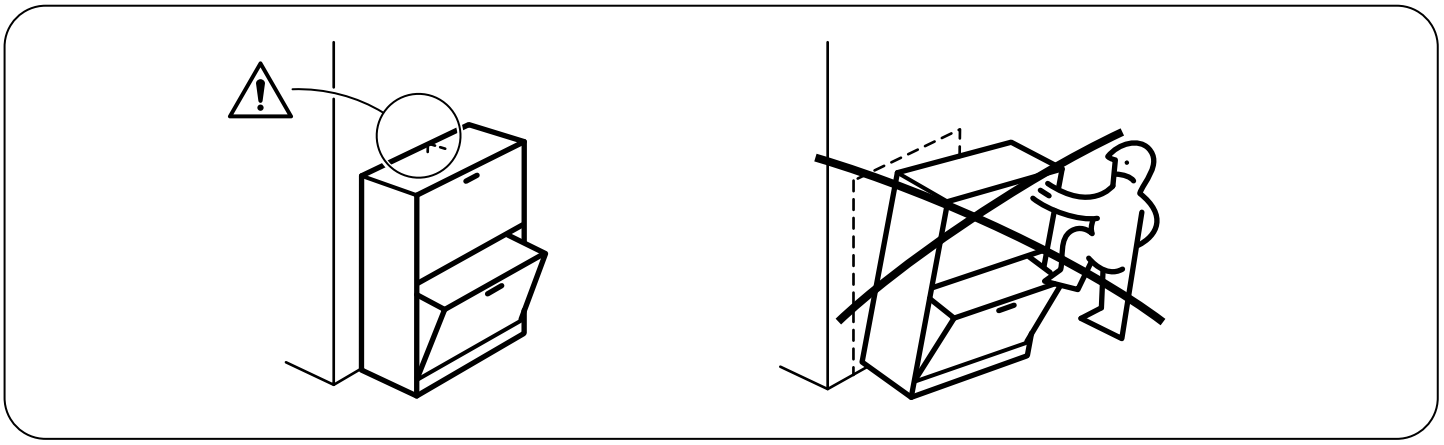

www.IKEA.com/secure-it

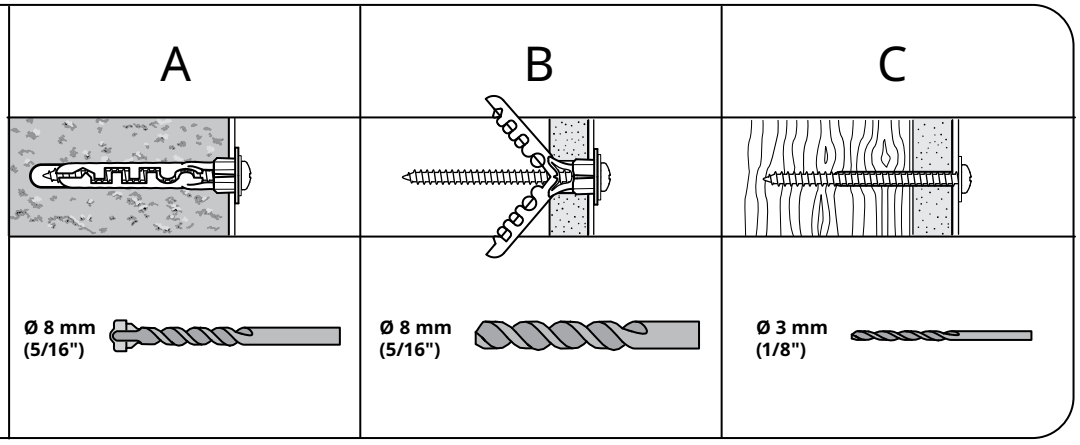

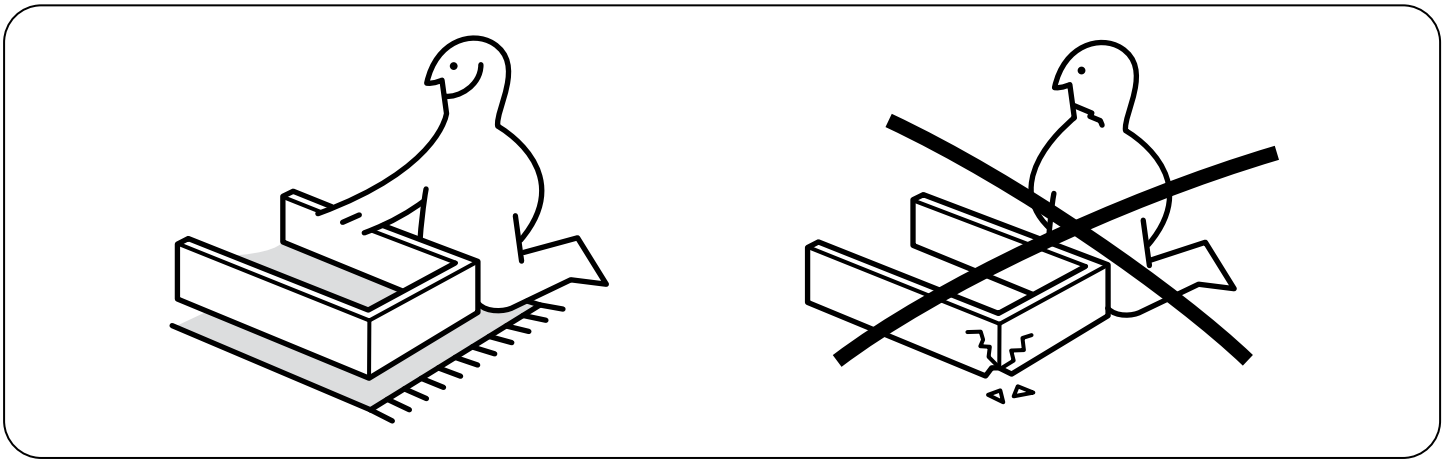

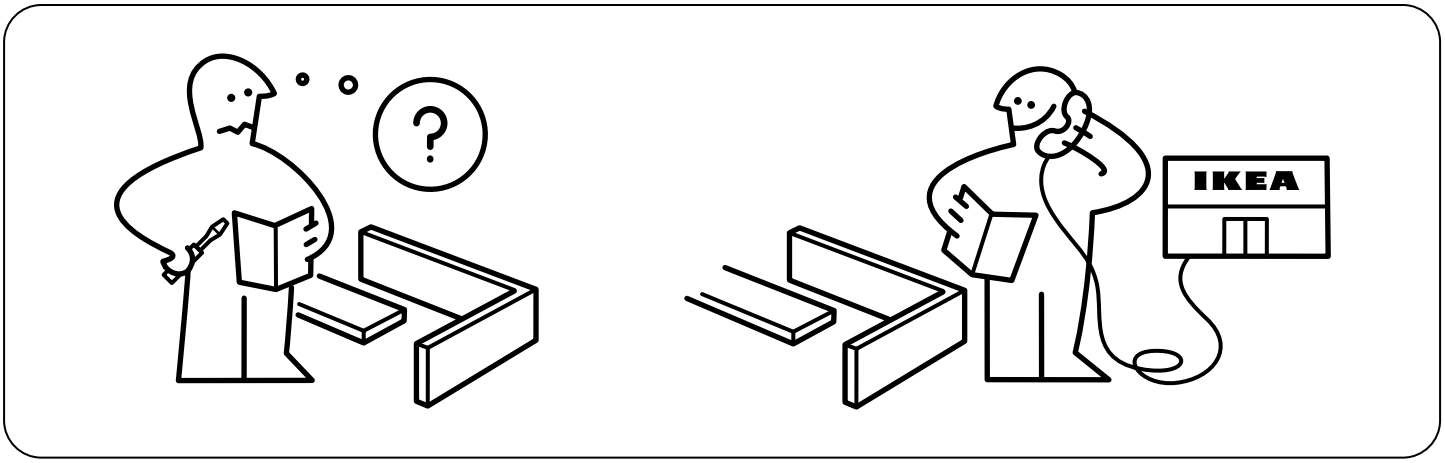

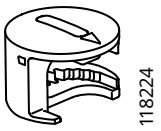
118224

10x

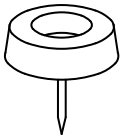
107849

4x


109535

18x

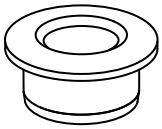
10095065

6x

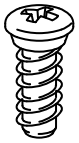
112792

24x


100347

6x

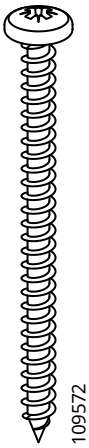
109572

2x

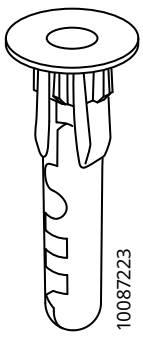
10087223

2x

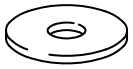
100823

2x

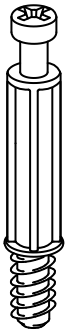
118331

10x

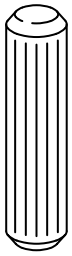
101350

10x

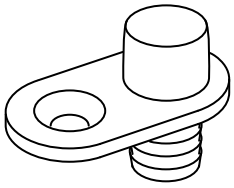
10097027

6x

1

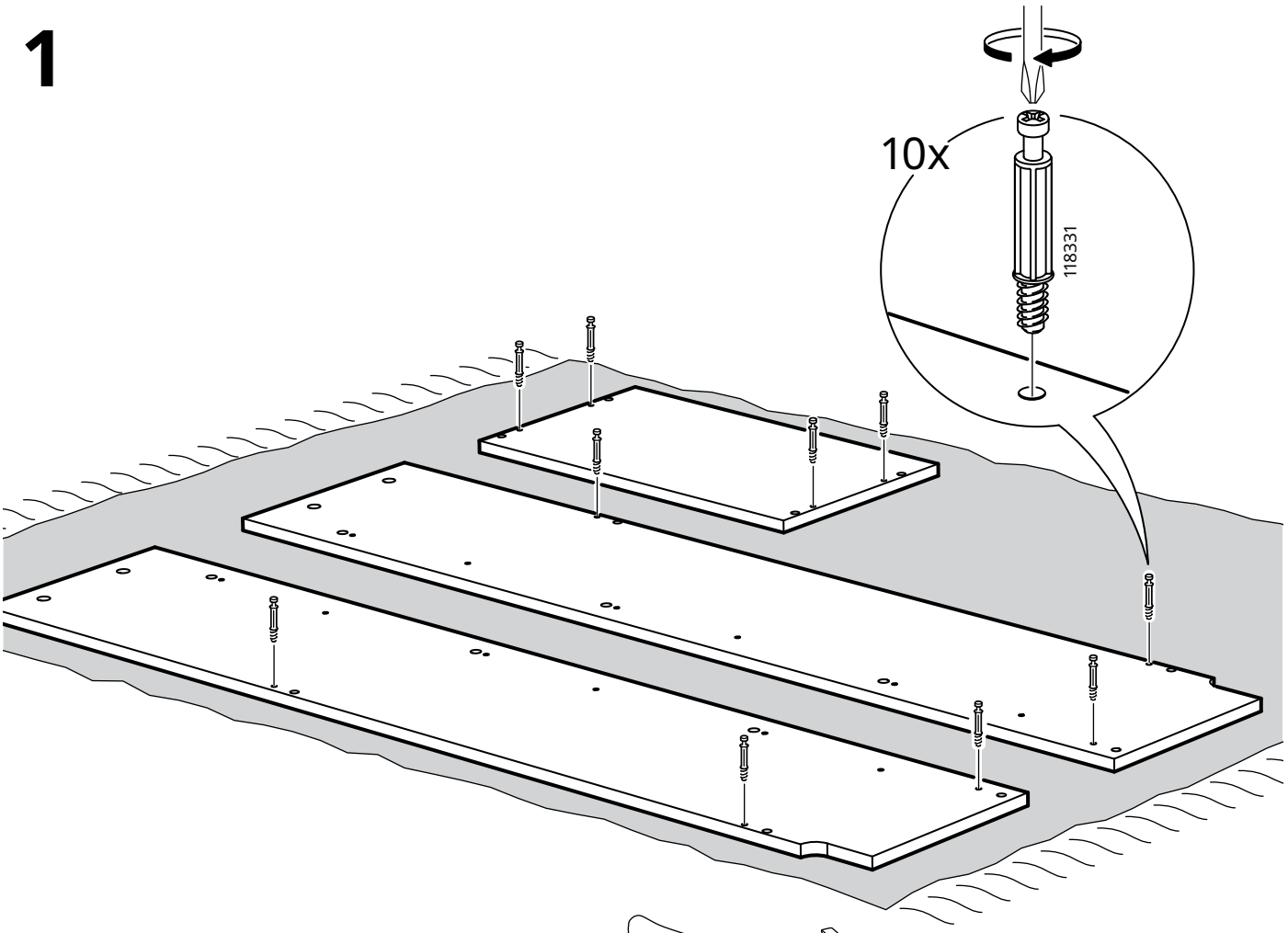

2

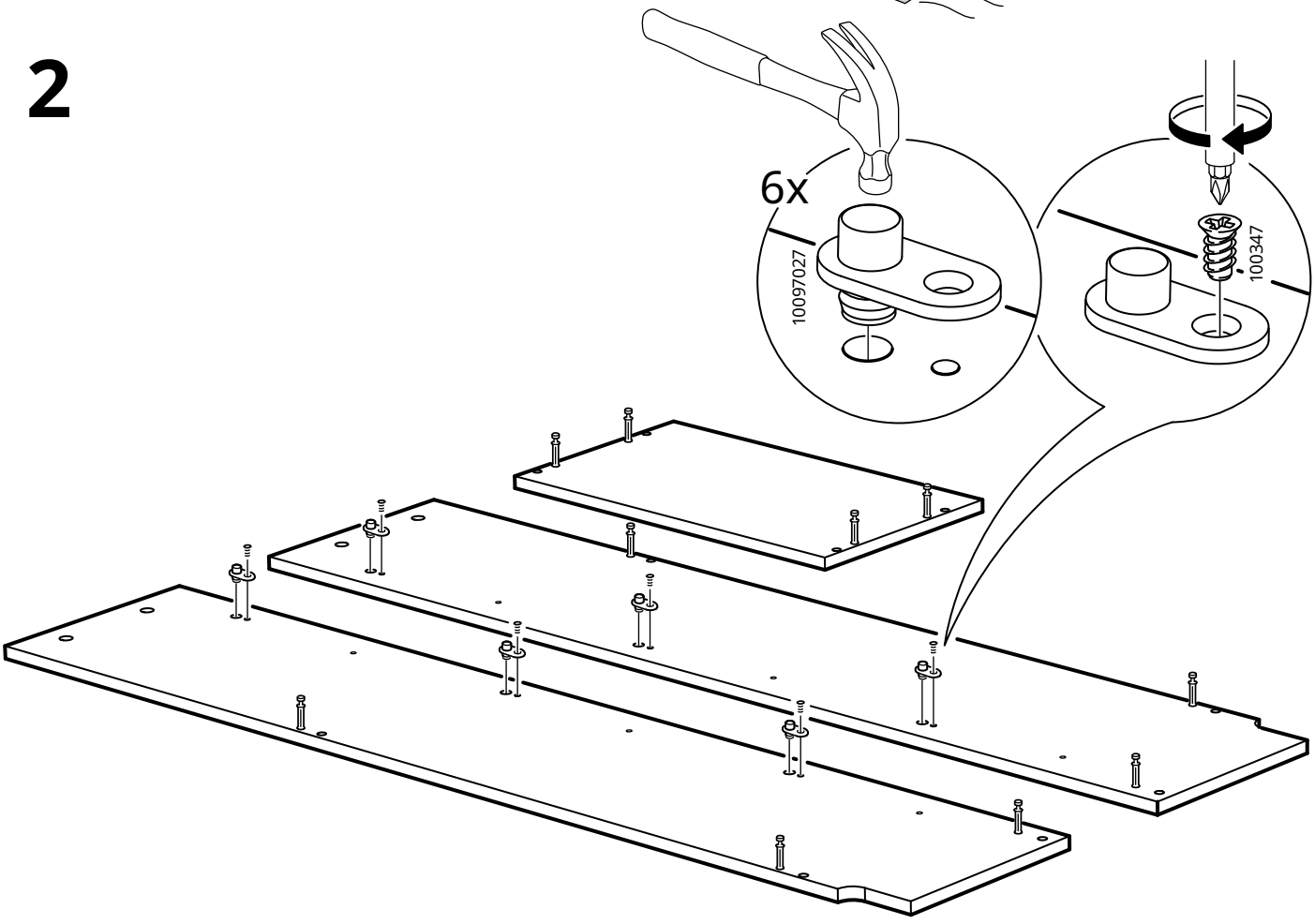

3

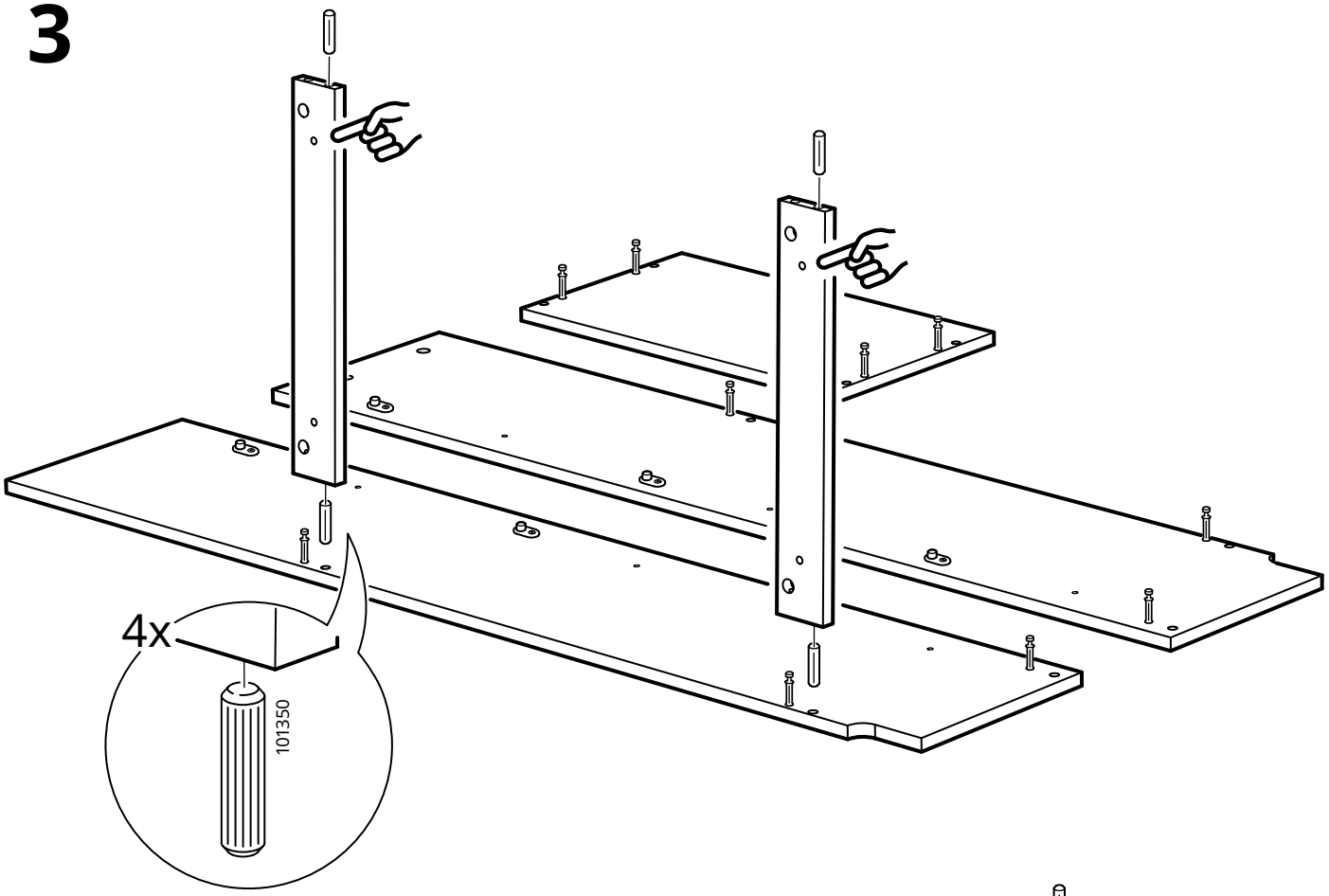

4

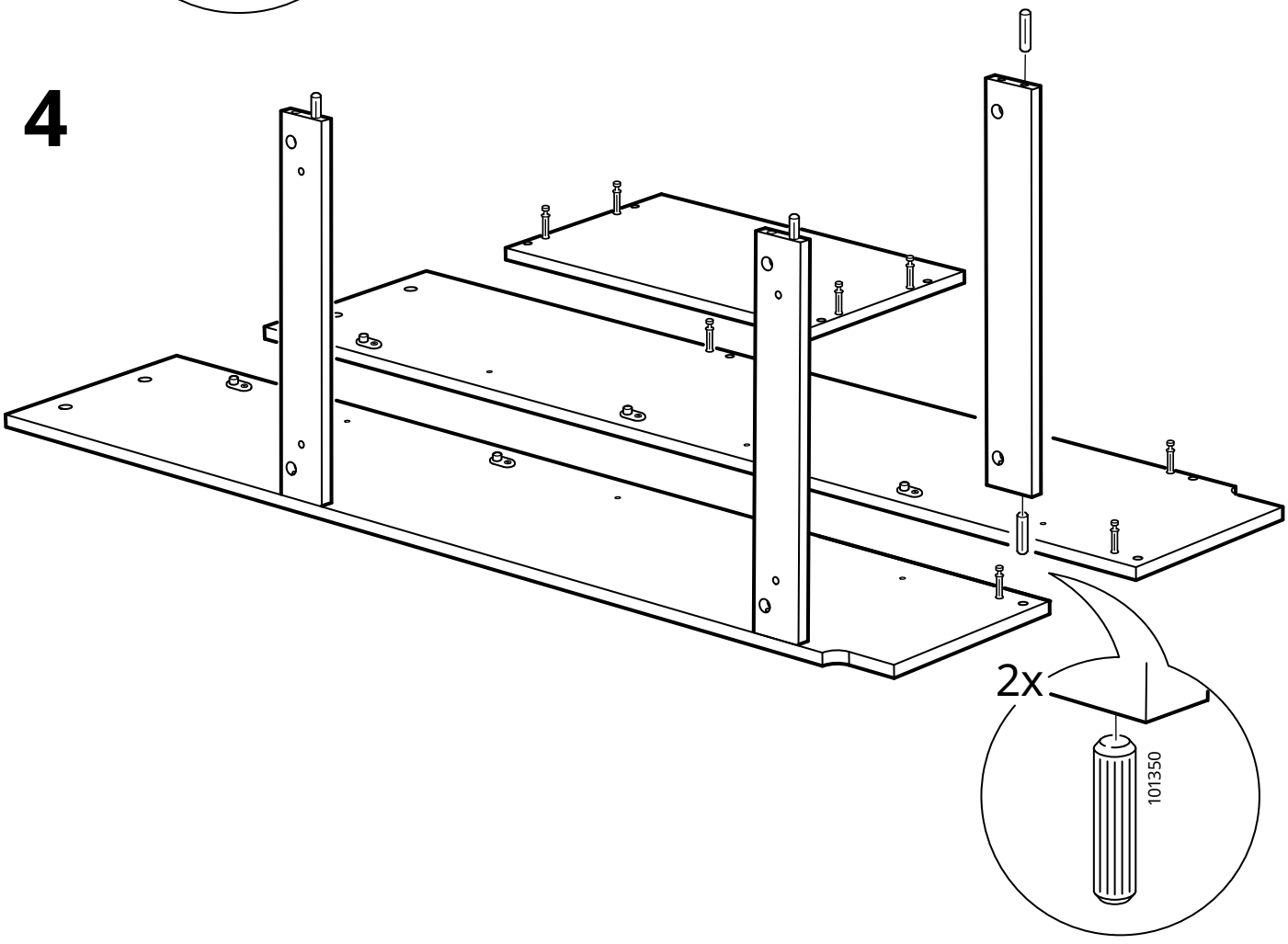

5

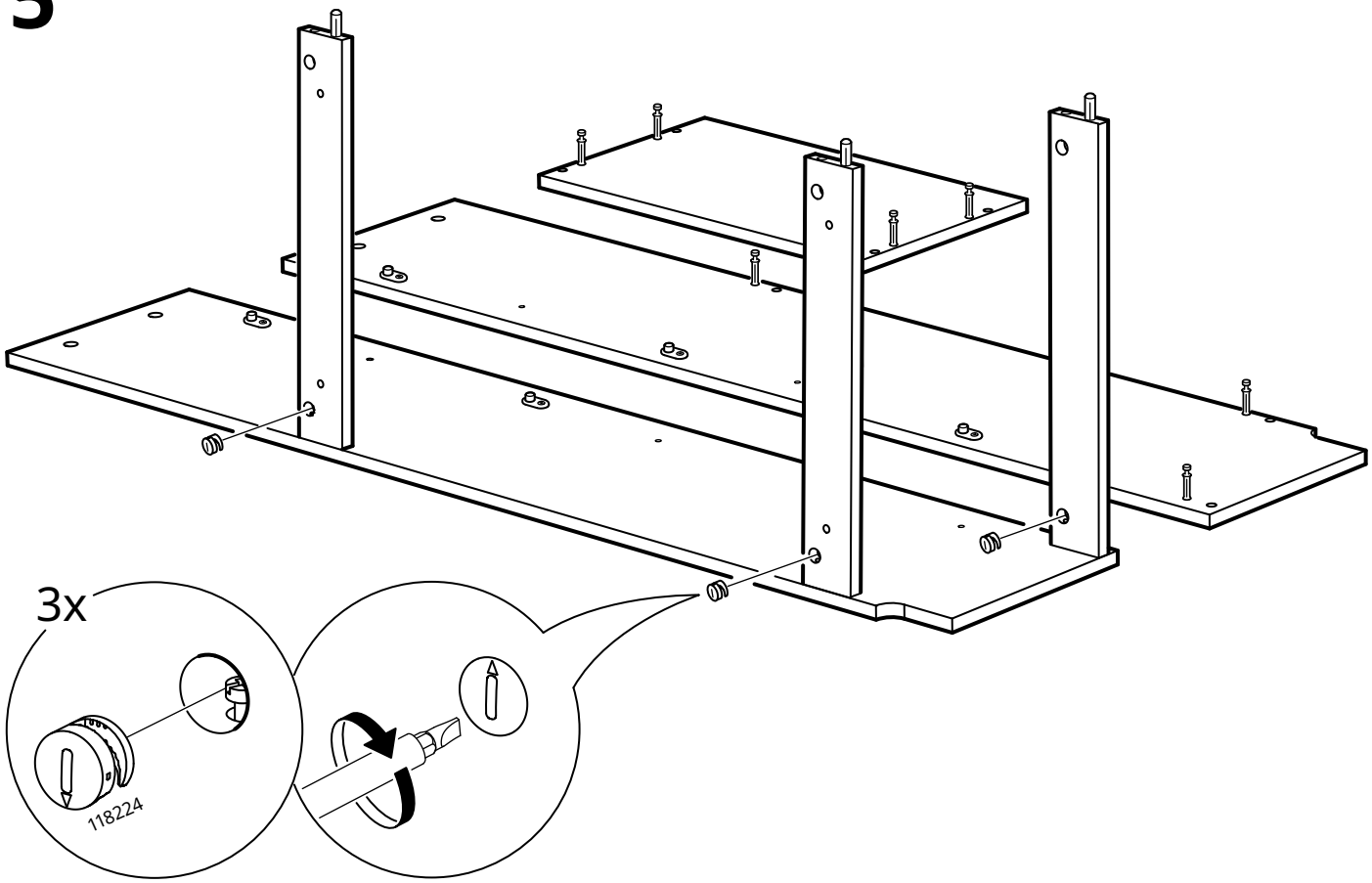

6

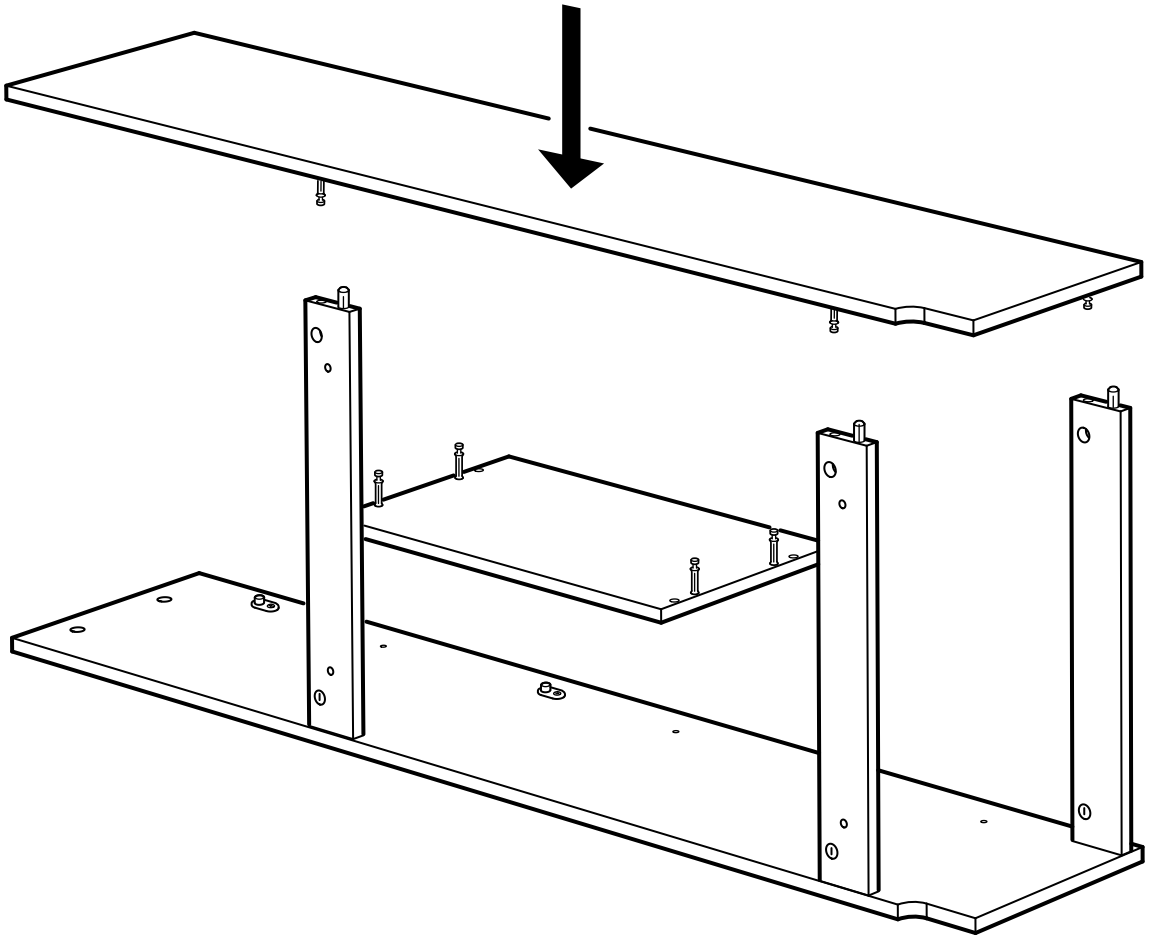

7

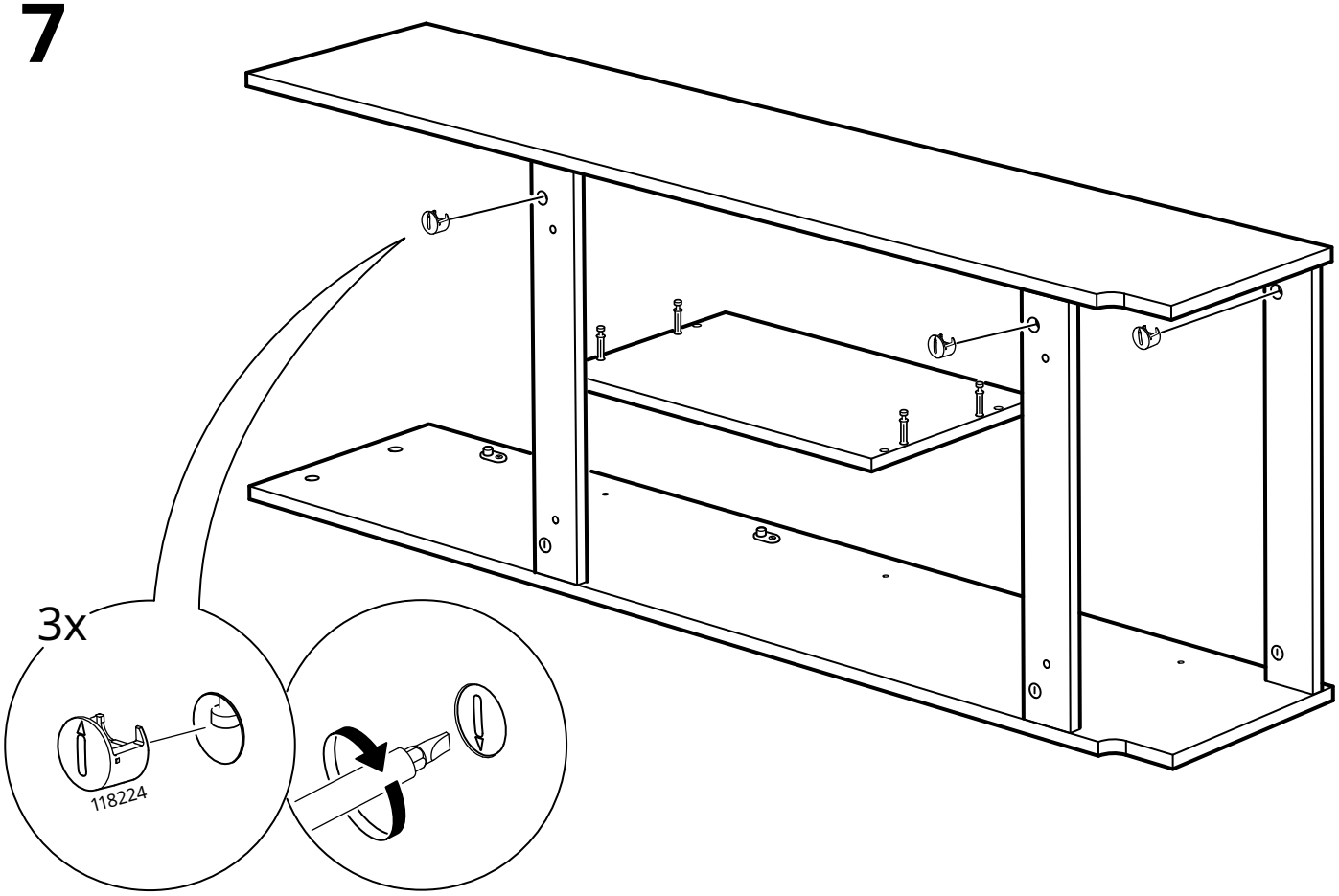

8

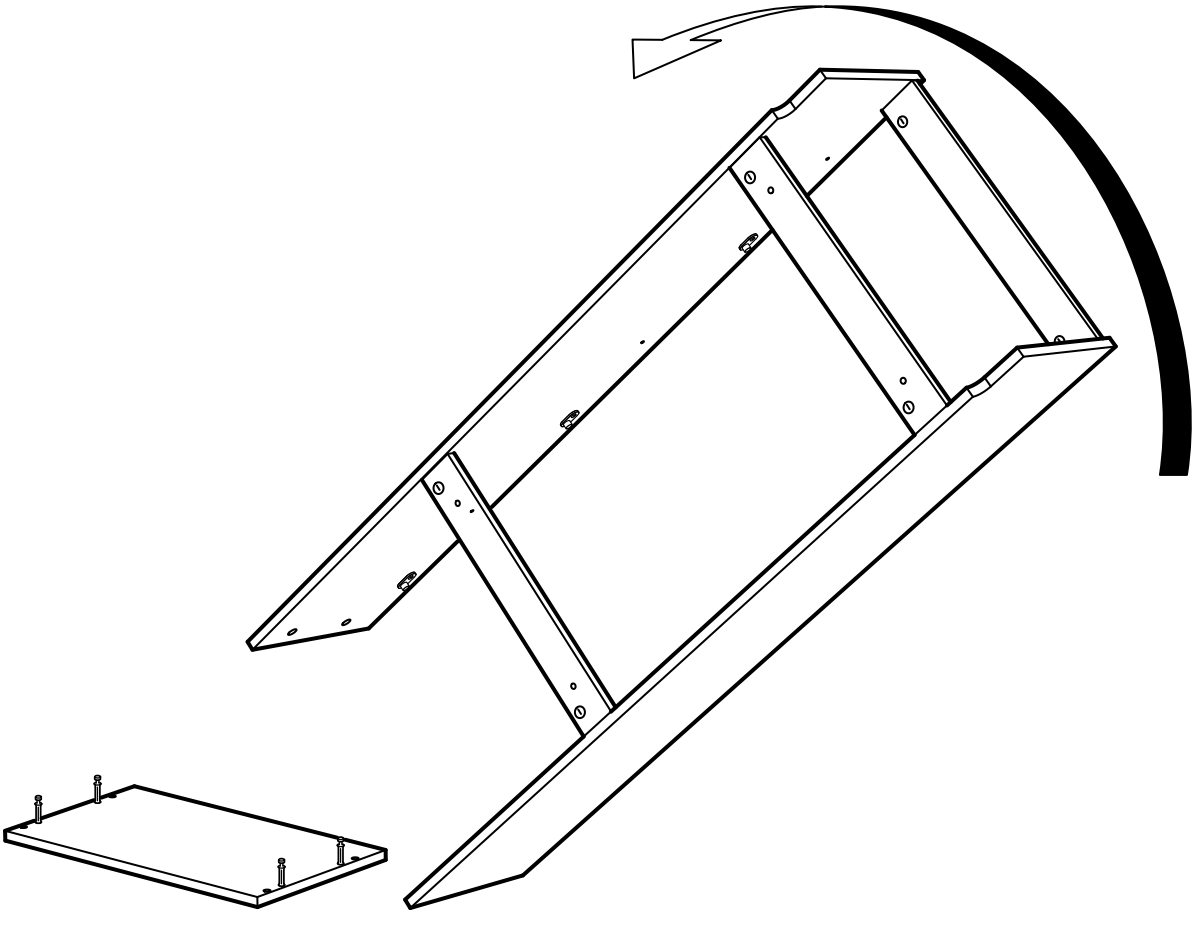

9

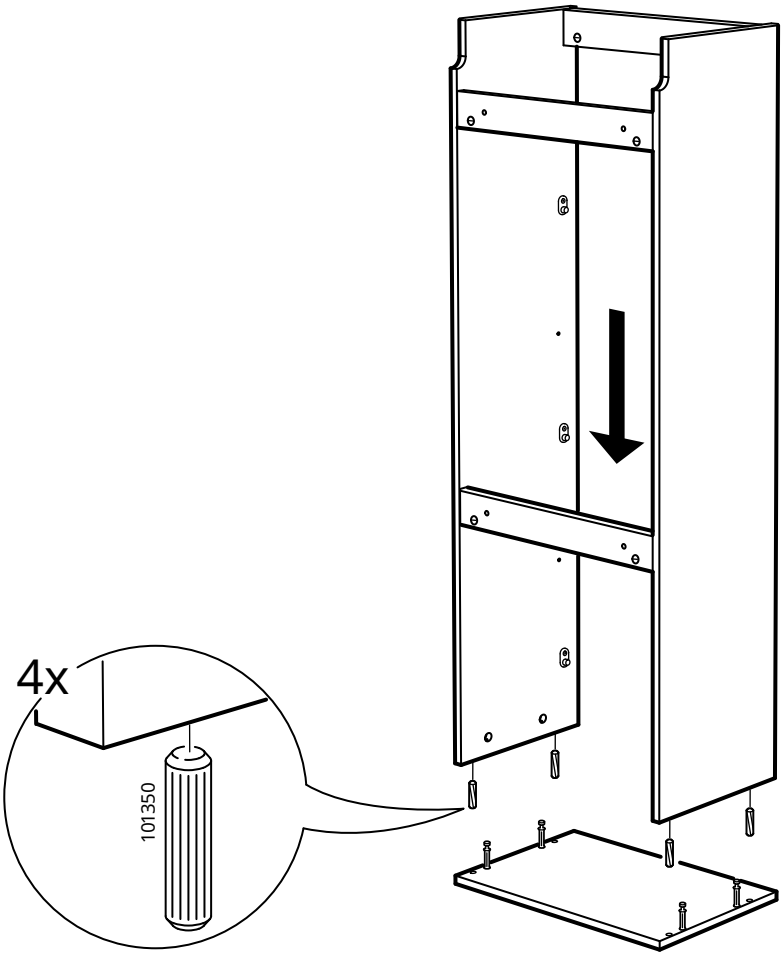

10

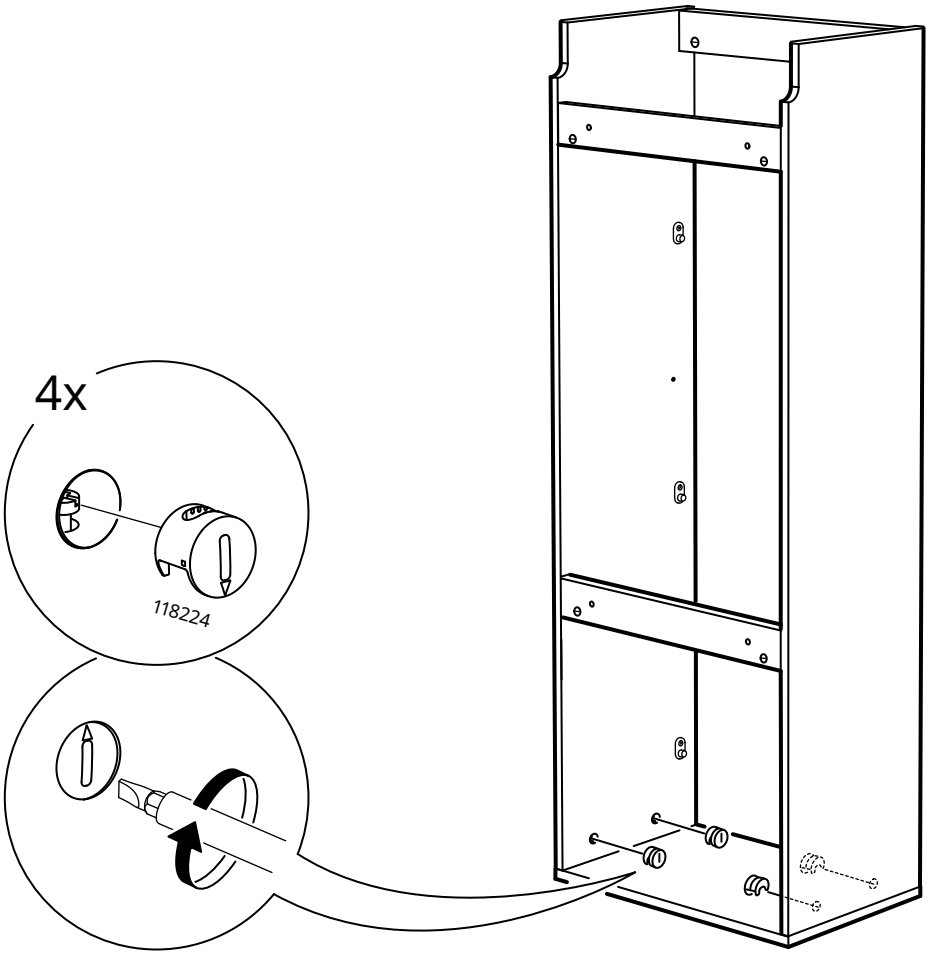

11

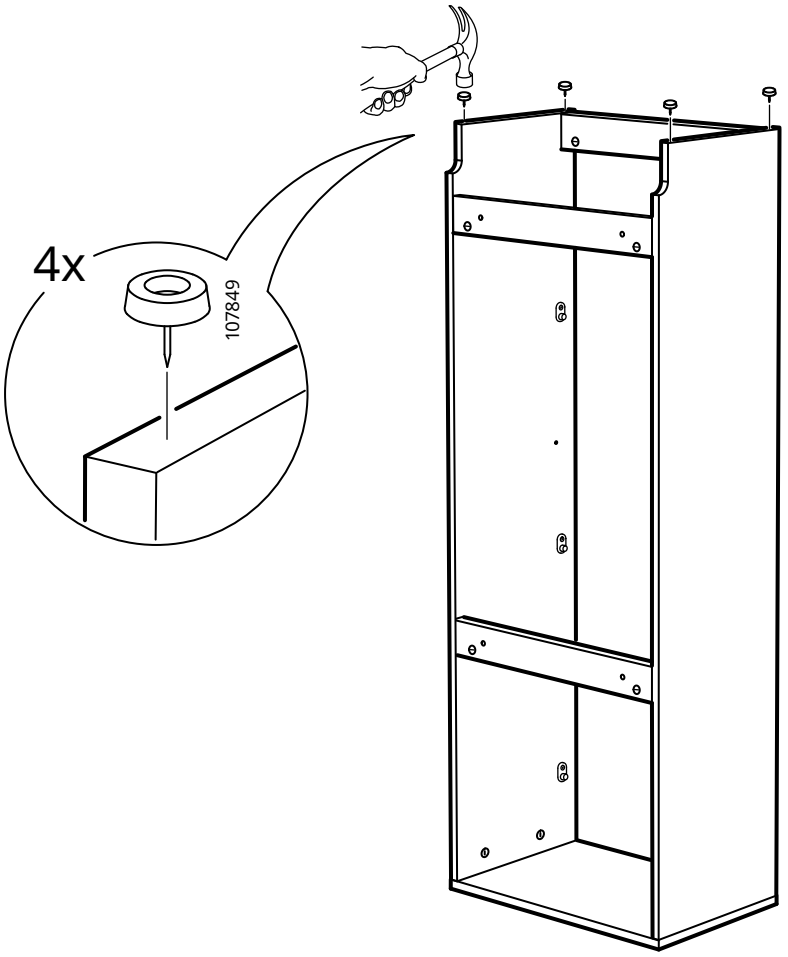

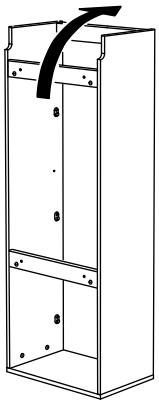

12

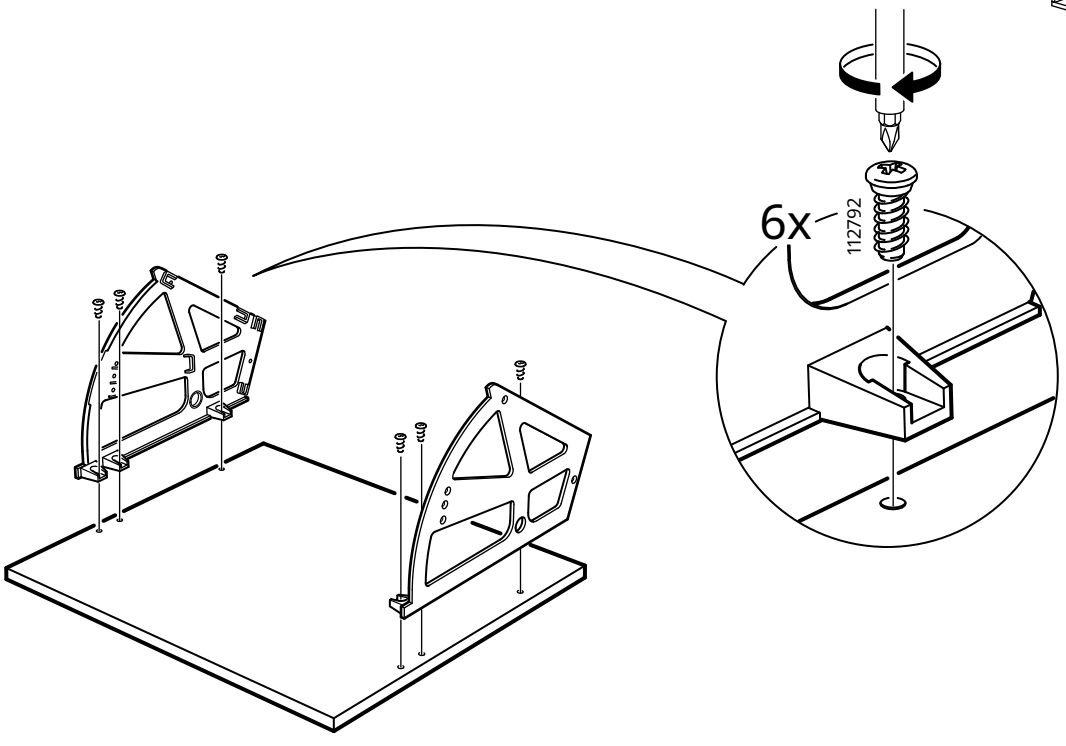

13

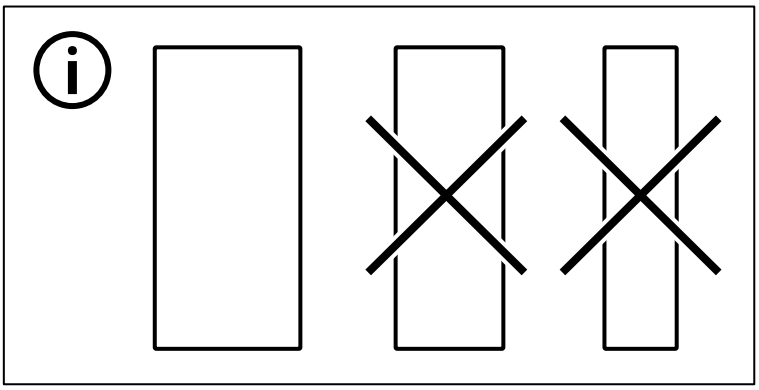

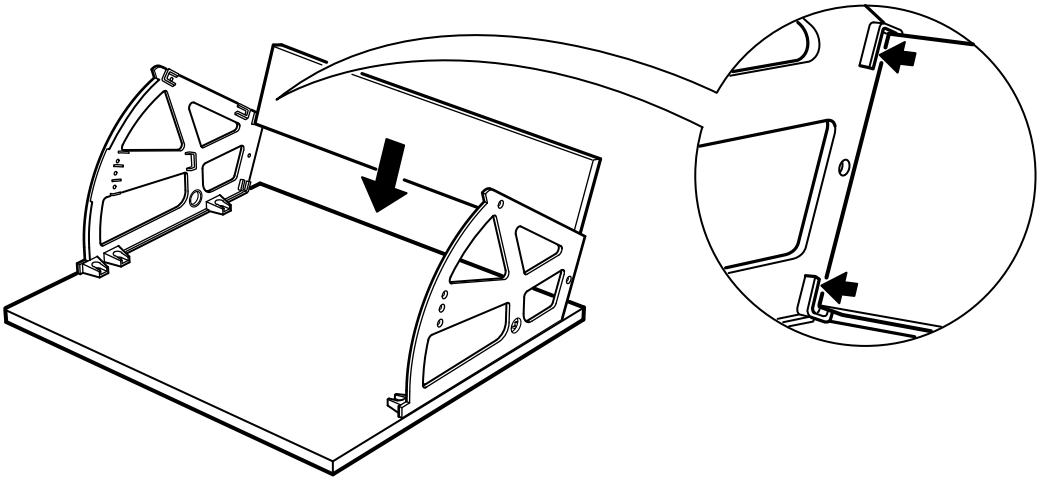

14

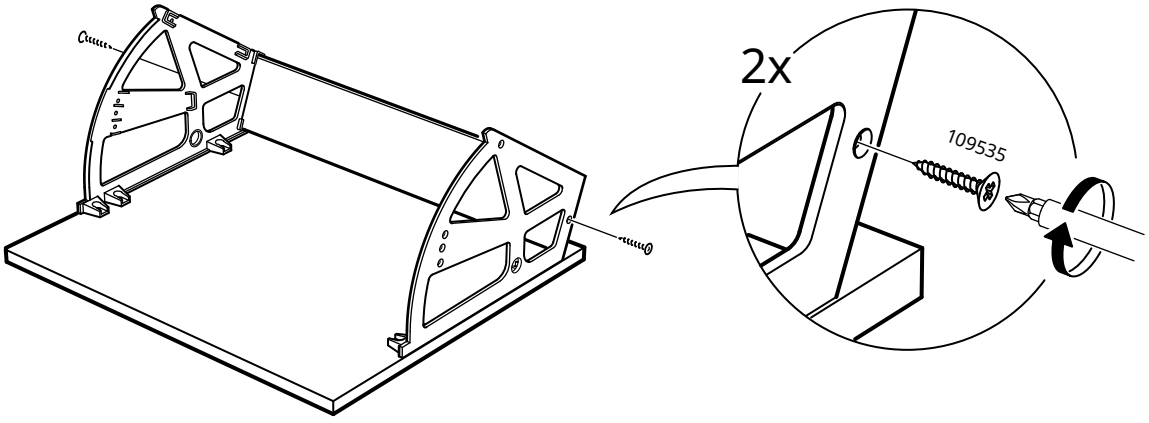

15

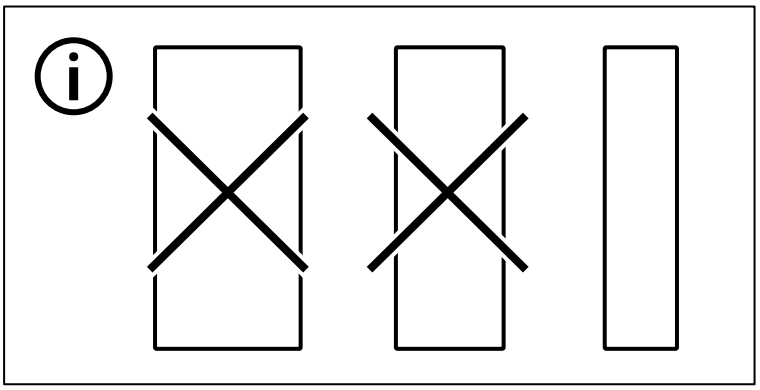

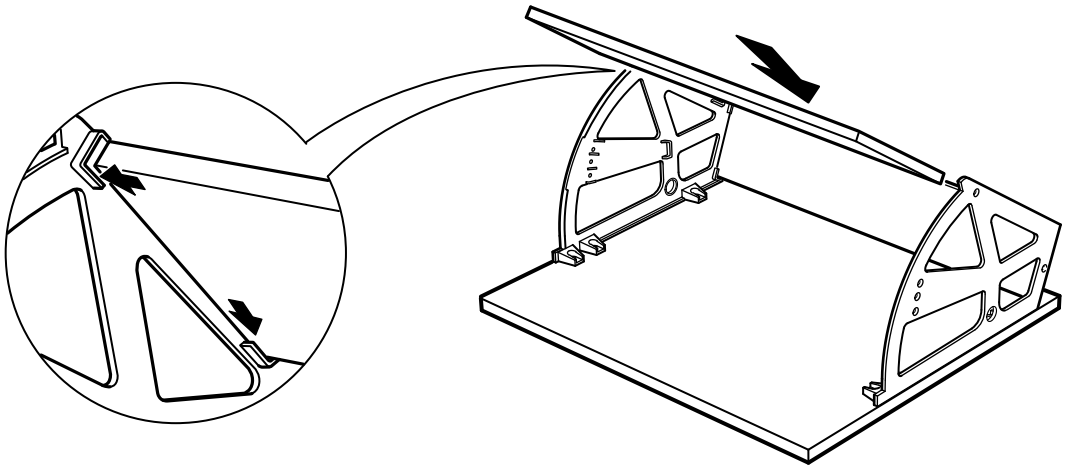

16

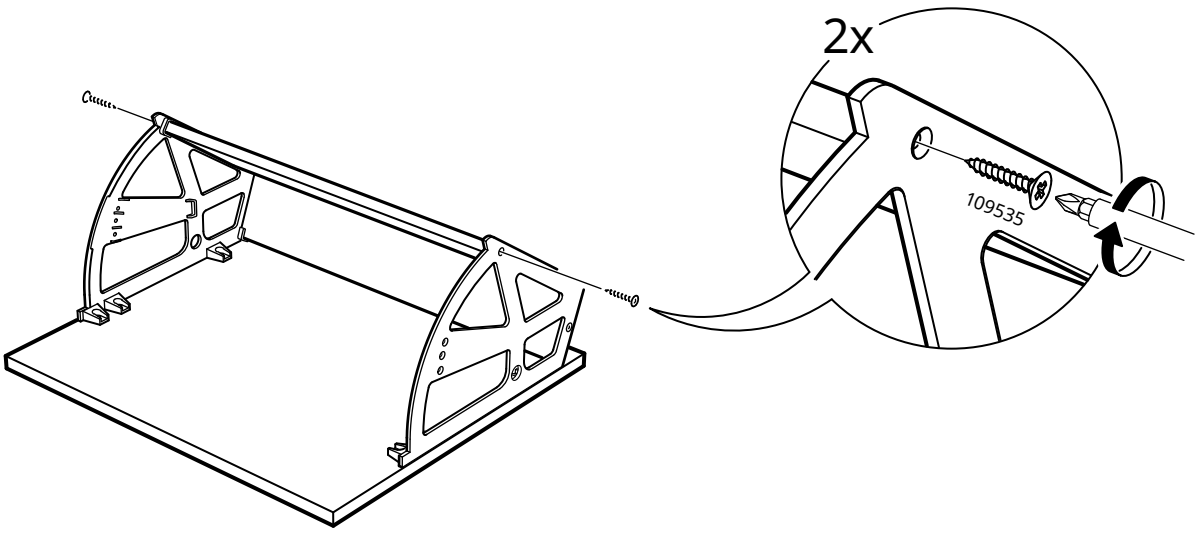

17

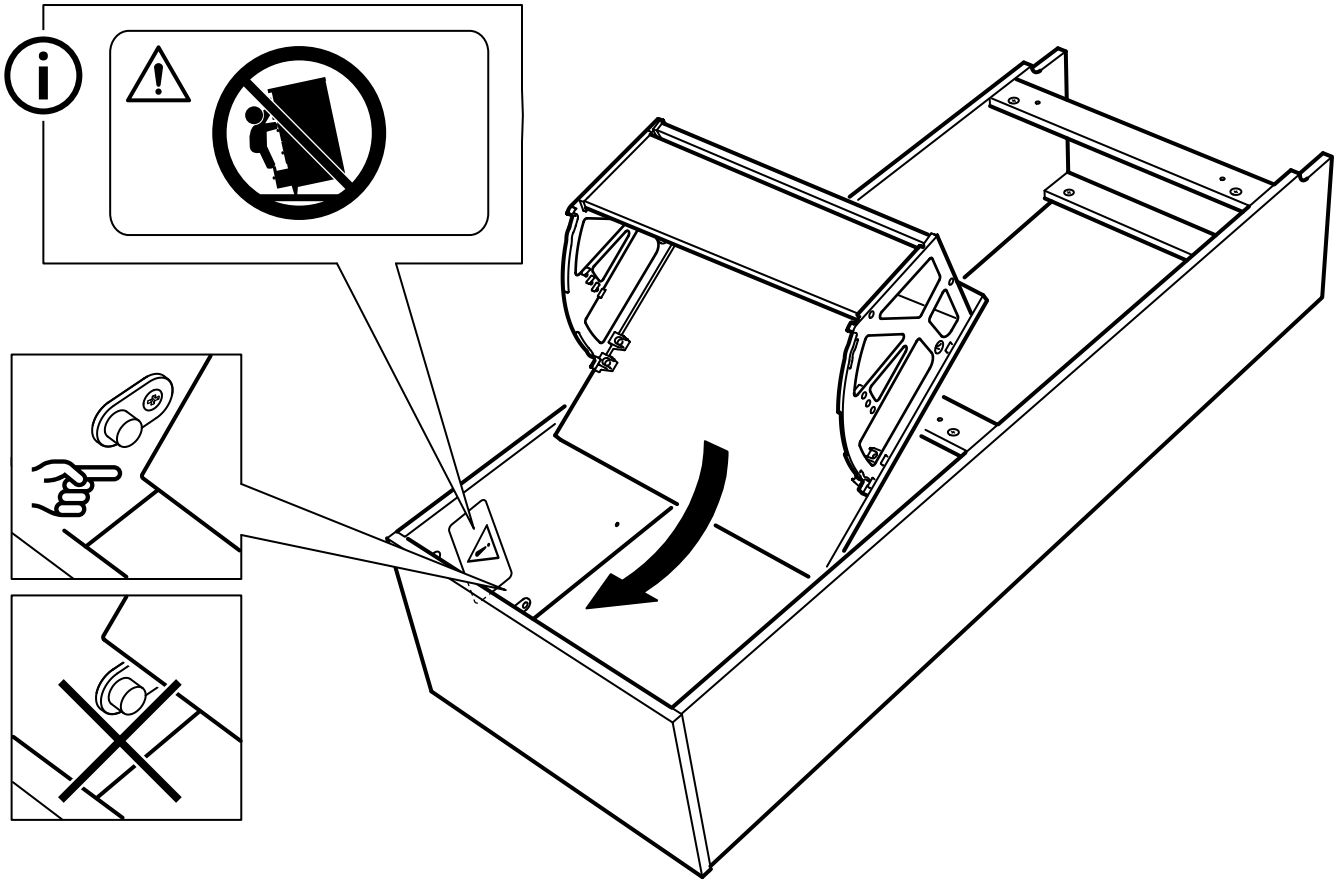

18

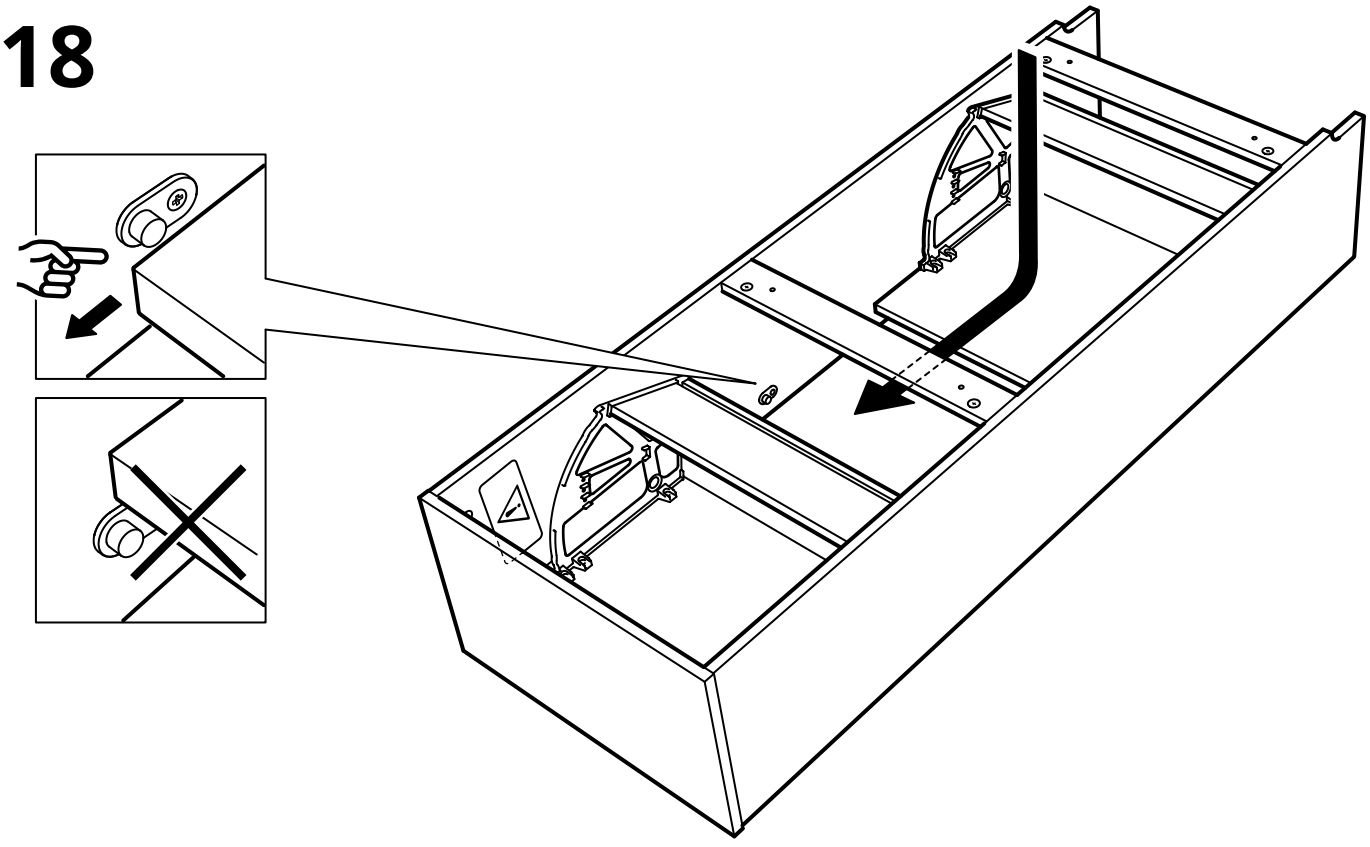

19

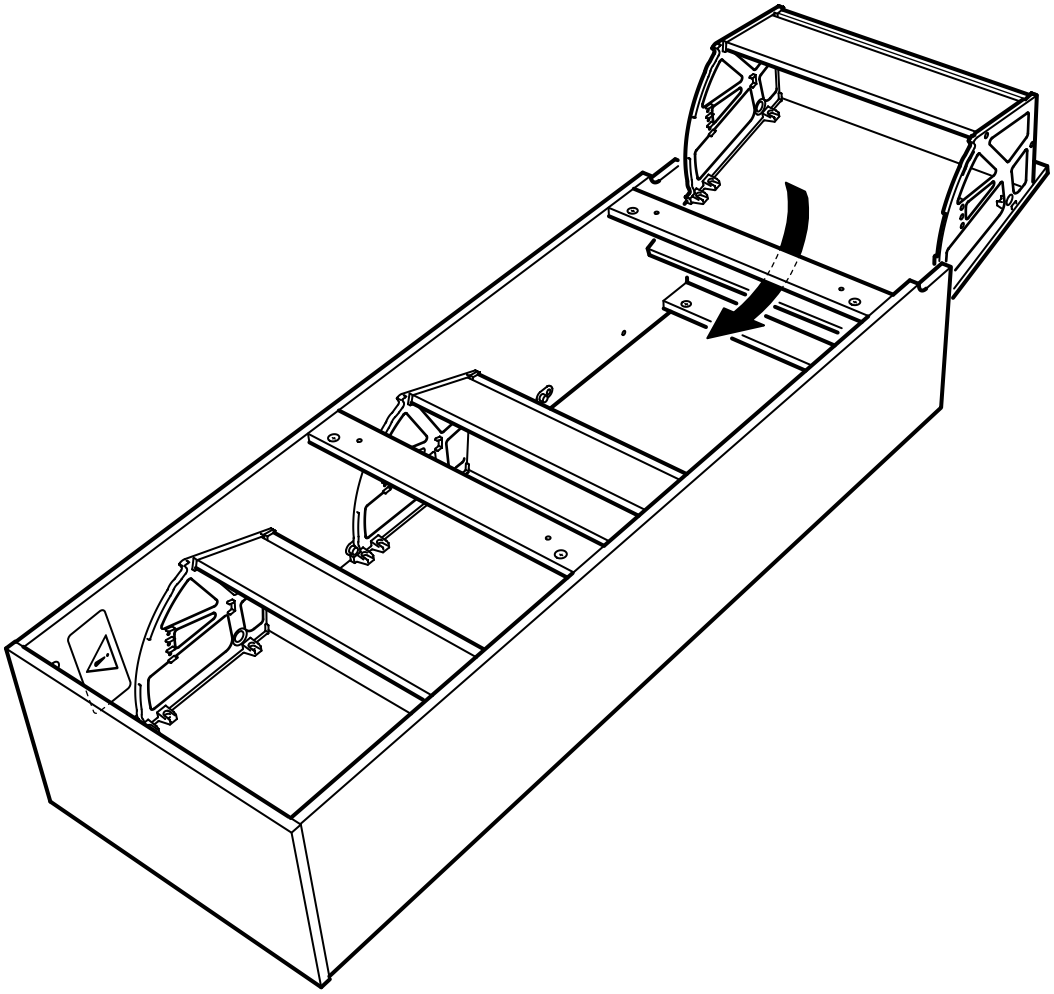

20

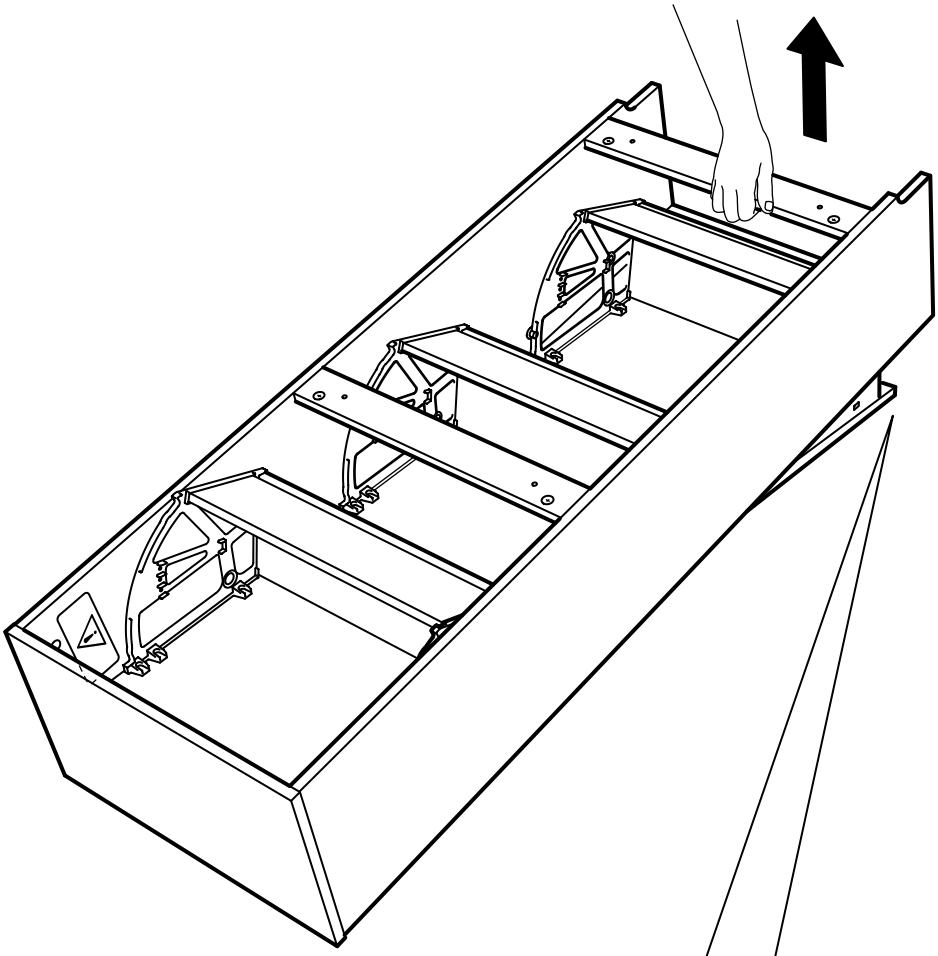

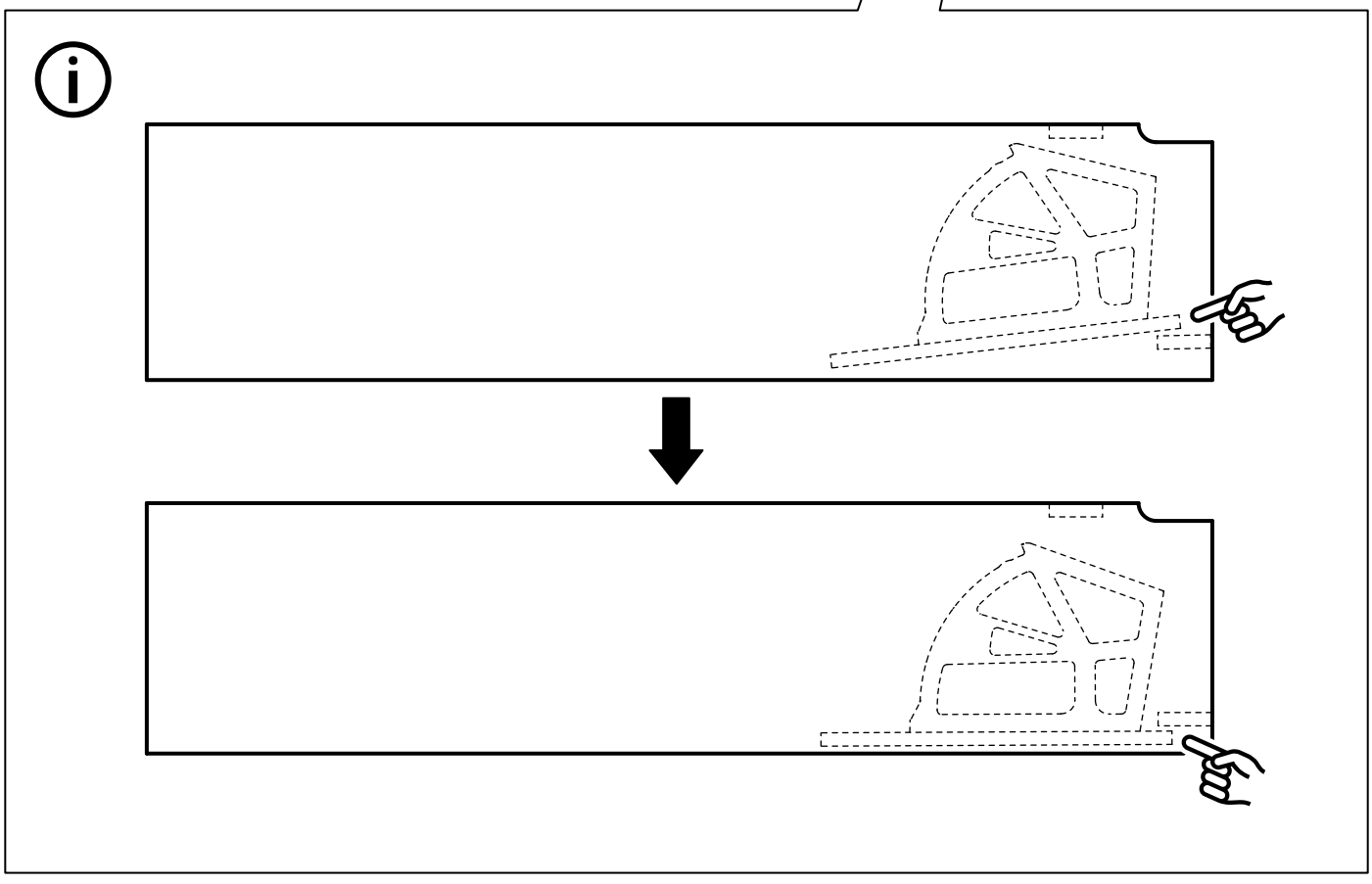

21

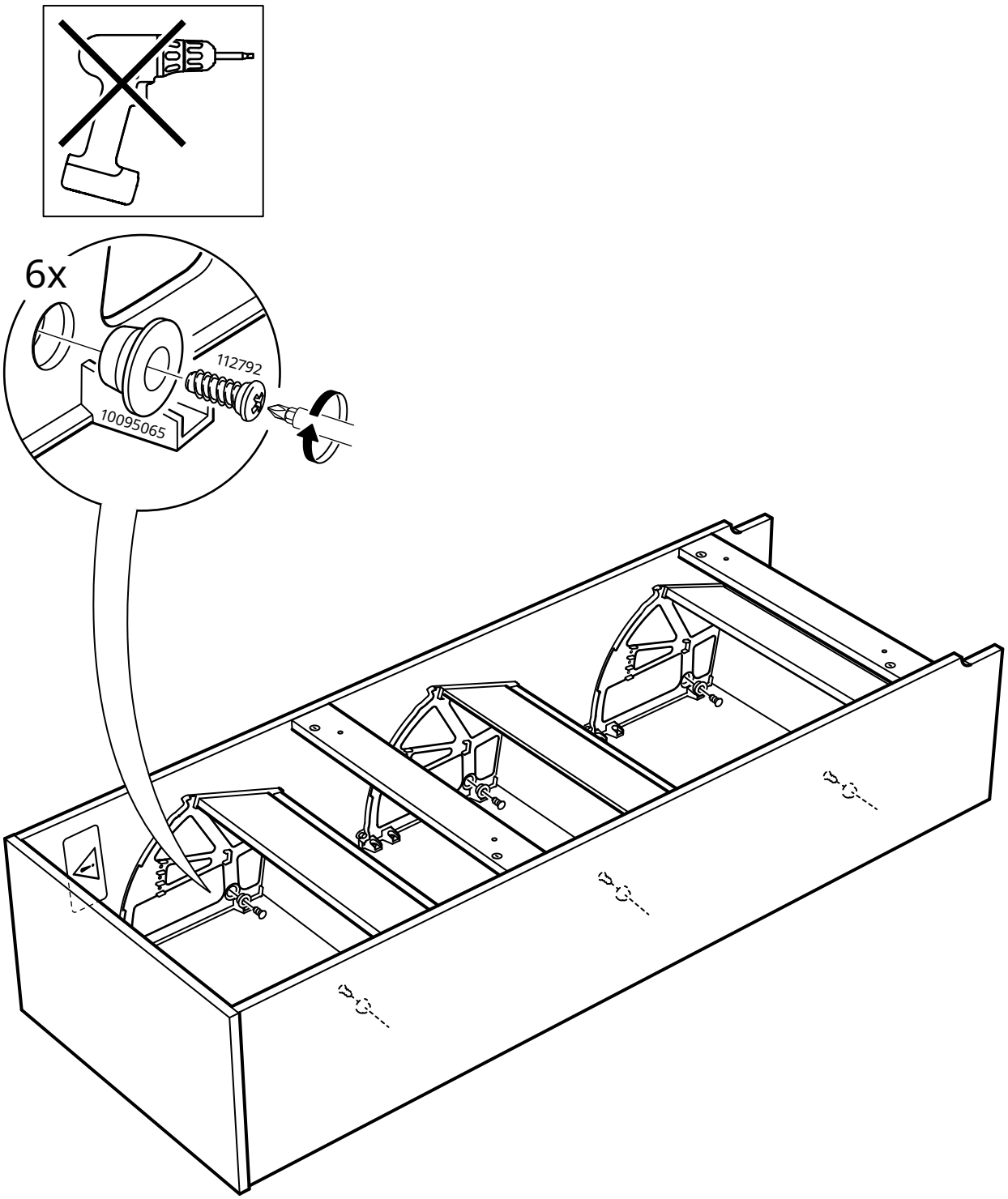



www.IKEA.com/secure-it

www.IKEA.cn/secure-it

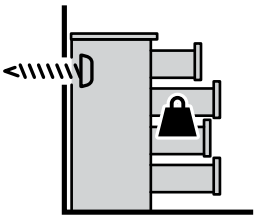

22

English

The screw(s) and plug(s) supplied can be used with most solid (A) and hollow (B) walls. For solid wood (C) use the screw(s) without plug(s). If you are uncertain, seek professional advice.

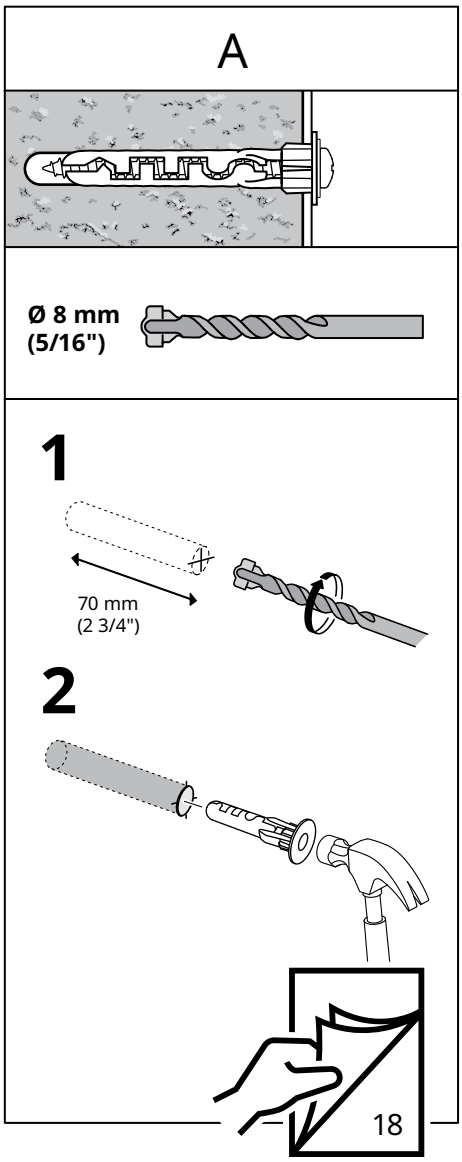

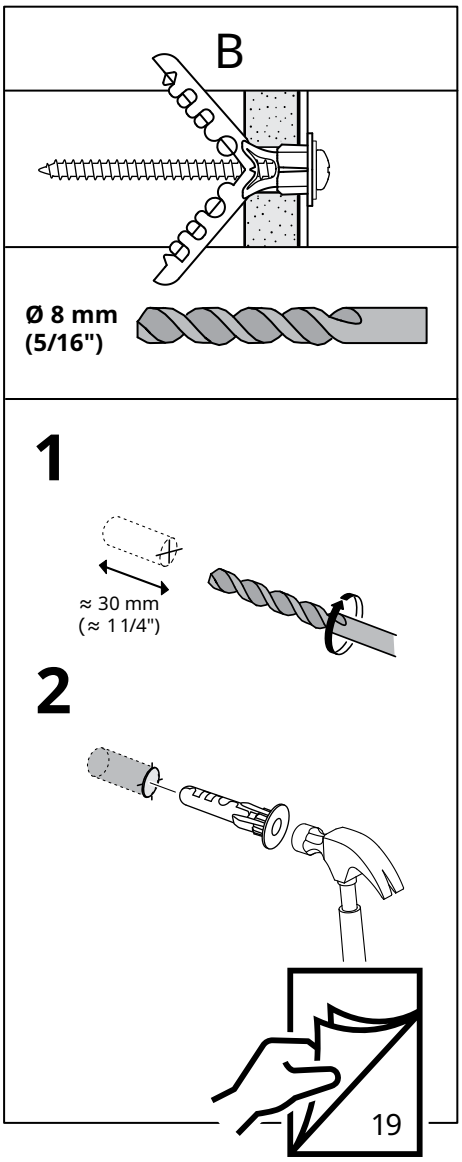

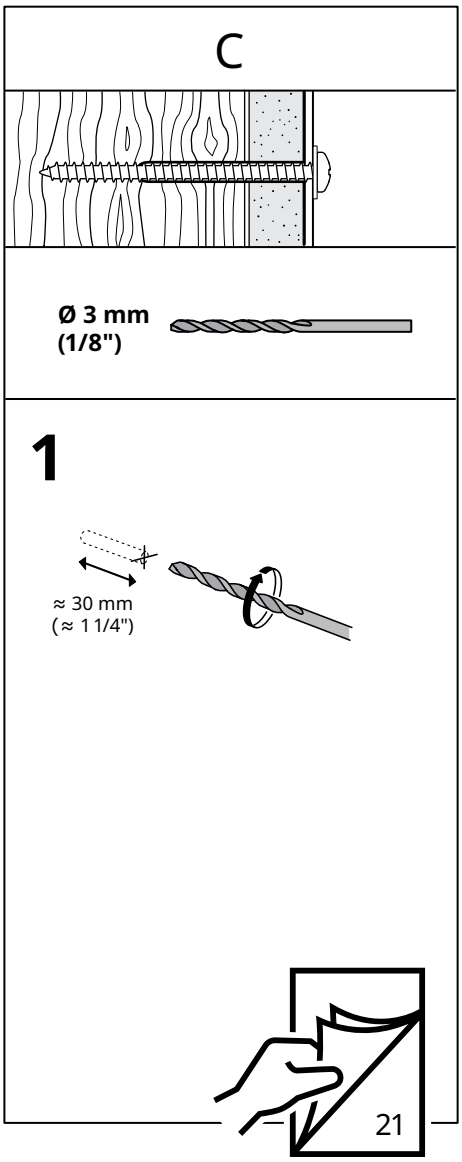

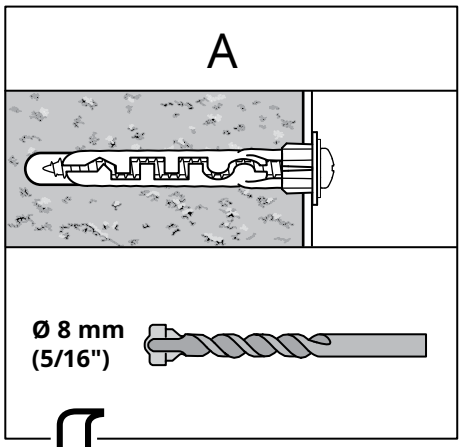

23

x

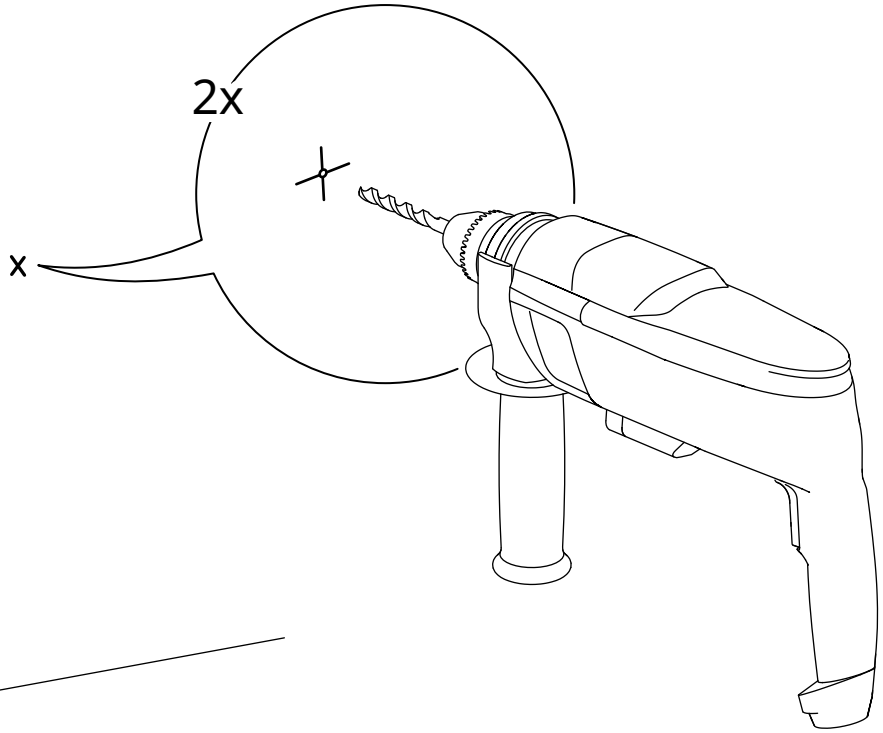

24

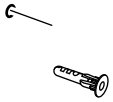

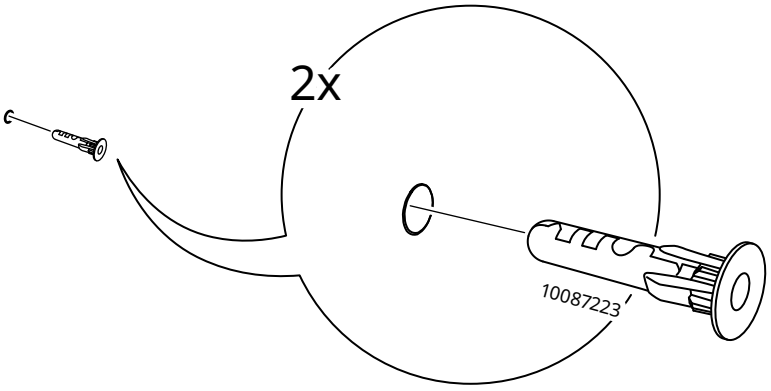

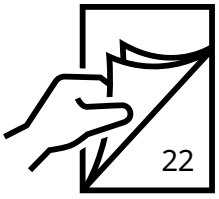

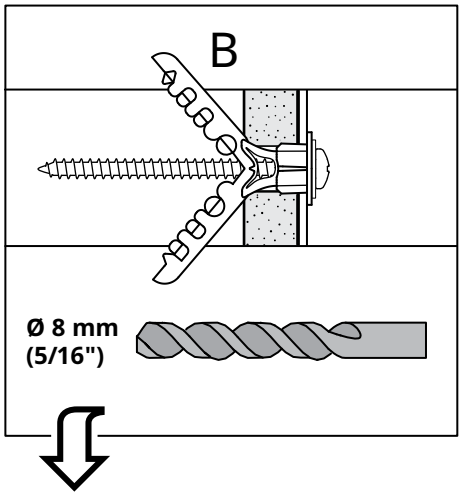

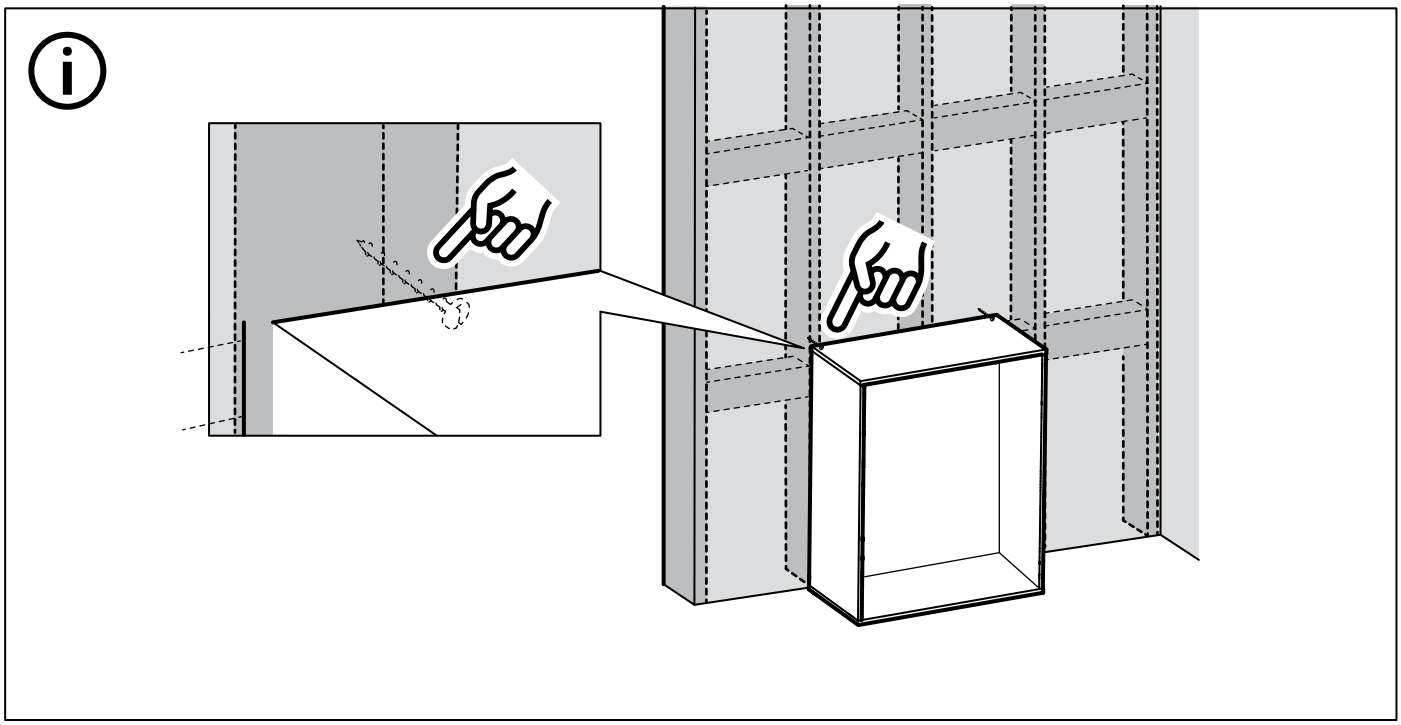

23

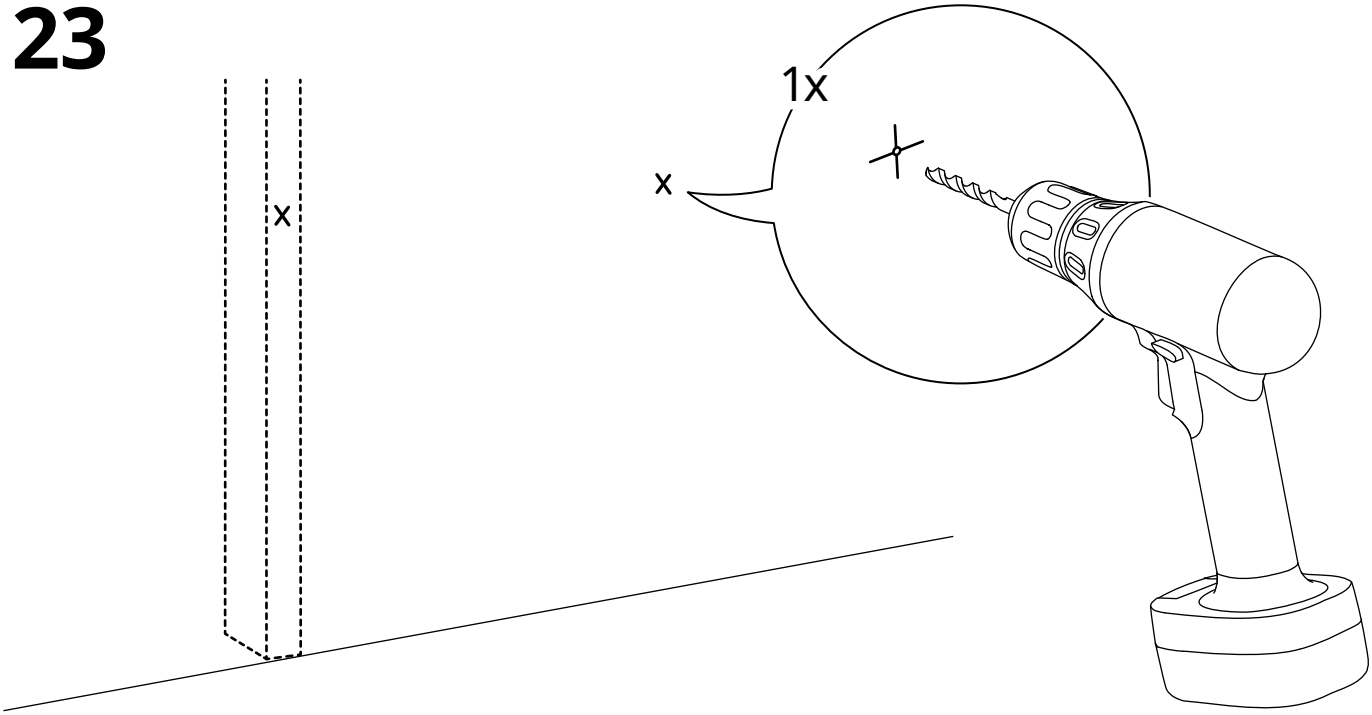

24

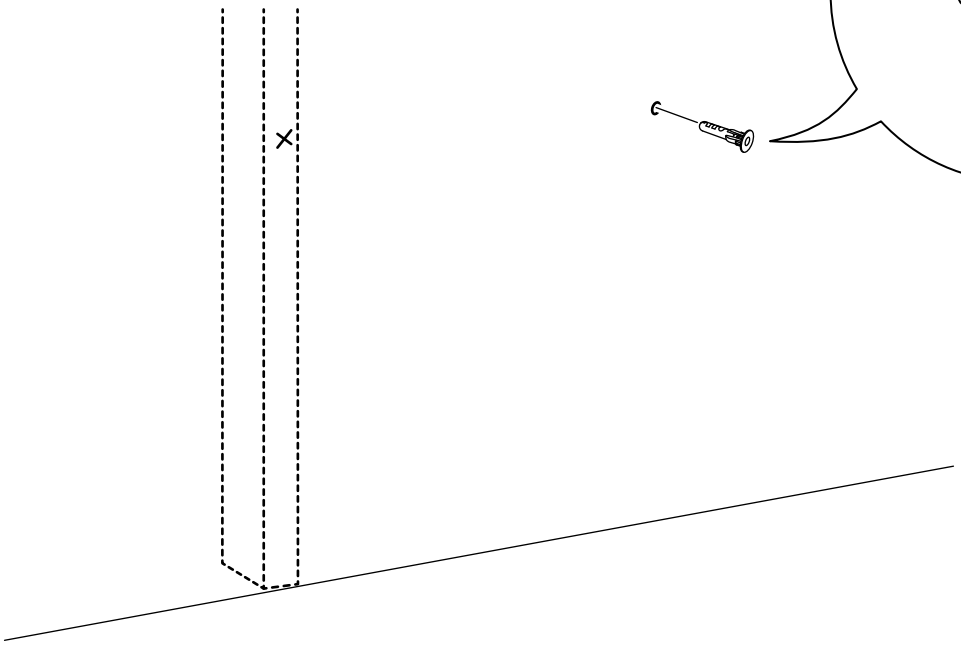

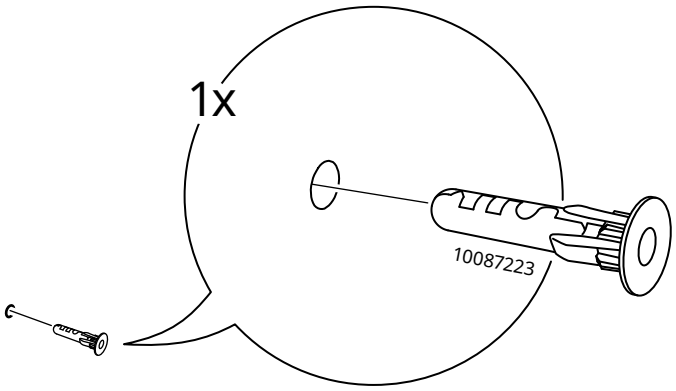

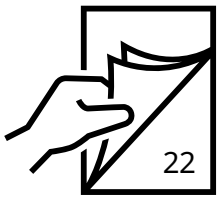

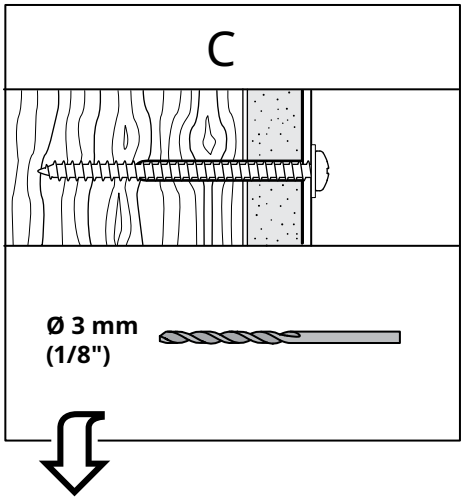

23

x

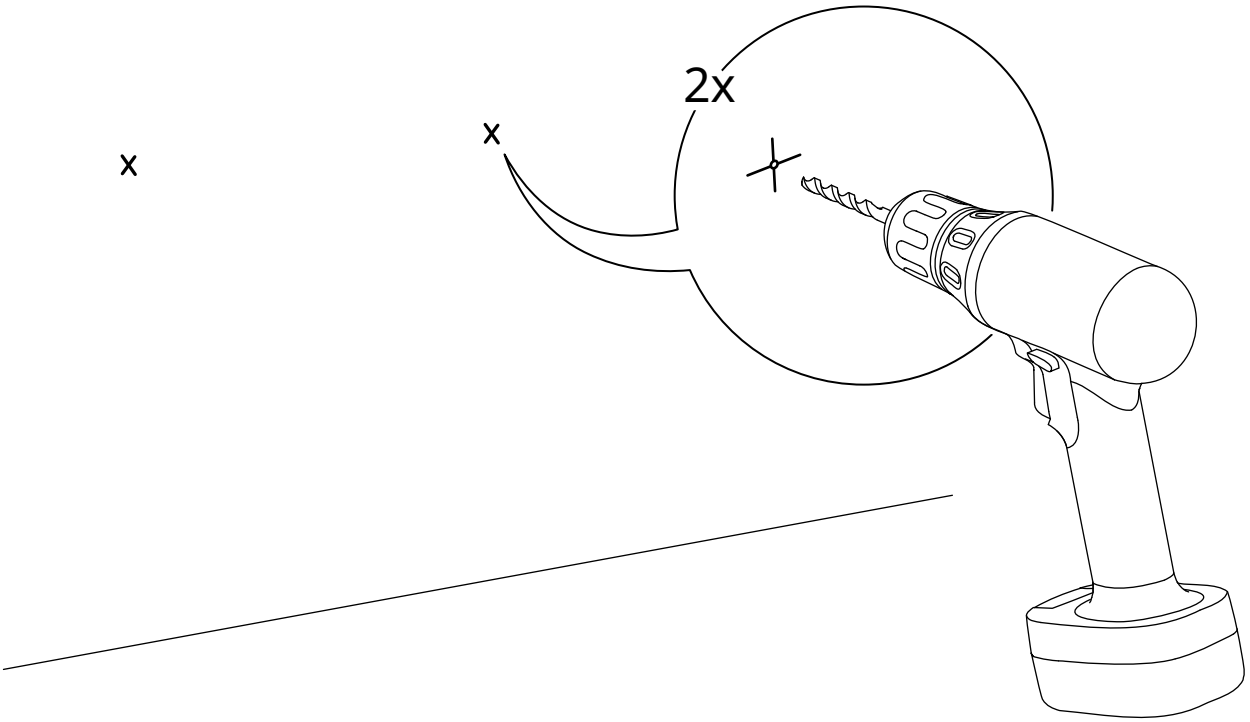

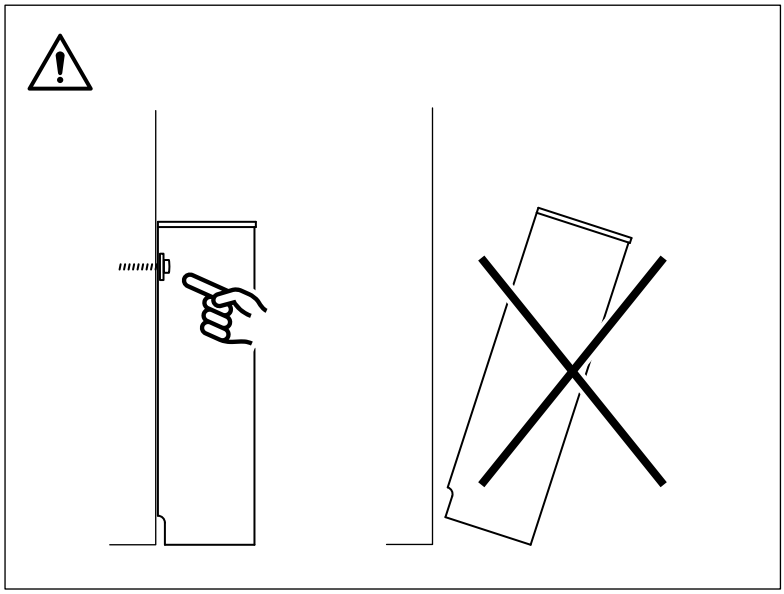

25

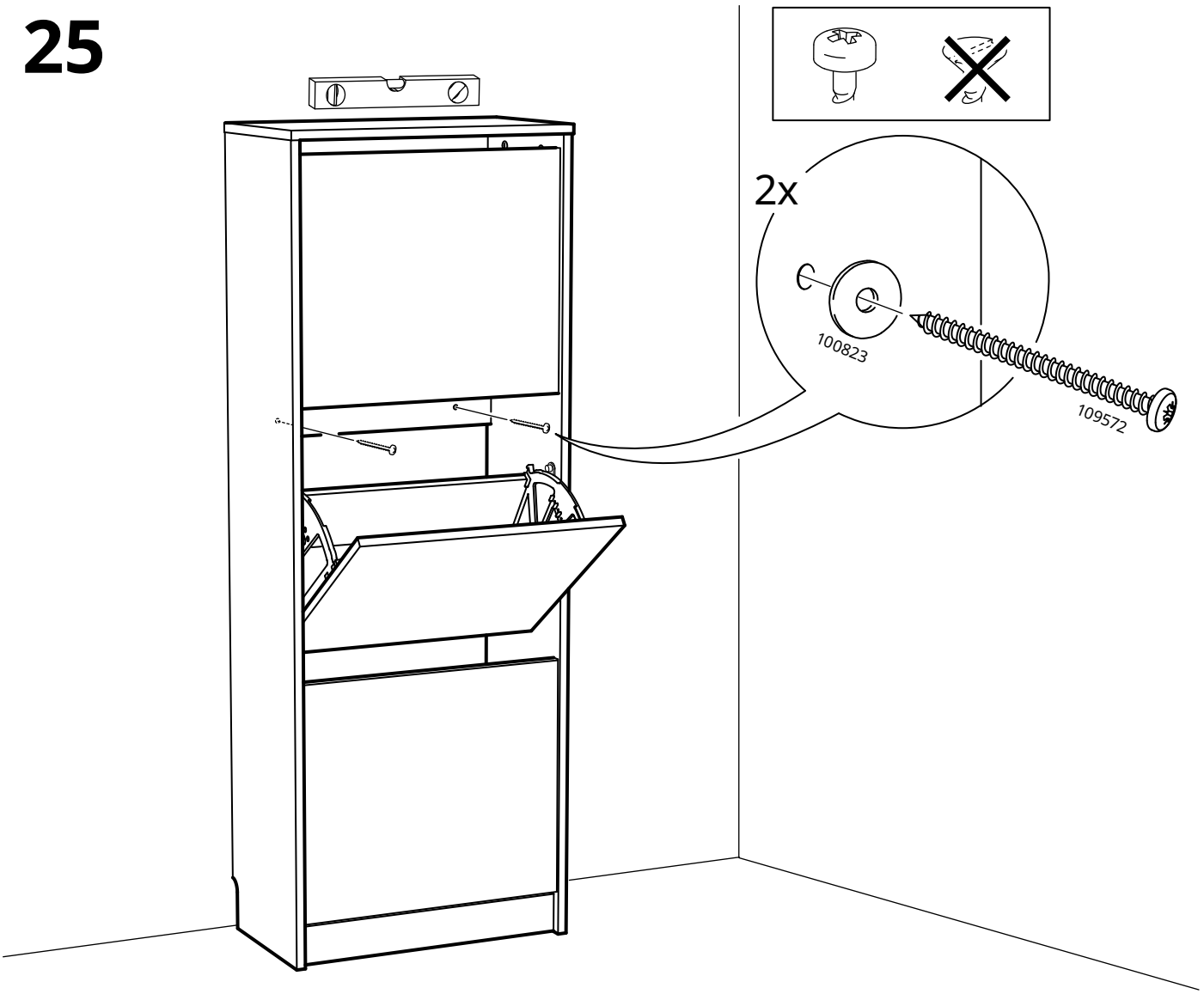

26

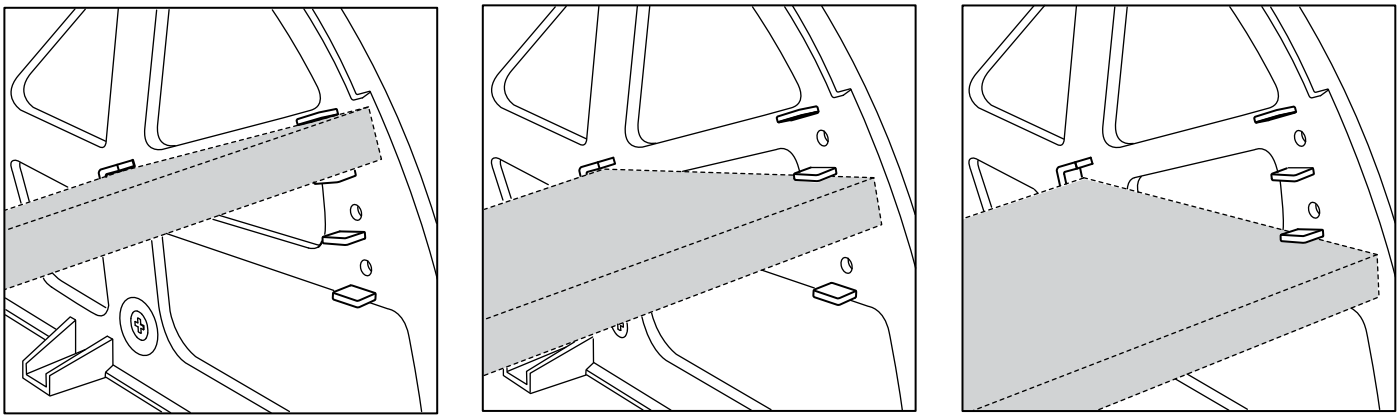

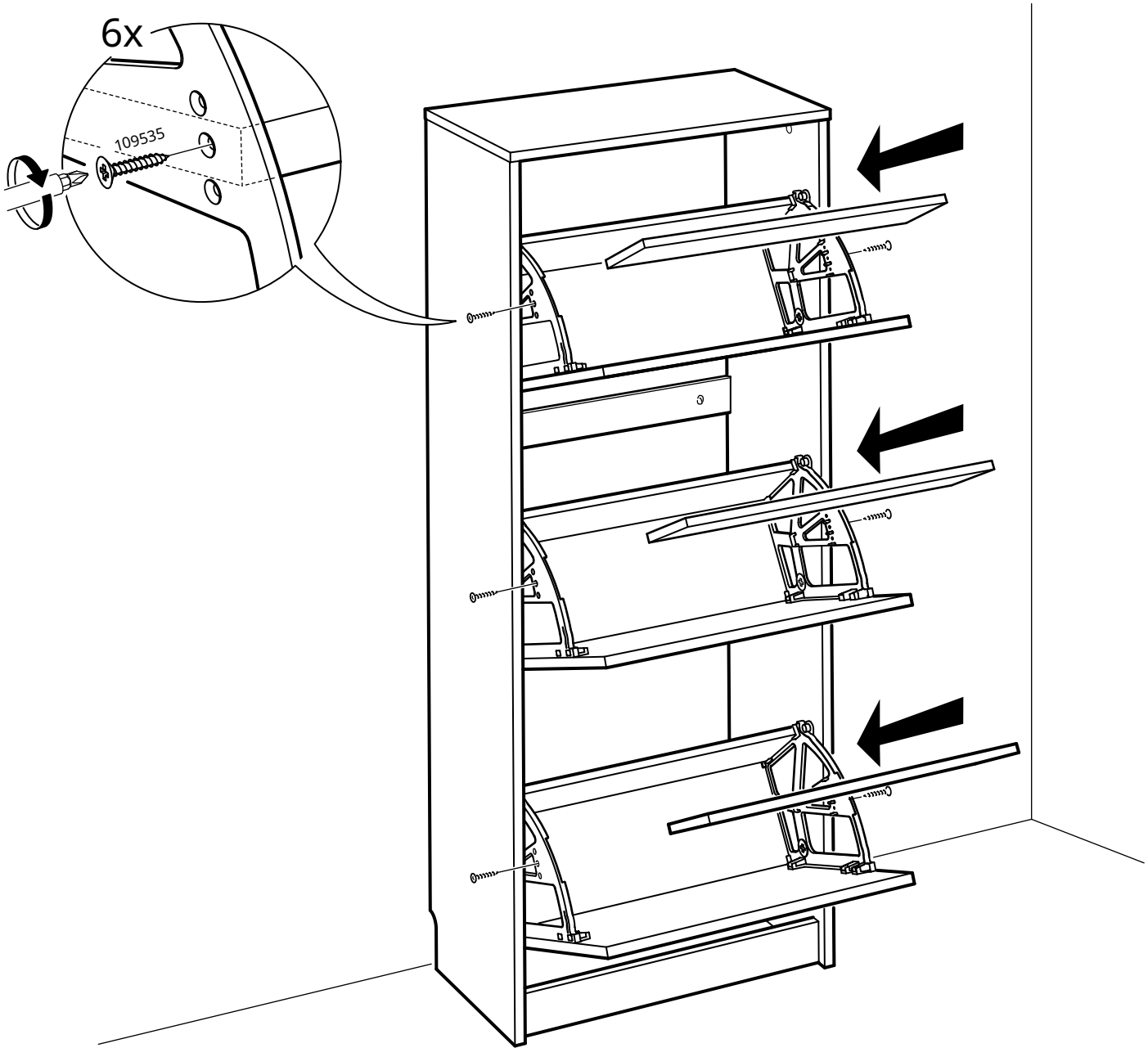

27

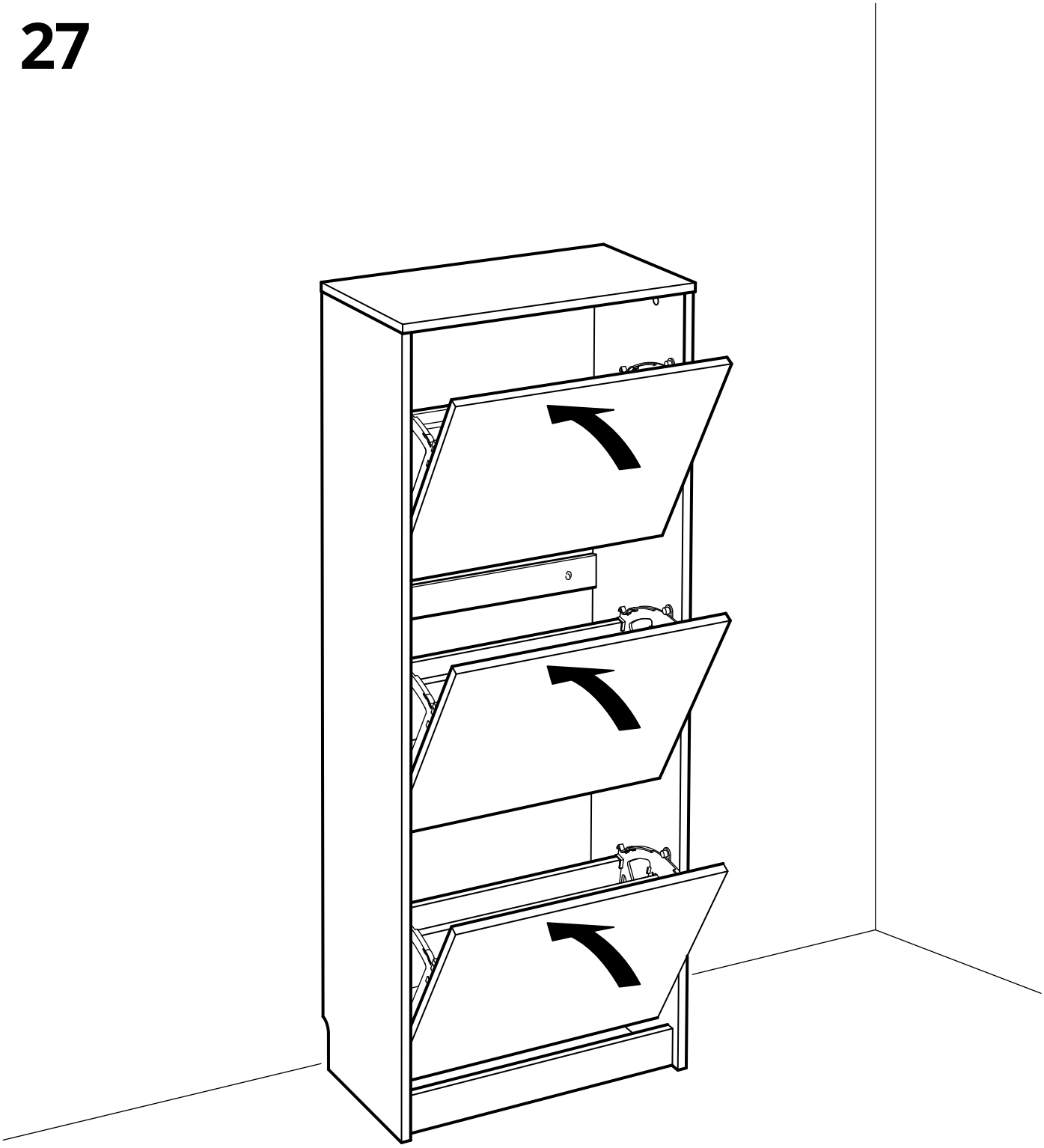

© Inter IKEA Systems B.V. 2024
2026-11-13 AA-2587031-3