# BISSA

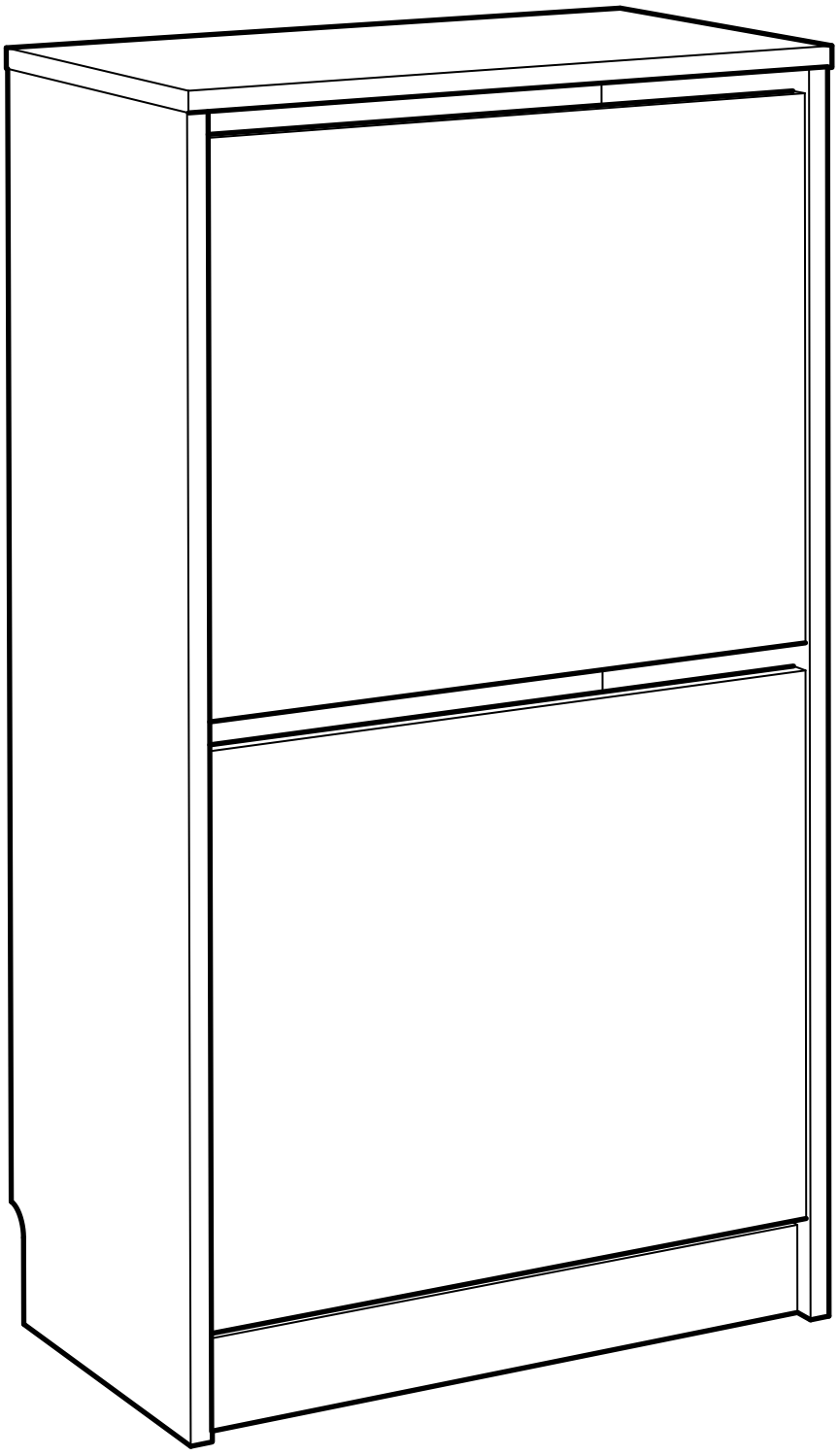

Design and Quality
IKEA of Sweden

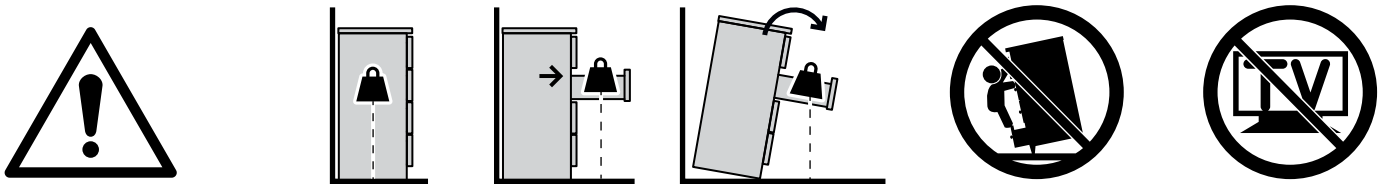

**English**

# WARNING!

**Children have died from furniture tipover.**

**To reduce the risk of furniture tipover:**

ALWAYS install anti-tip device provided.

NEVER put a TV on this product.

NEVER allow children to stand, climb, or hang on any drawers, doors, or shelves.

NEVER open more than one drawer at a time.

Place heaviest items in the lowest drawers.

Read and follow each step of the instruction carefully.

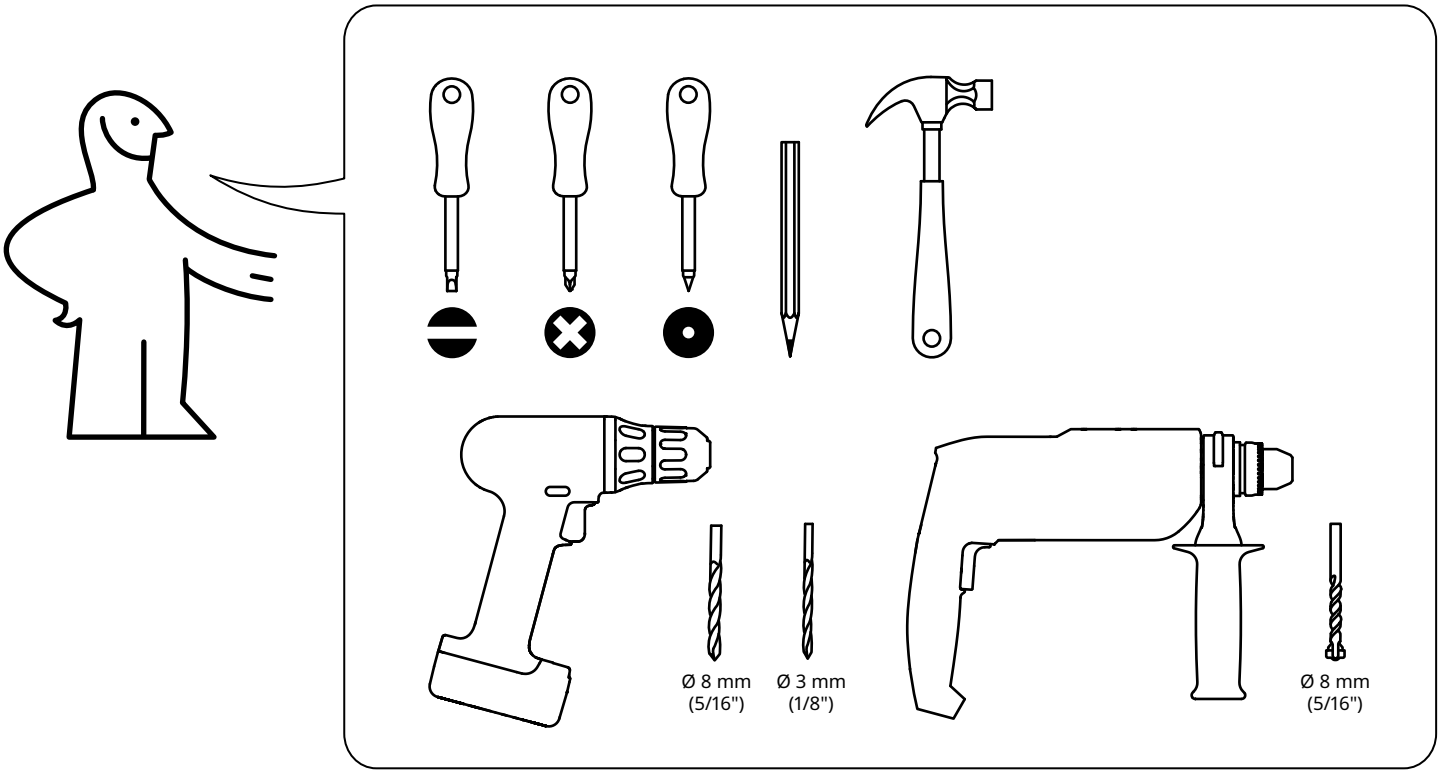


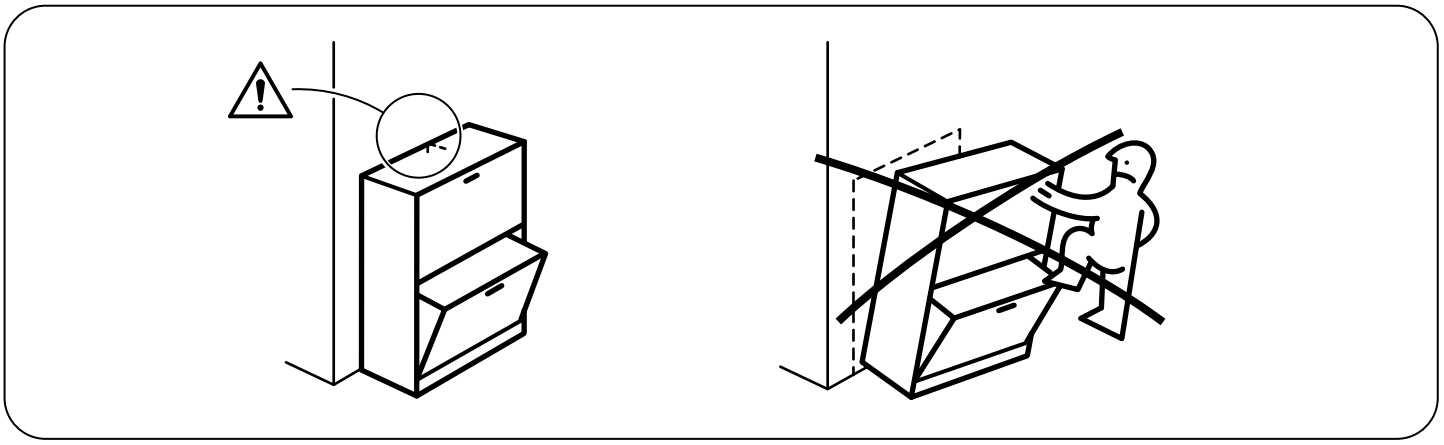

www.IKEA.com/secure-it

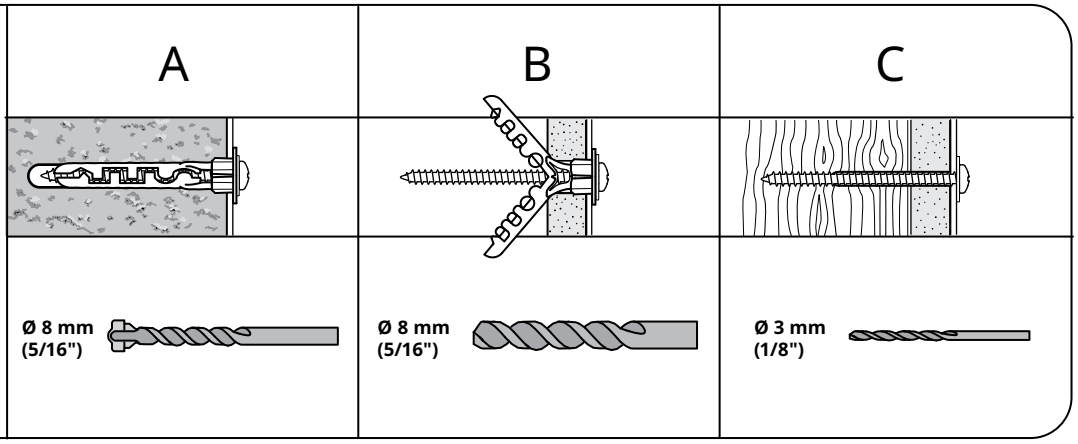

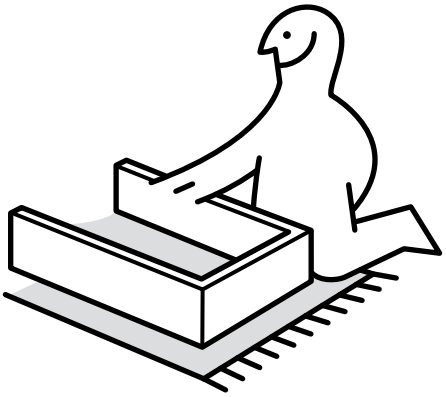

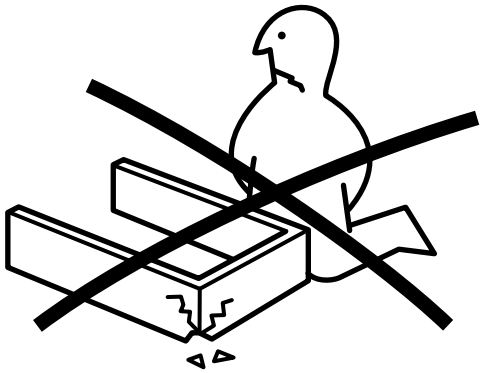

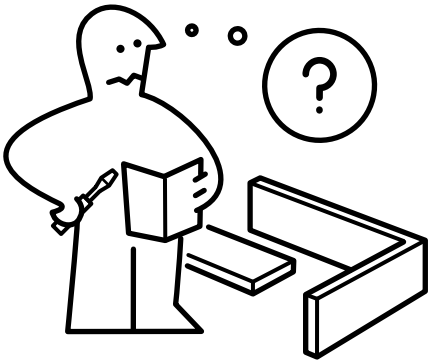

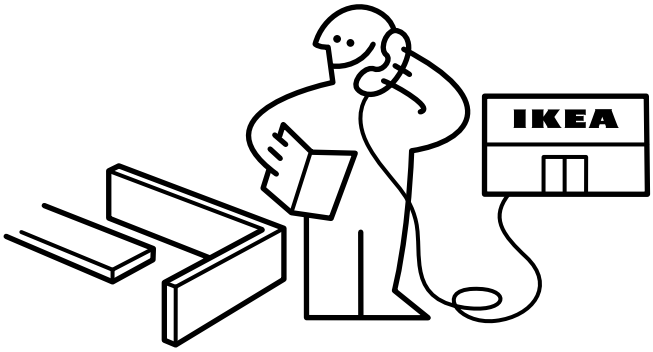


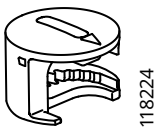


10x

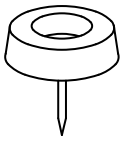


4x




12x

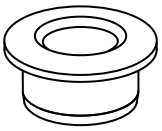


4x

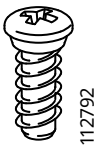


16x




4x

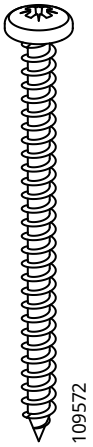


2x

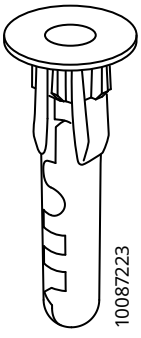


2x




2x

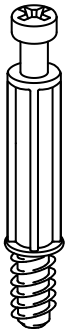


10x

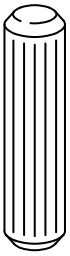


10x

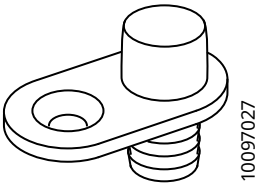


4x

# 1

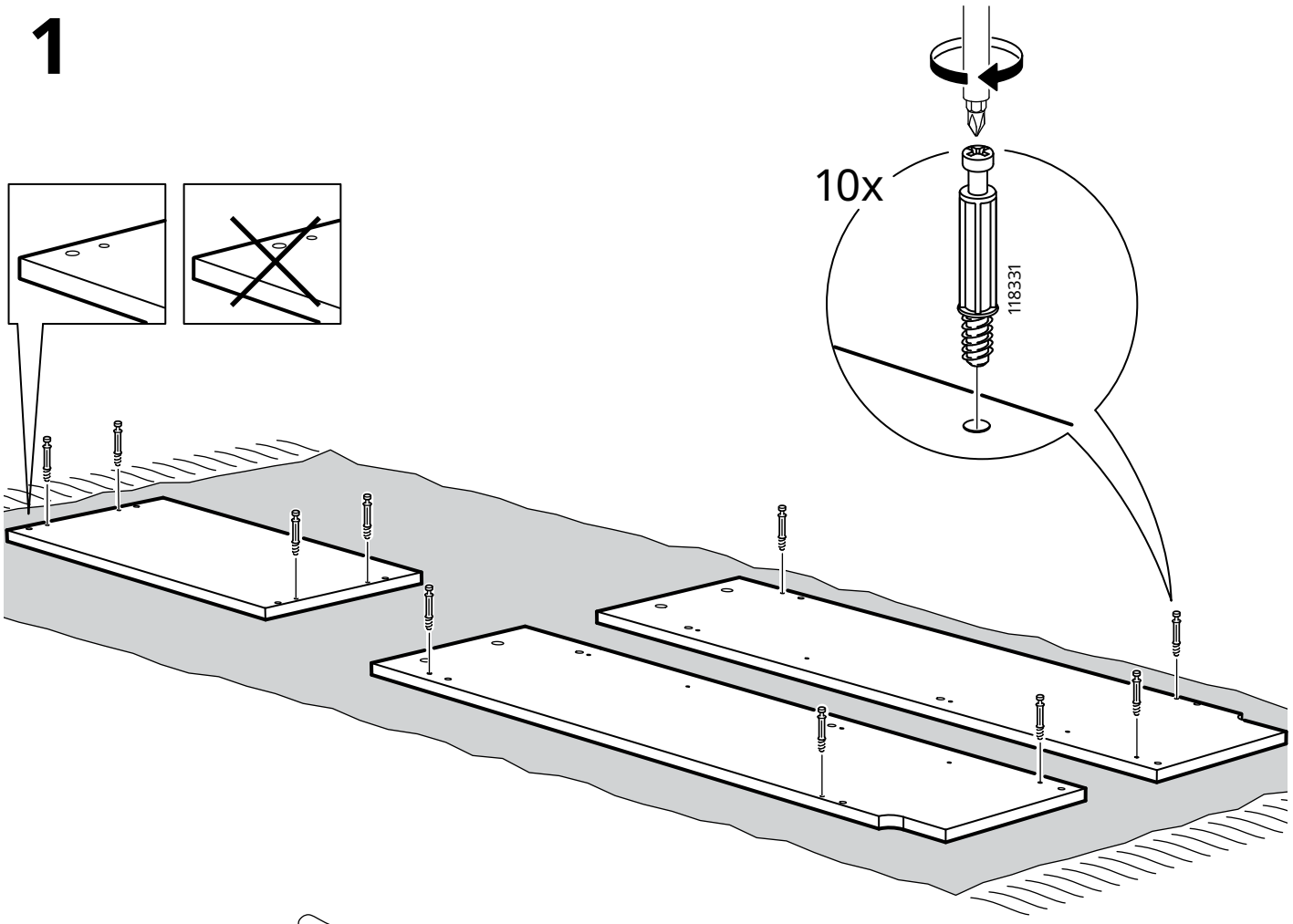


# 2

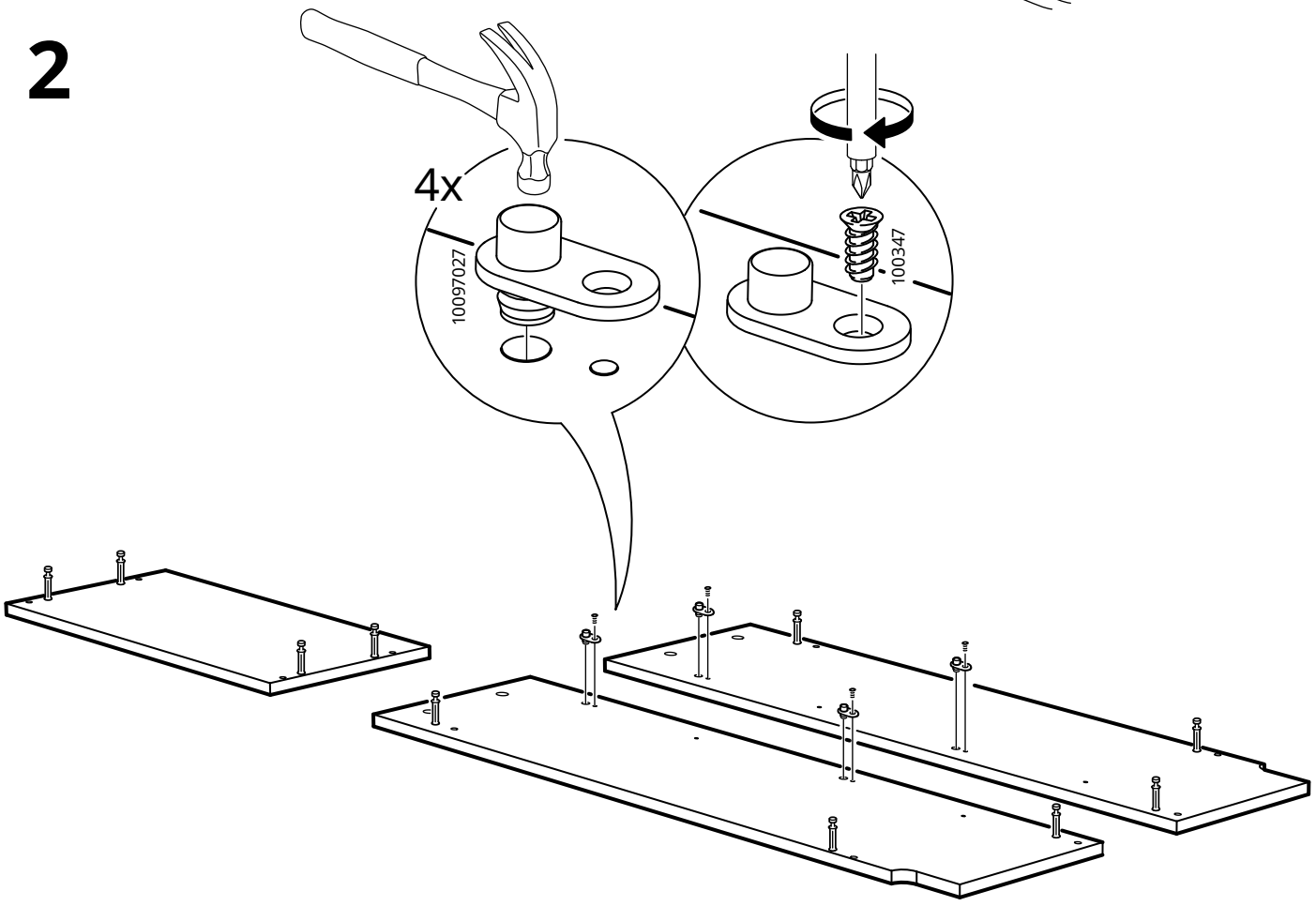

# 3

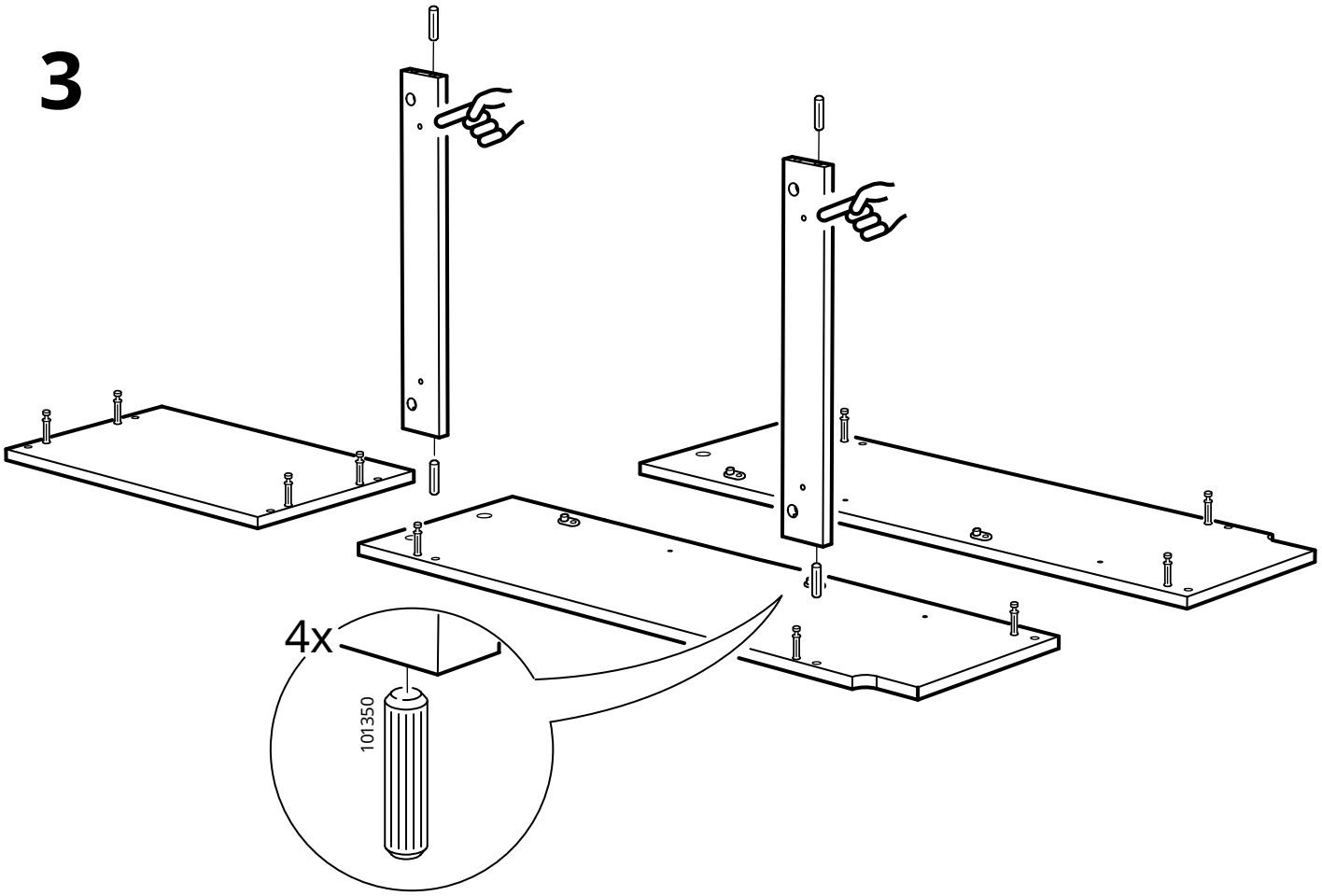


# 4

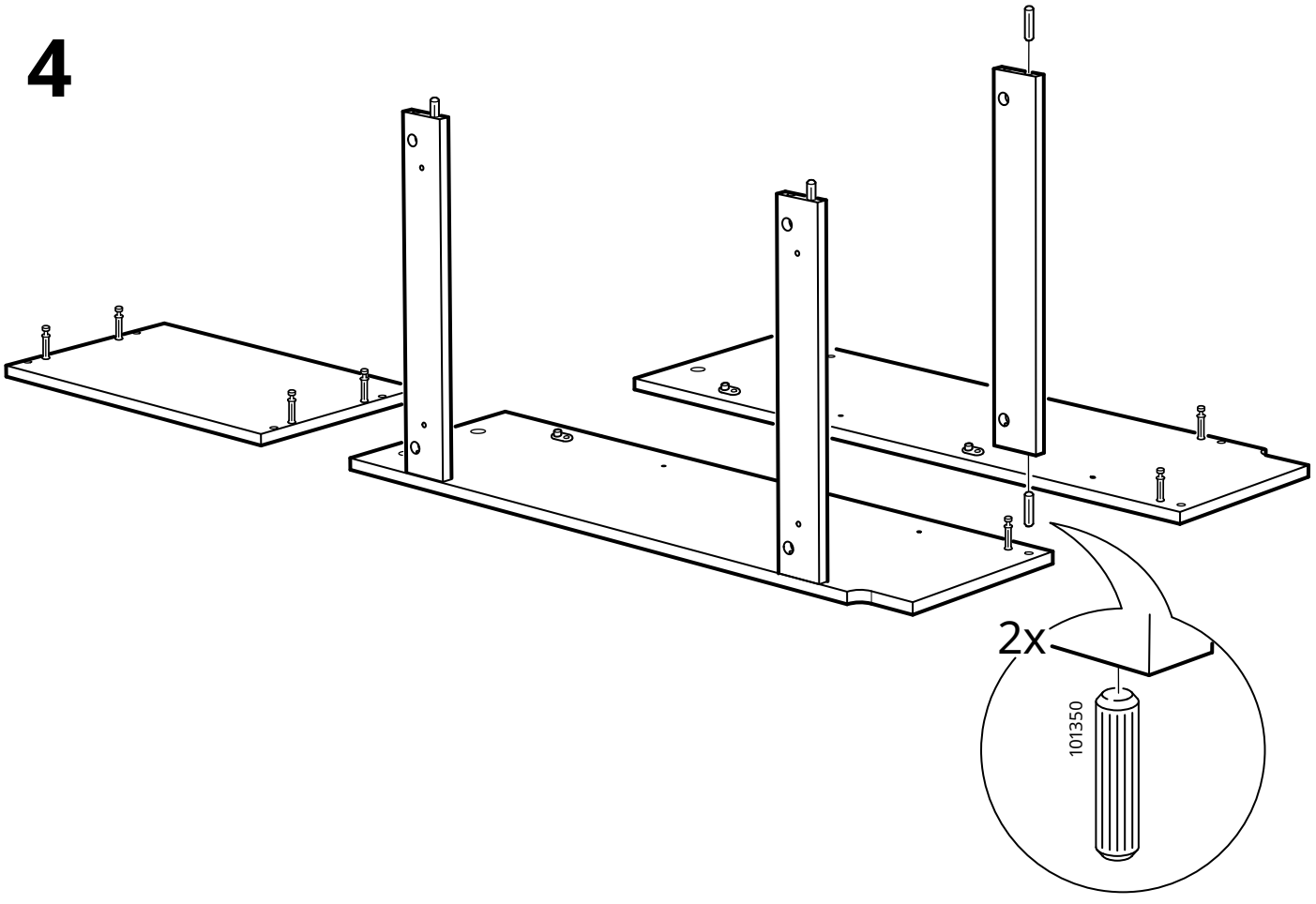

## 5

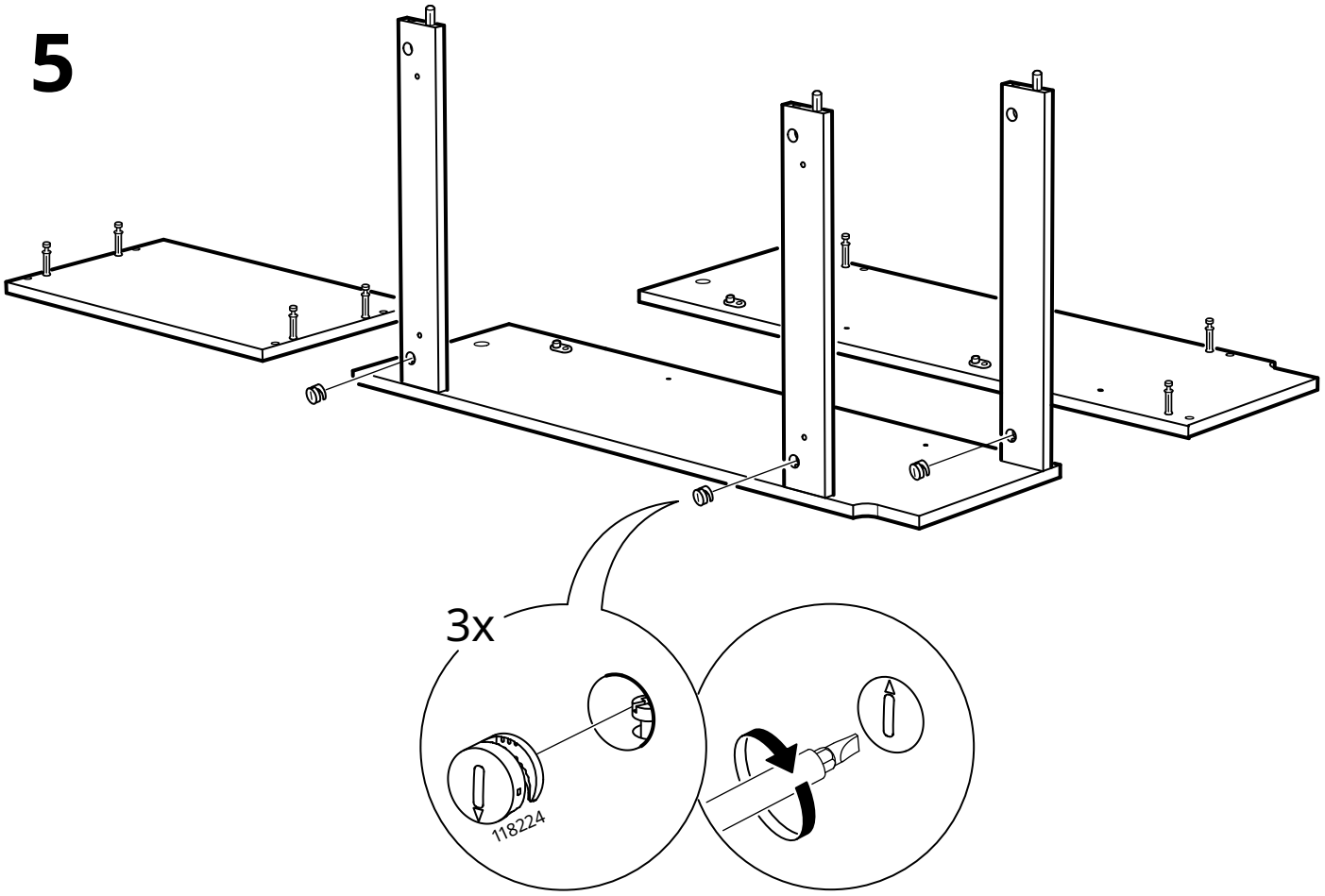


## 6

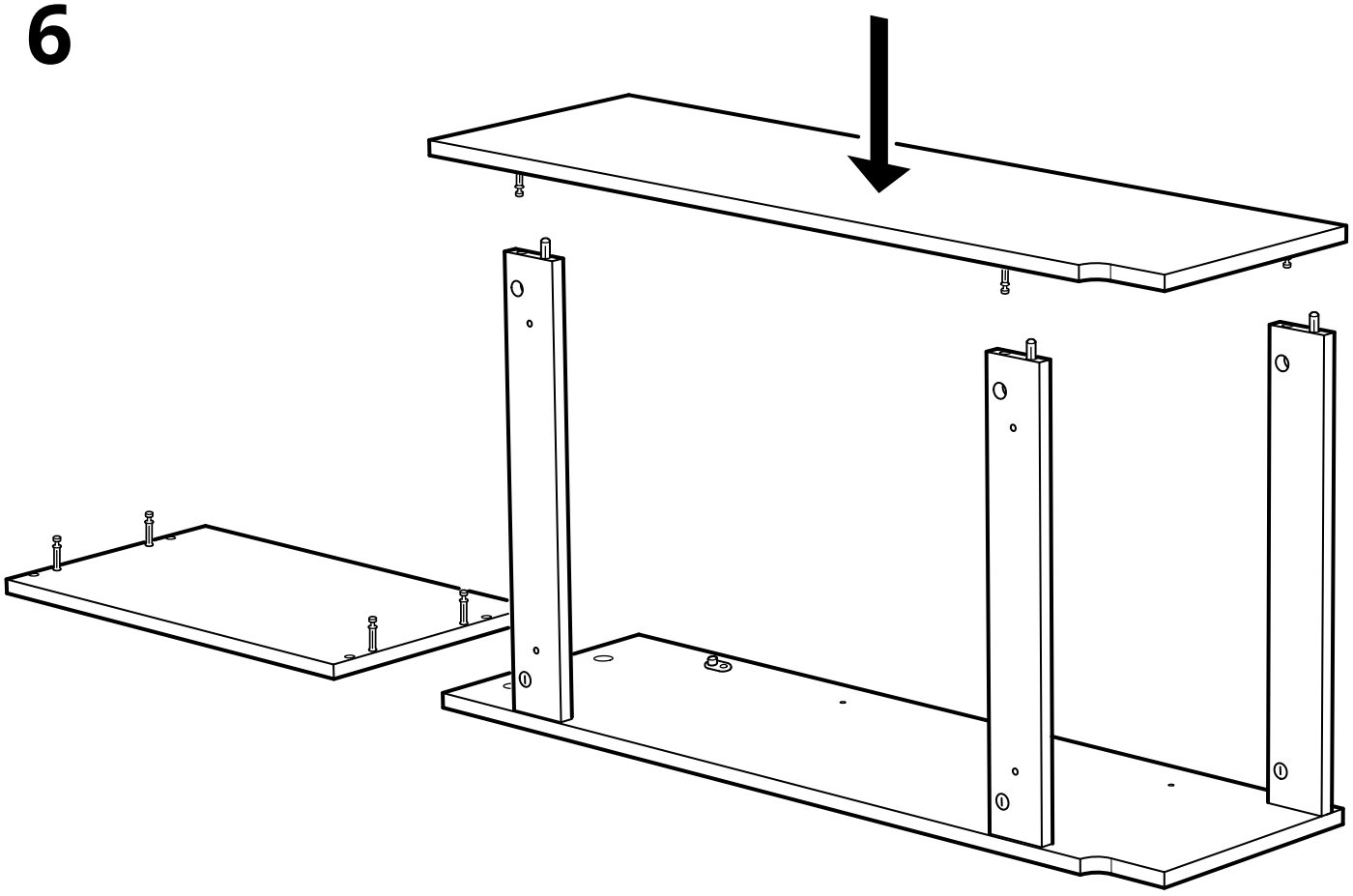

# 7

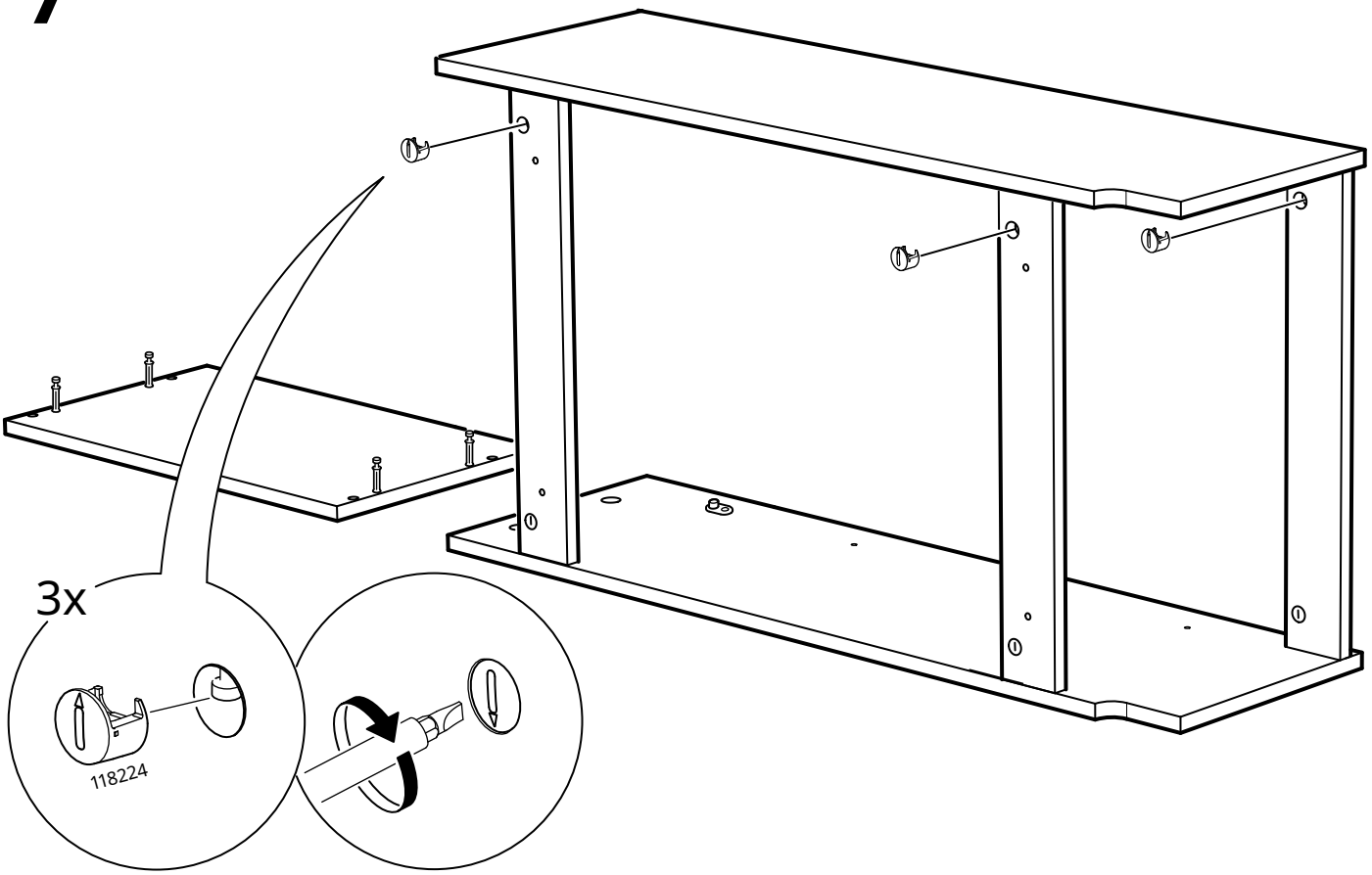


# 8

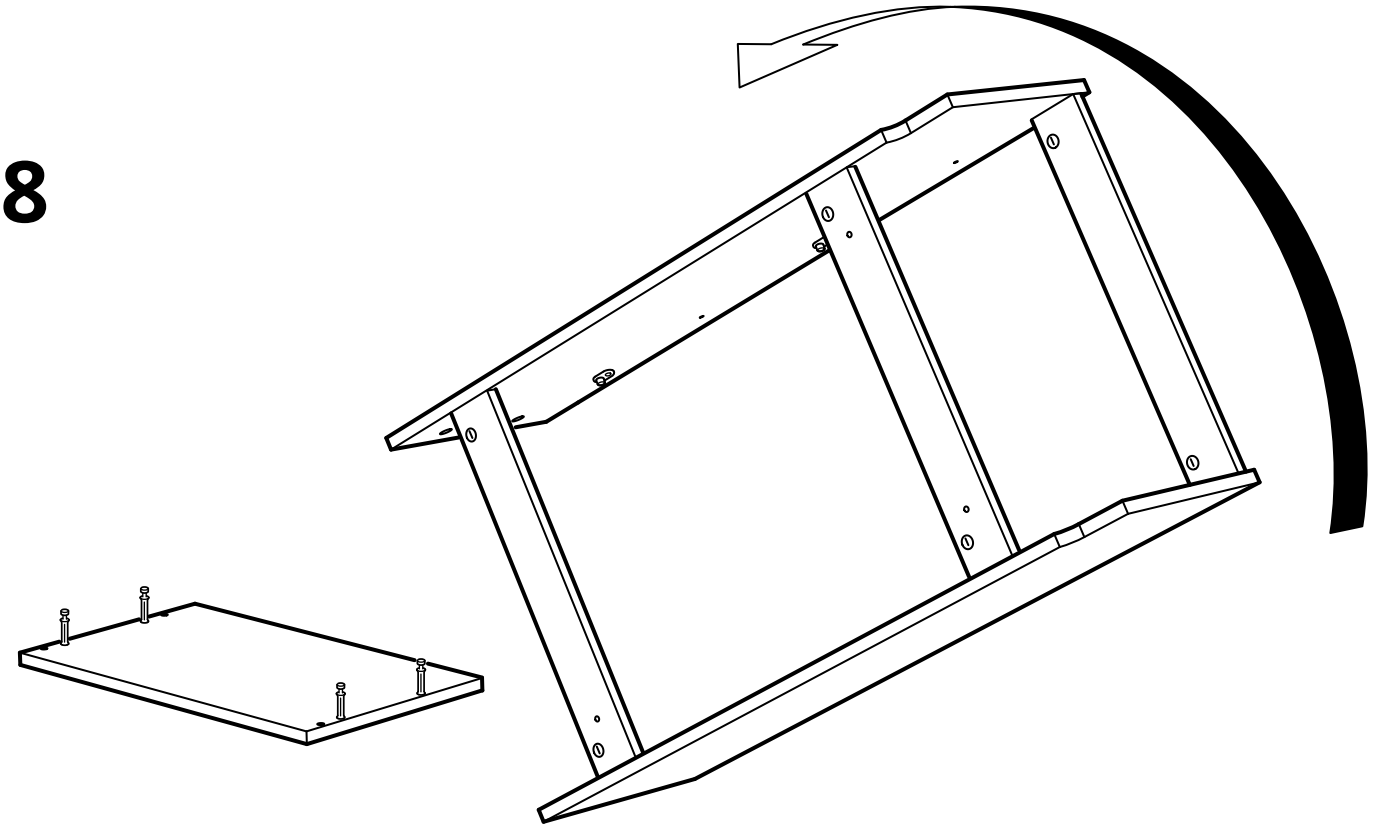

# 9

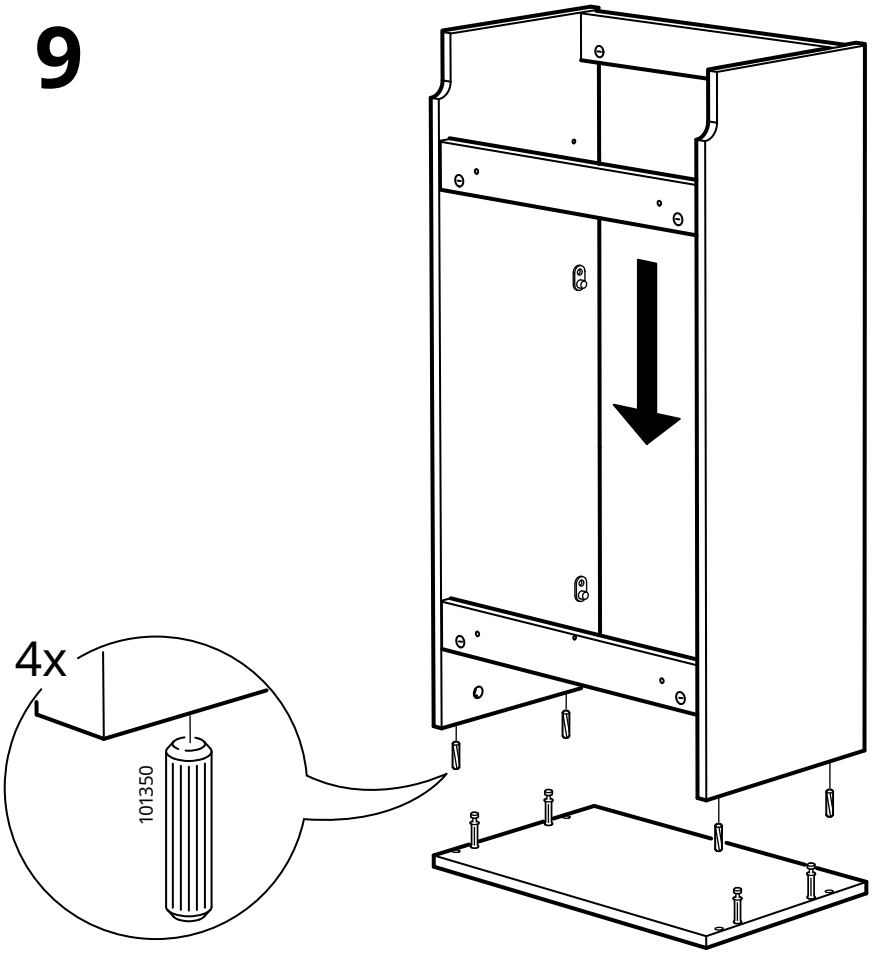


# 10

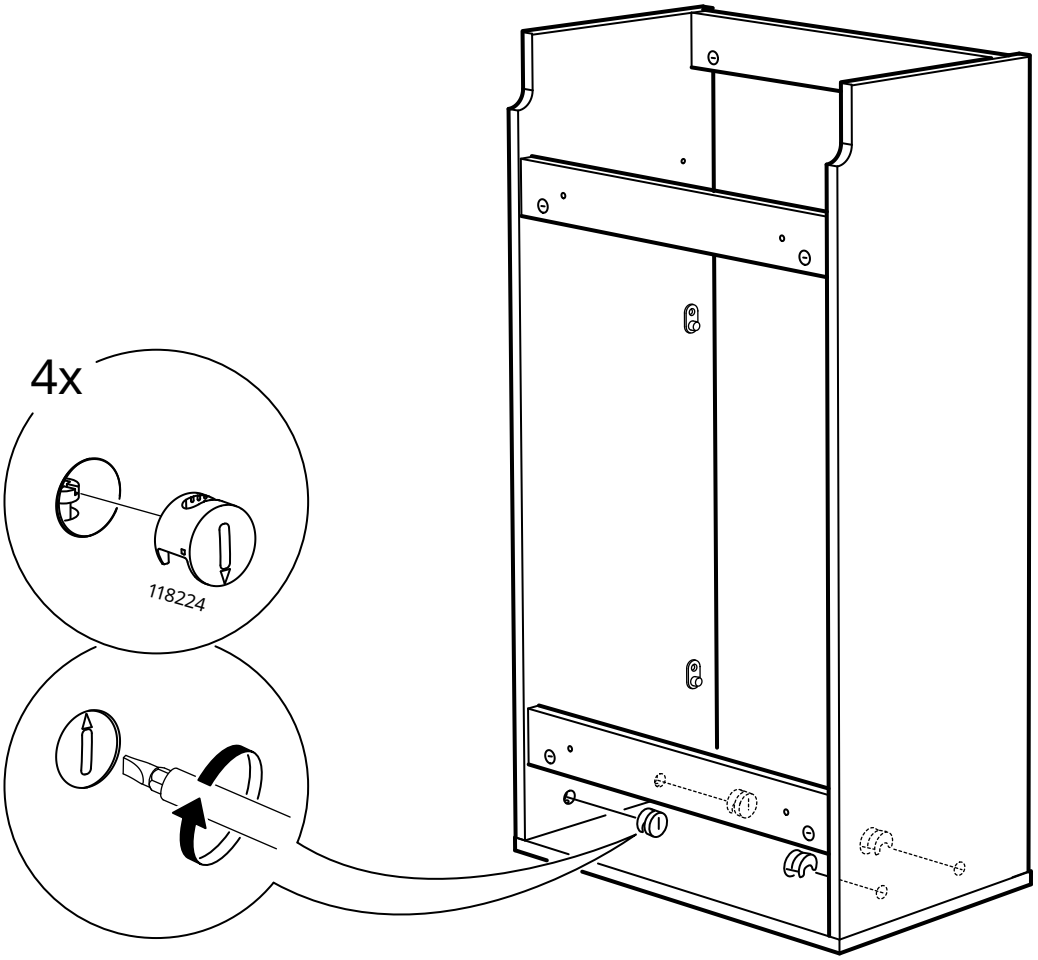

# 11

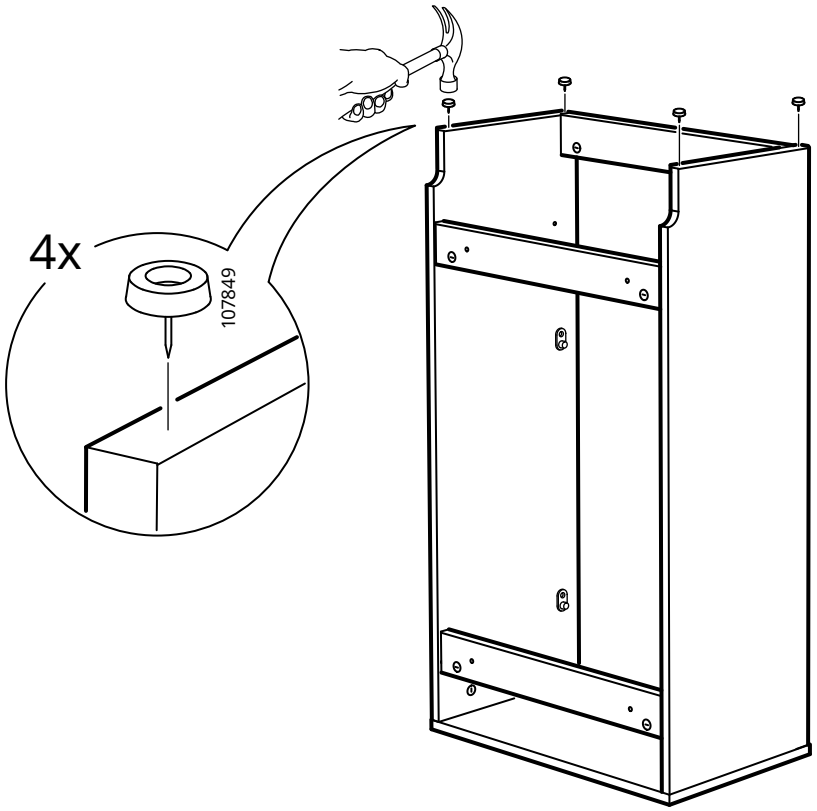


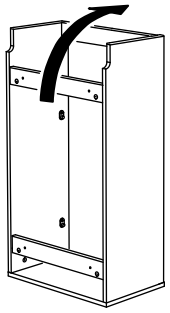

# 12

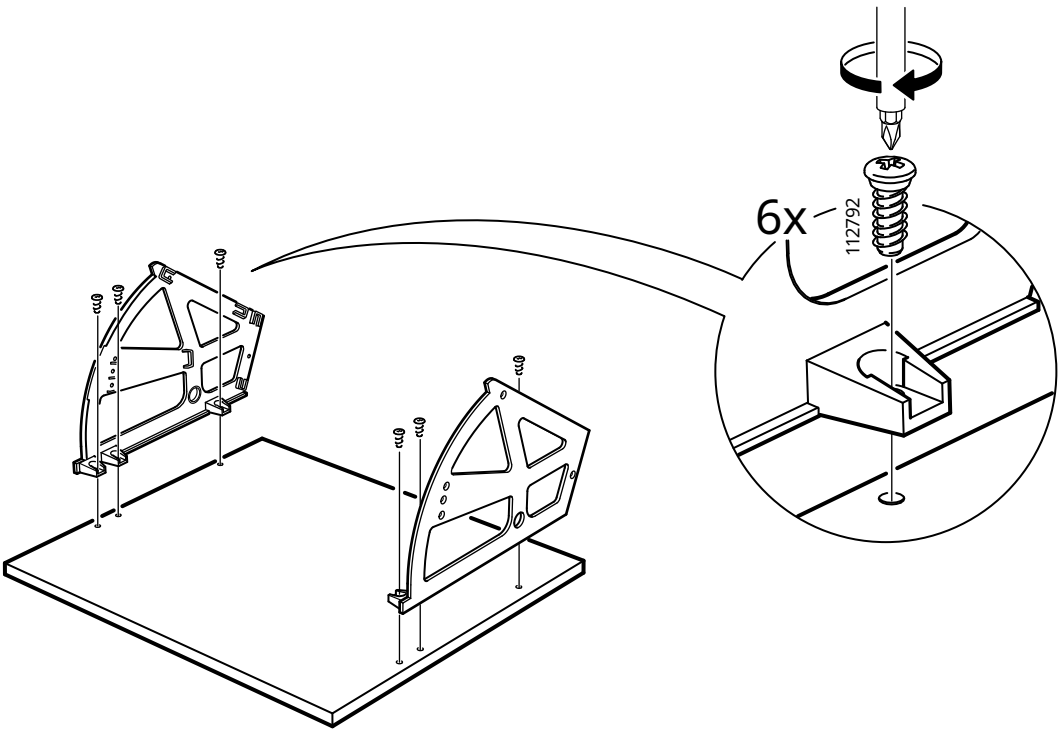

# 13

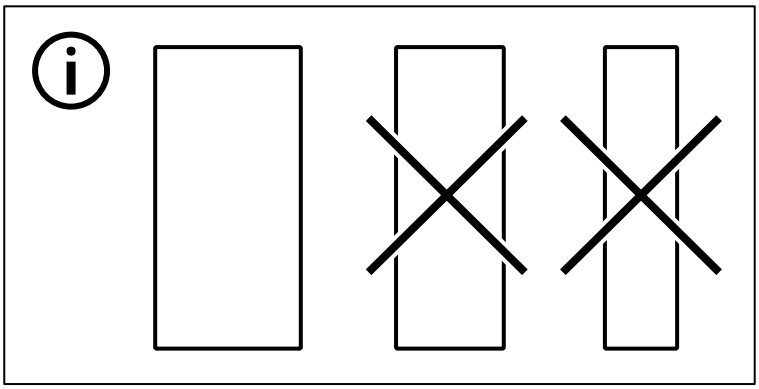

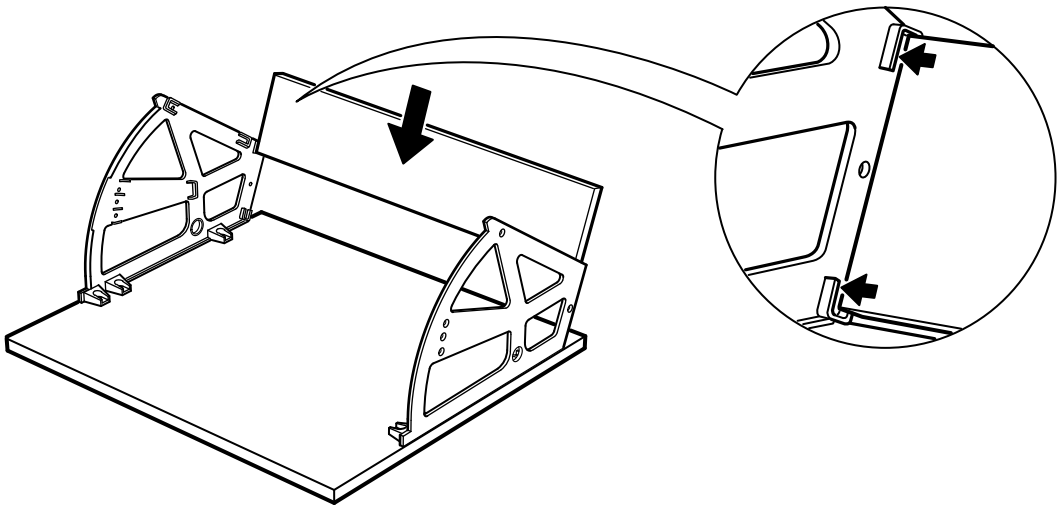

# 14

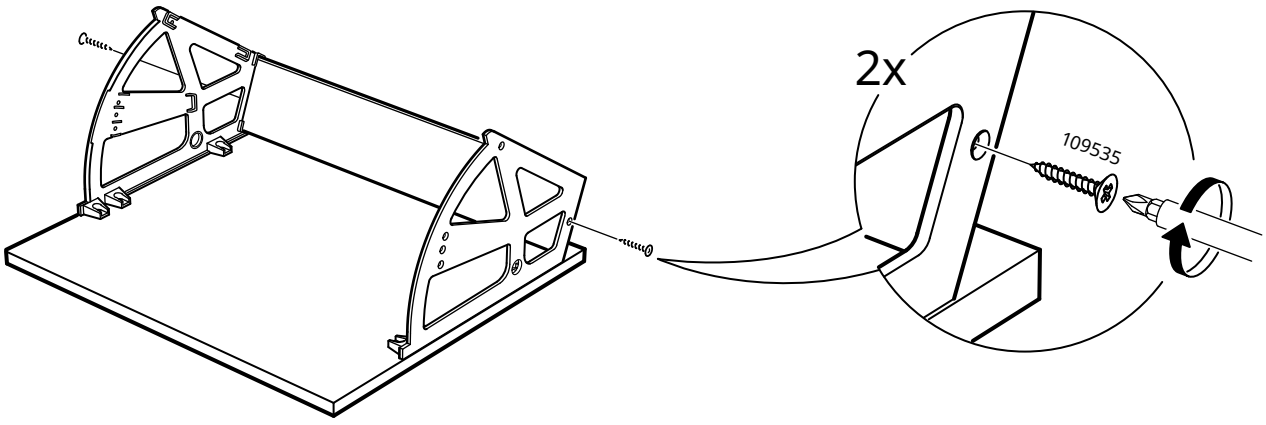

# 15

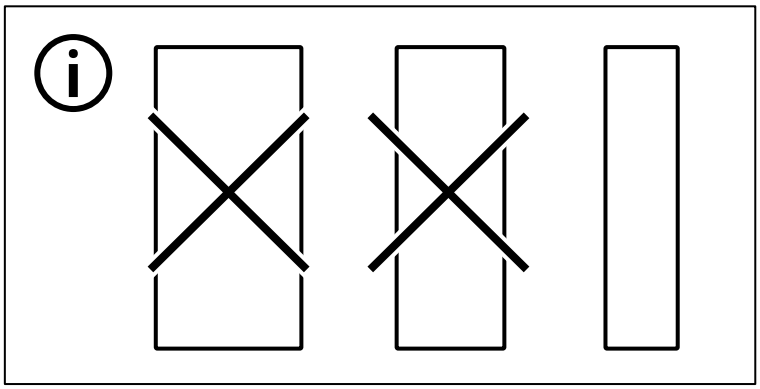

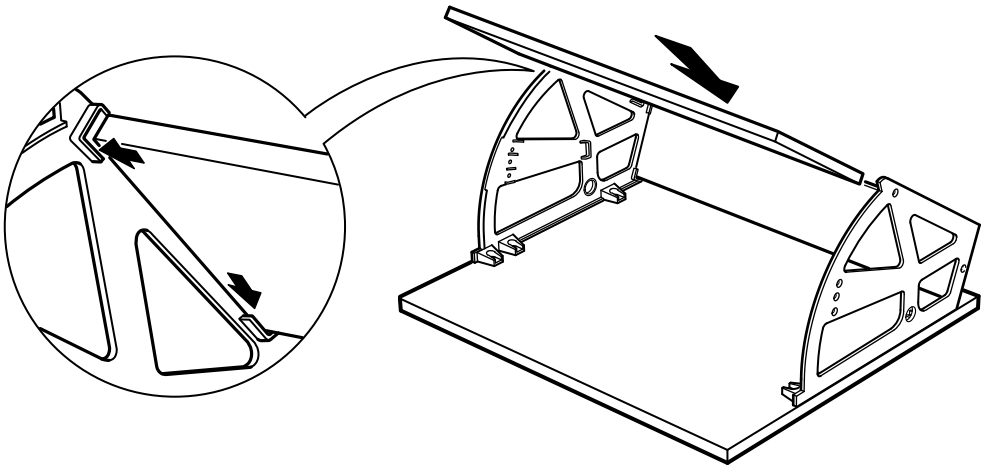

# 16

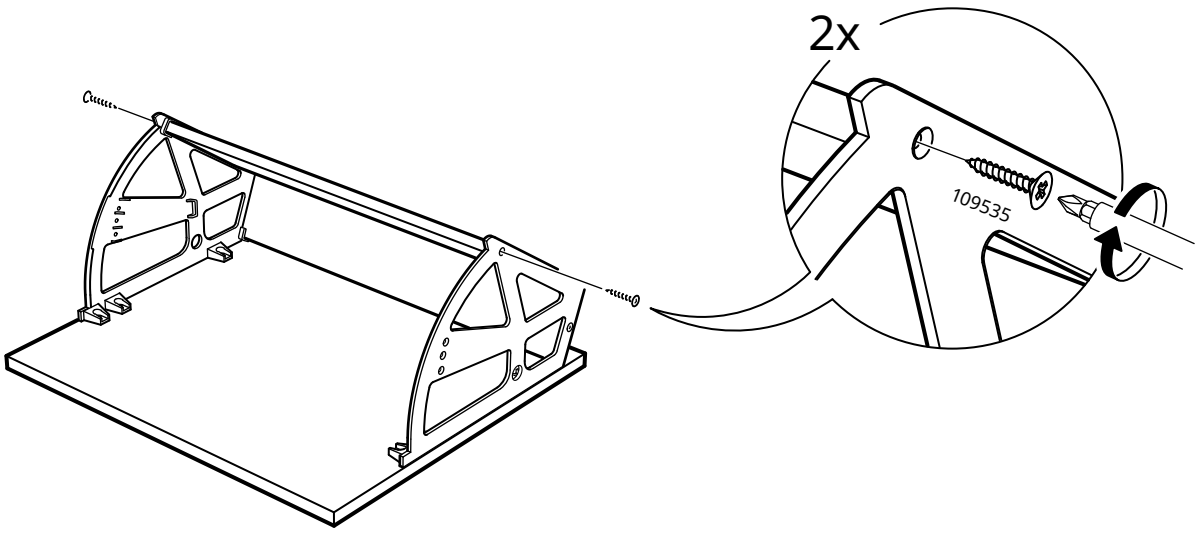

# 17

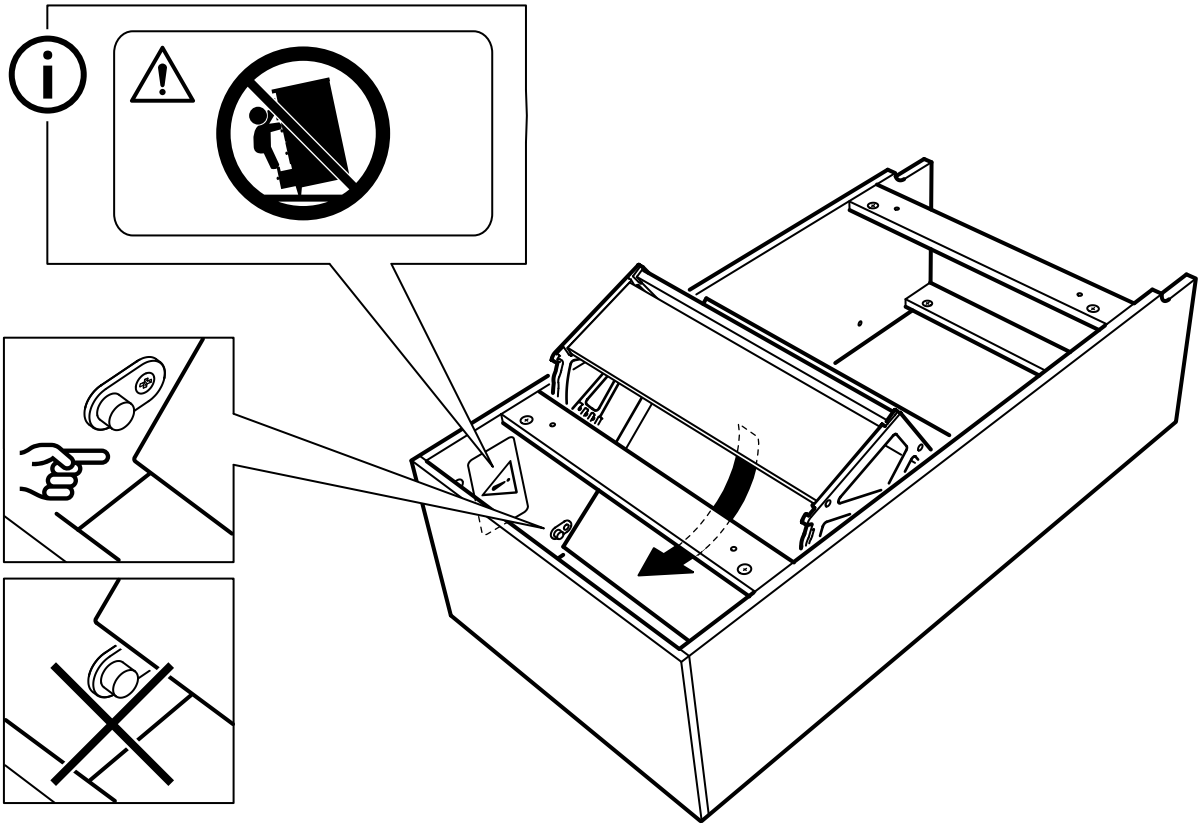

# 18

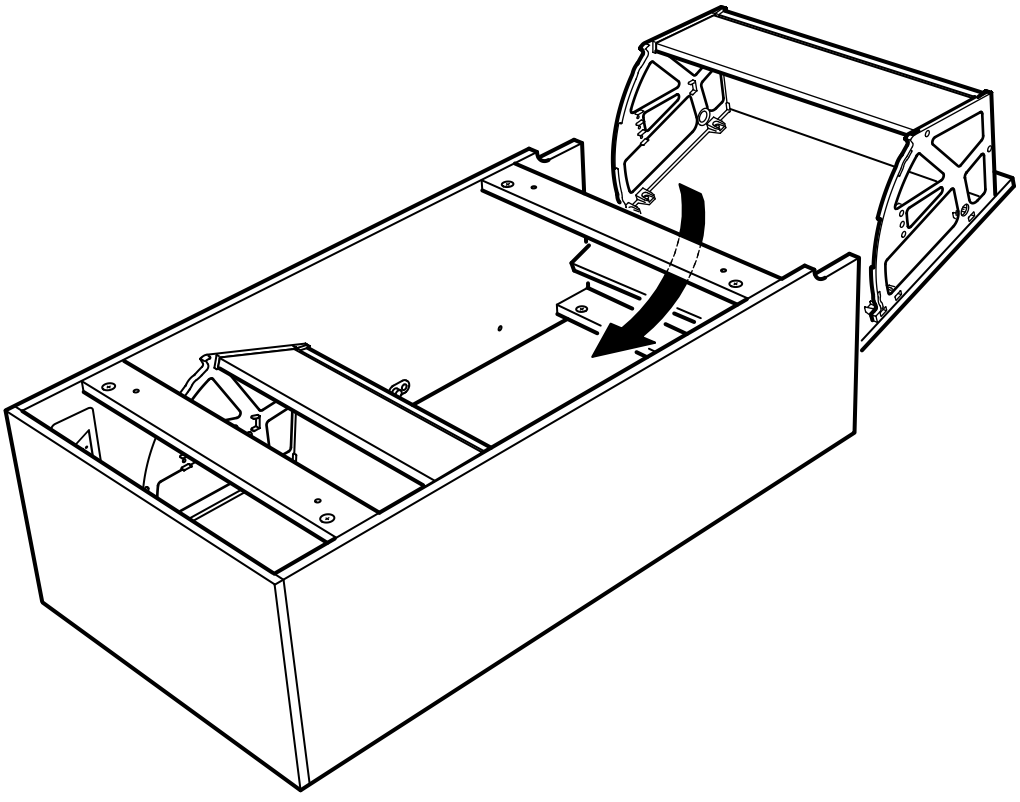

# 19

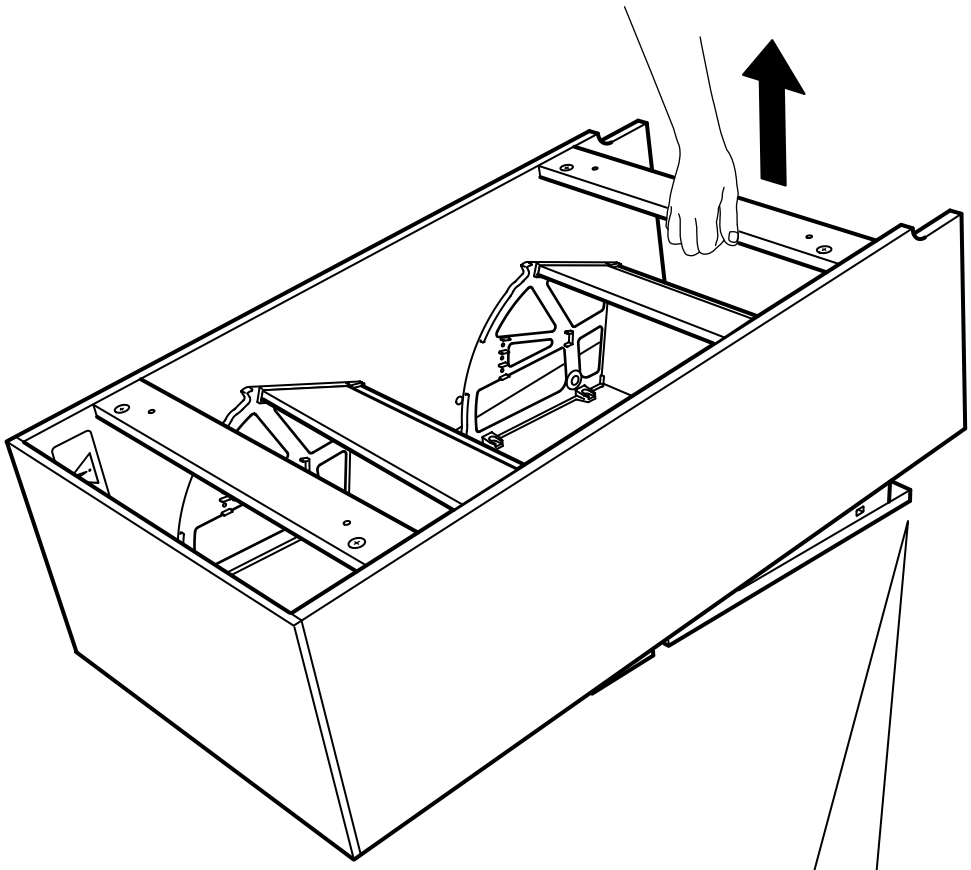

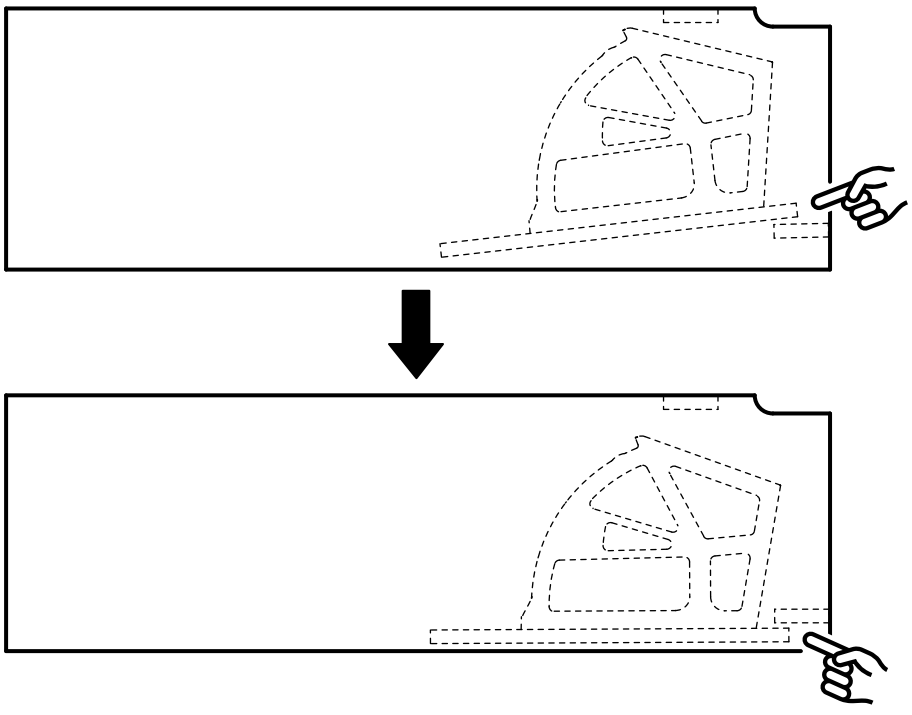

# 20

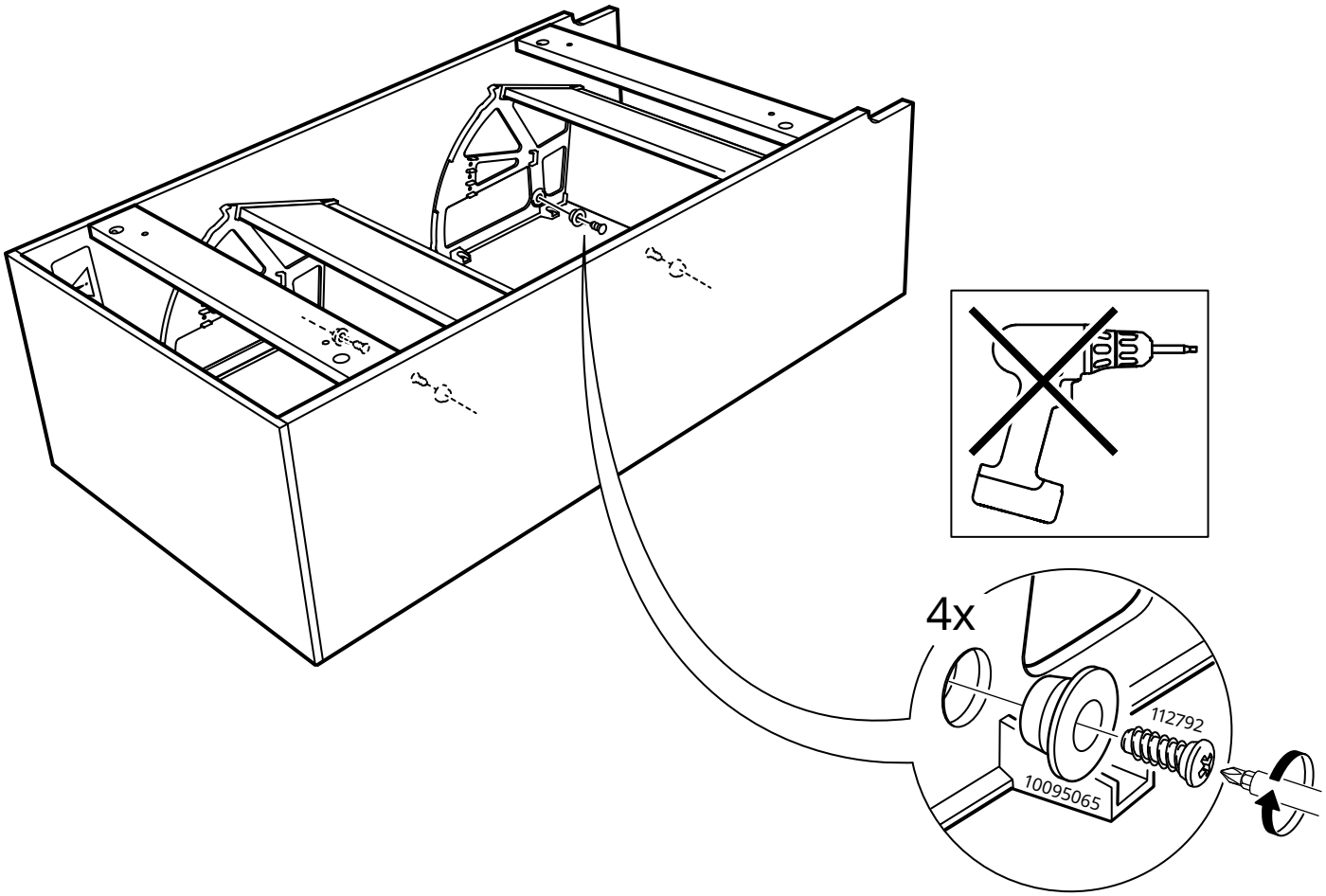


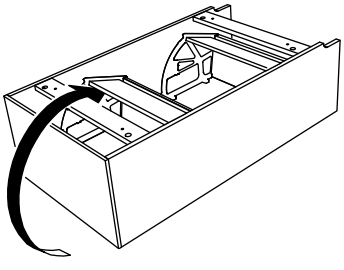



www.IKEA.com/secure-it

www.IKEA.cn/secure-it

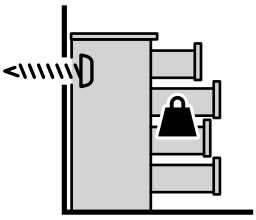

# 21

## English

The screw(s) and plug(s) supplied can be used with most solid (A) and hollow (B) walls. For solid wood (C) use the screw(s) without plug(s). If you are uncertain, seek professional advice.

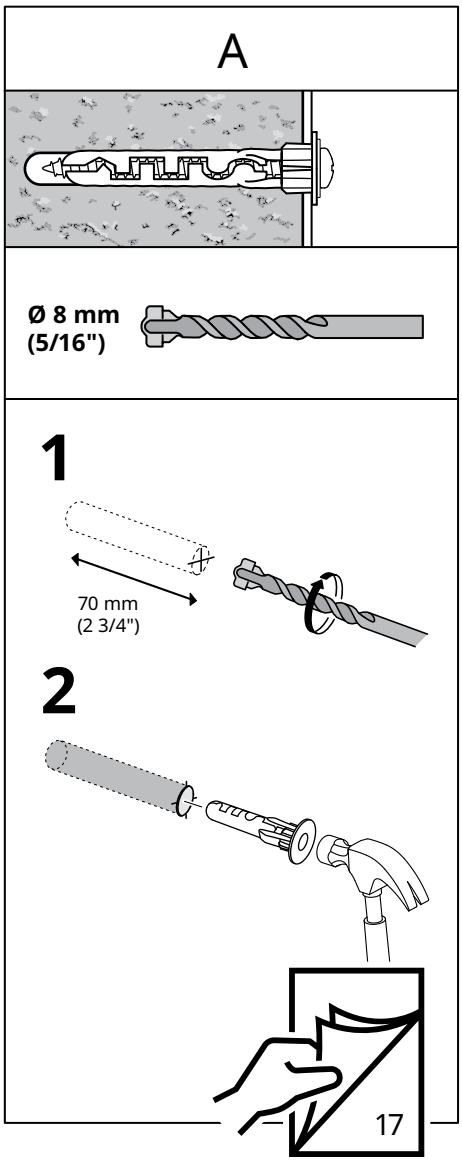


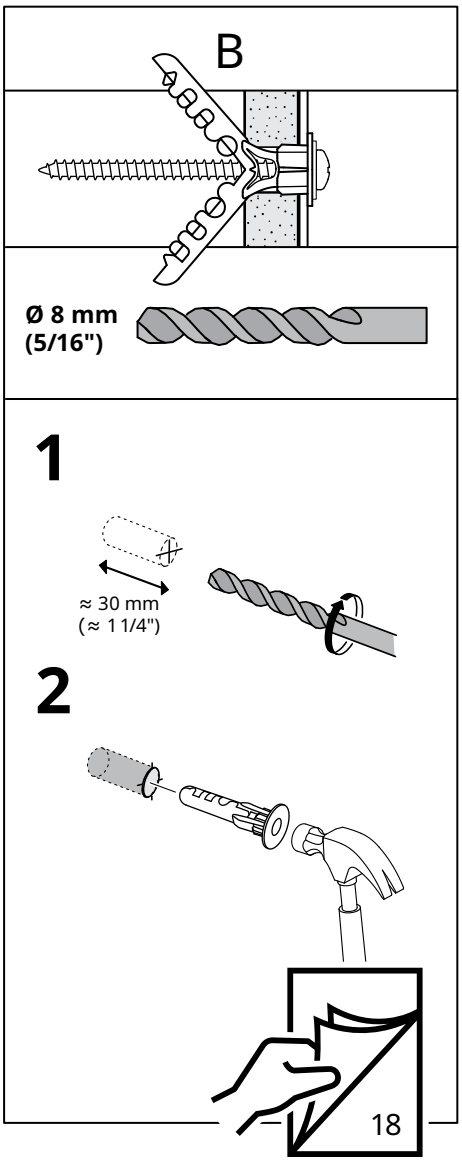


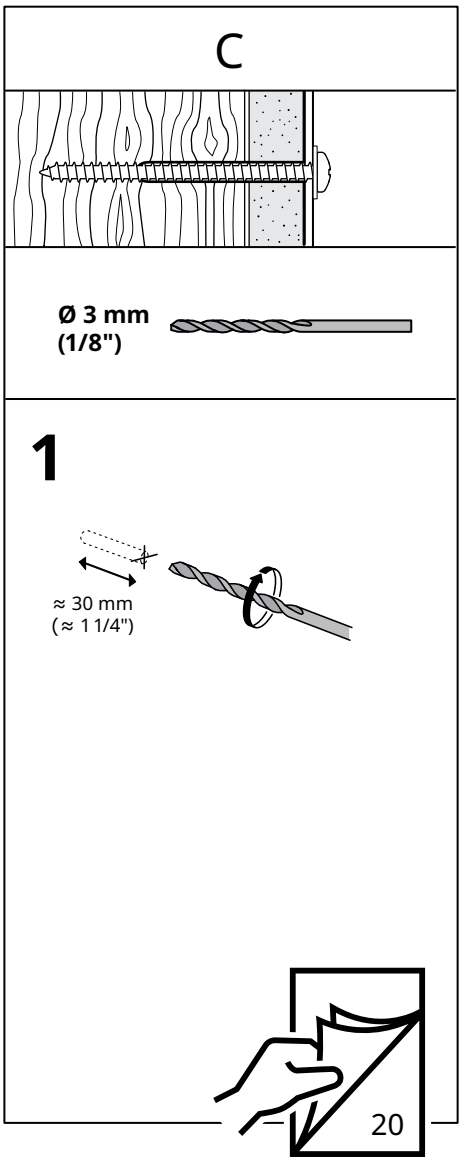

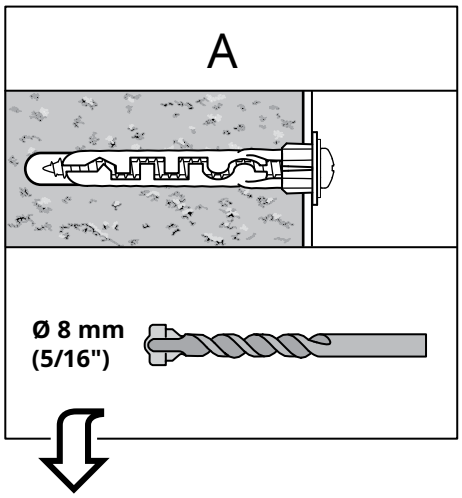


# 22

x

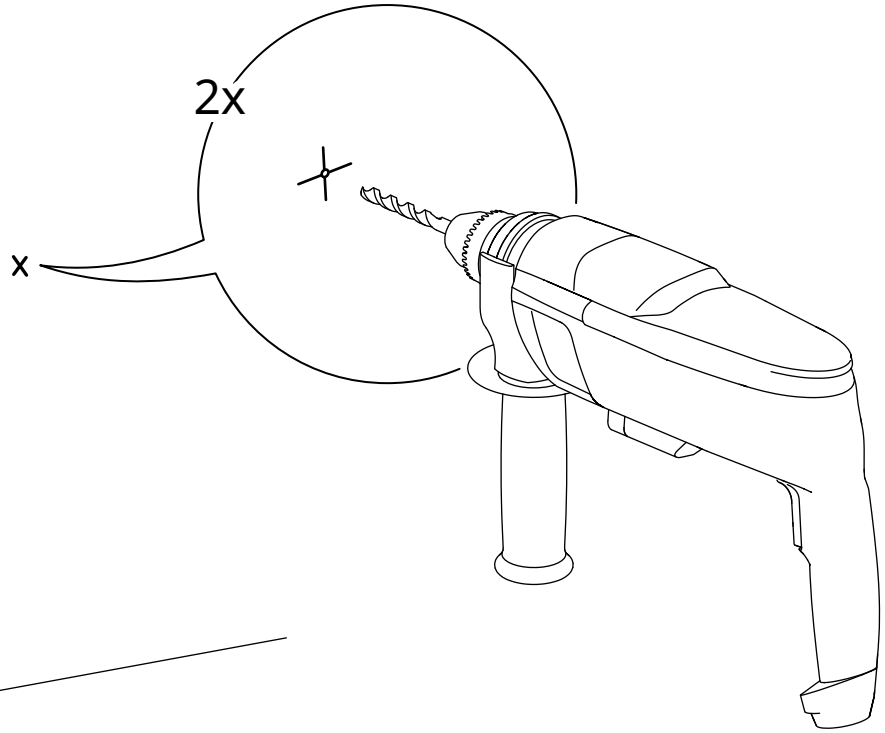


# 23

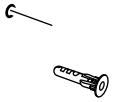

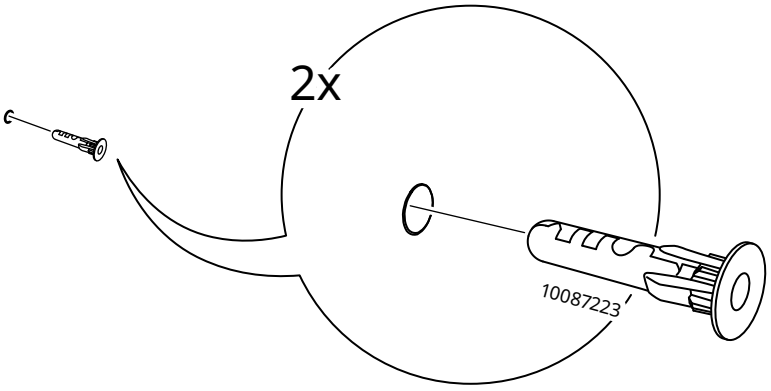


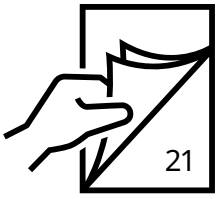

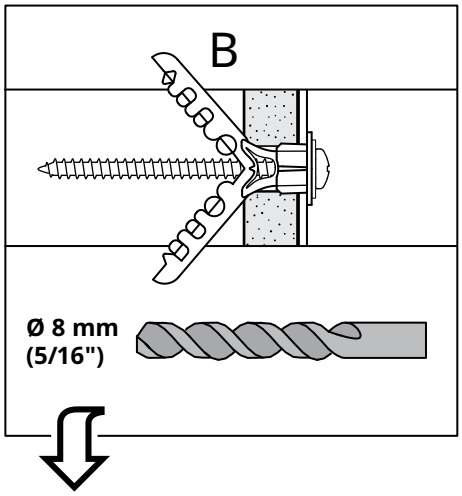


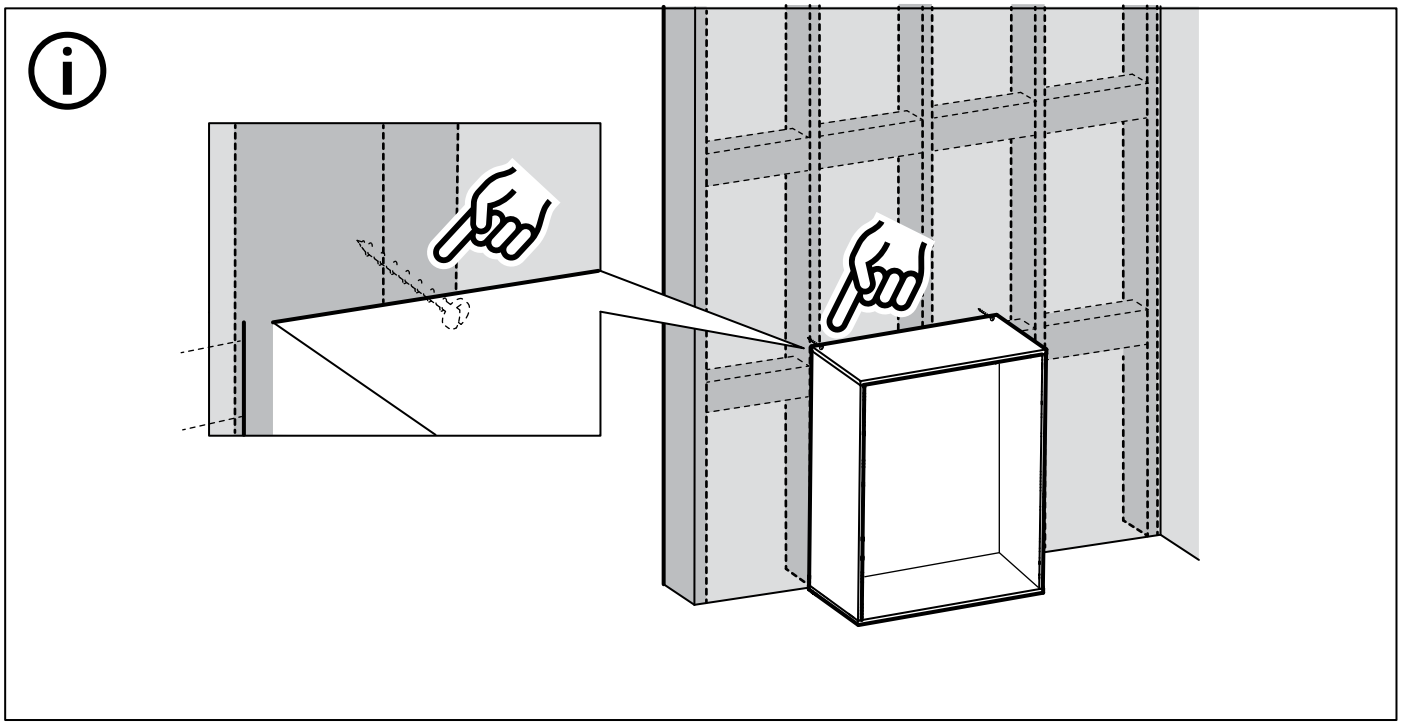

# 22

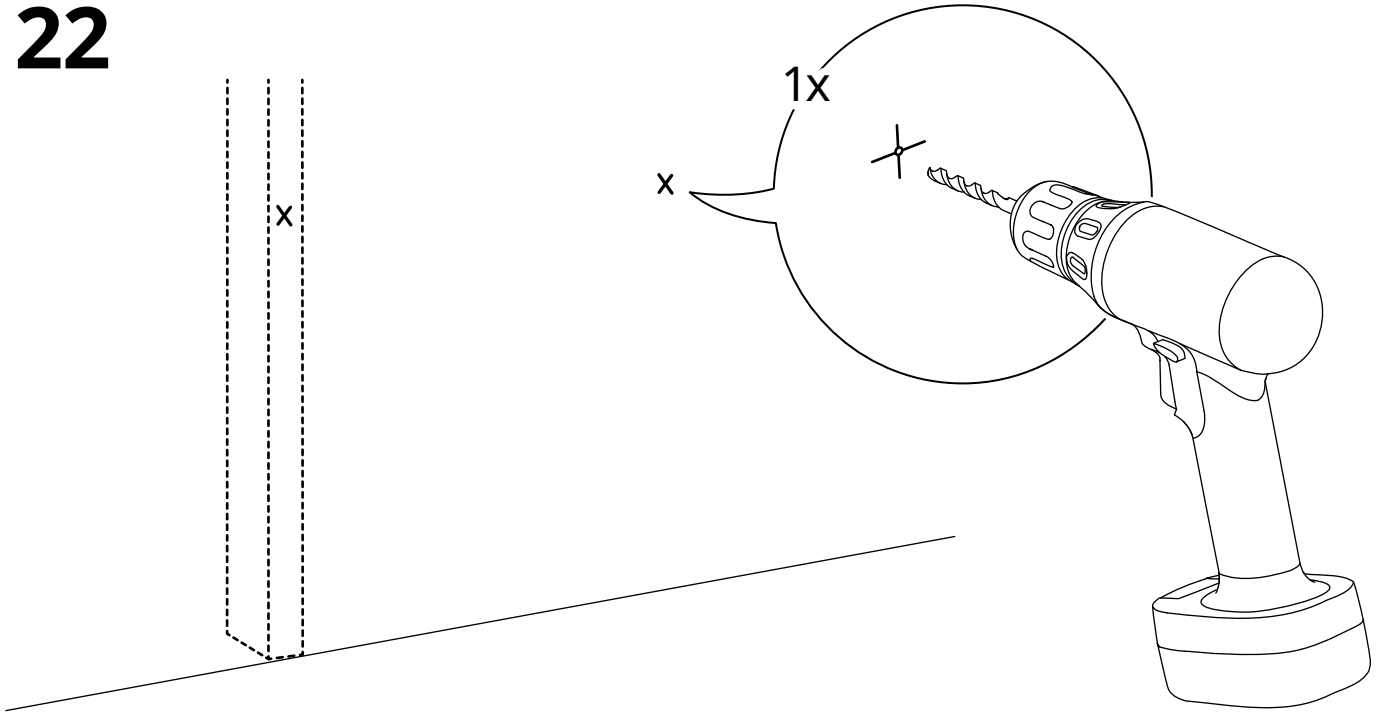

# 23

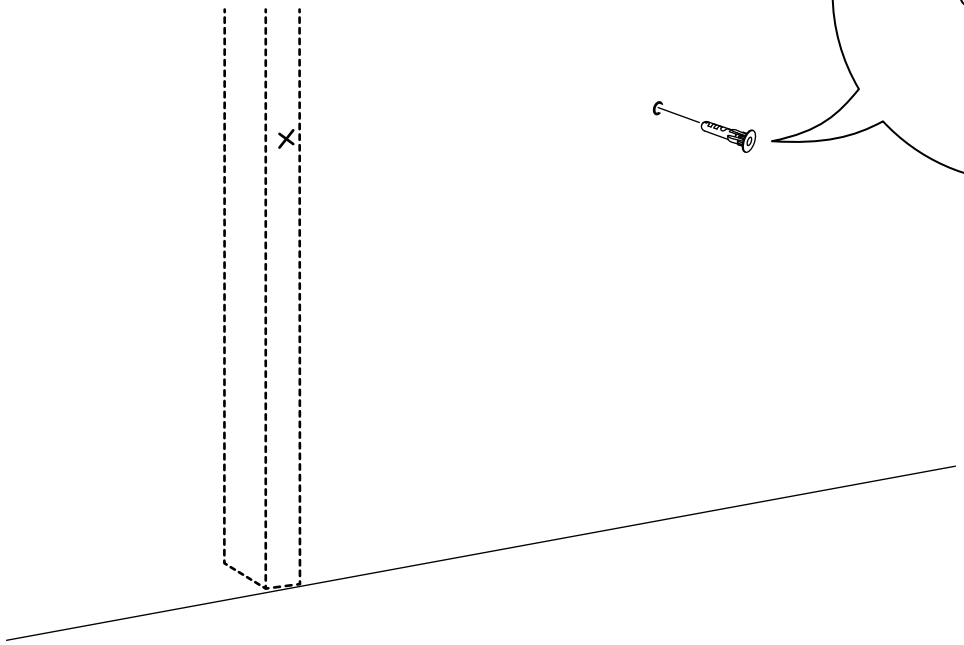

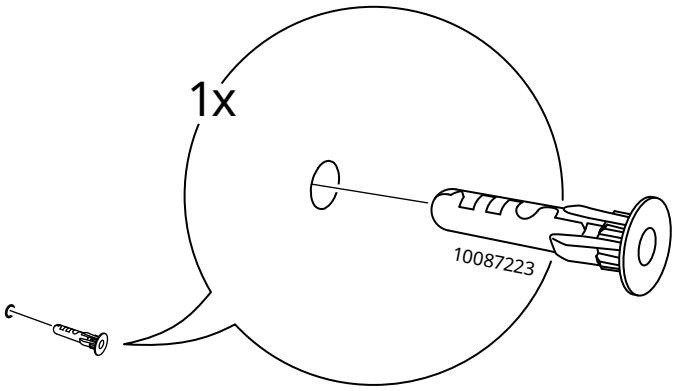


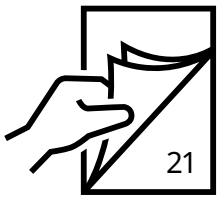

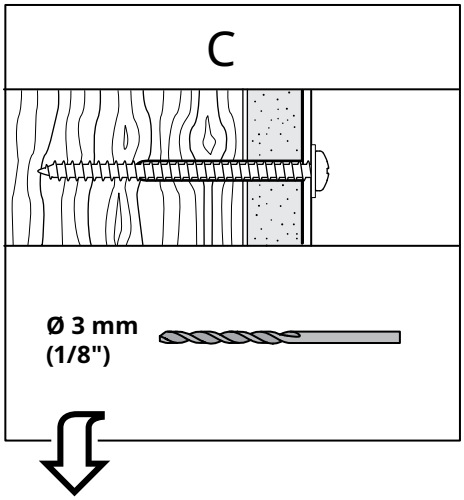


# 22

x

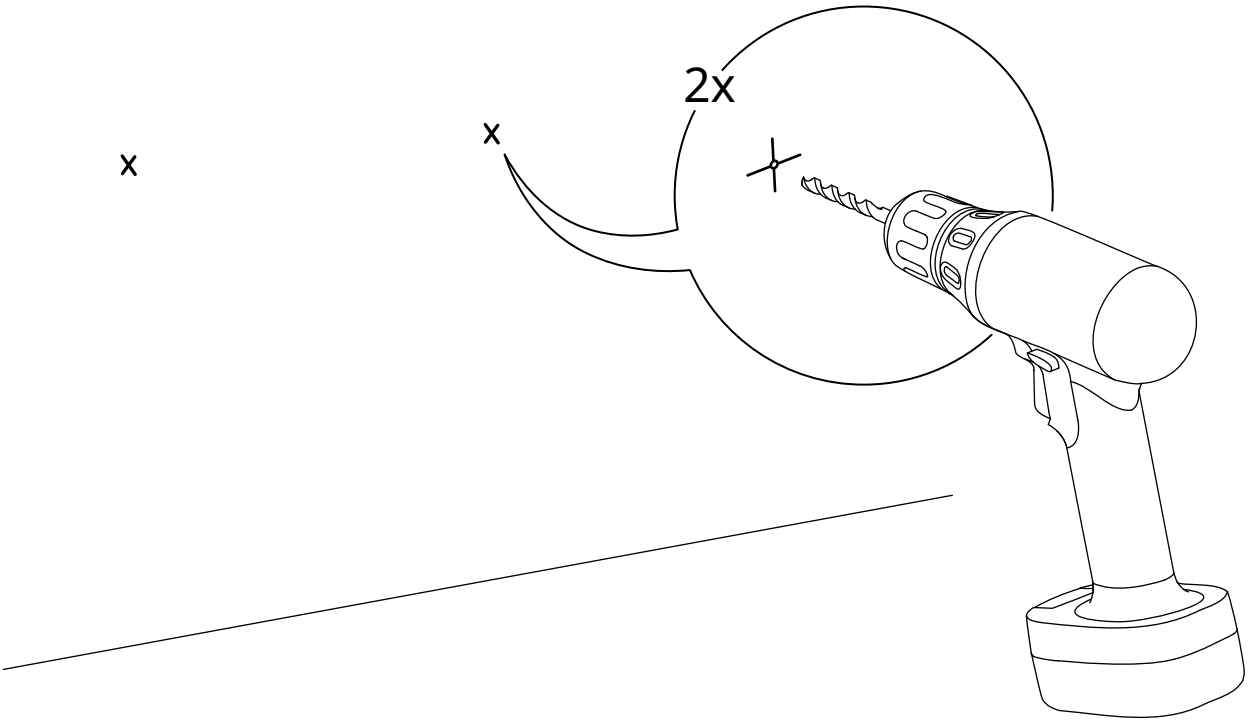

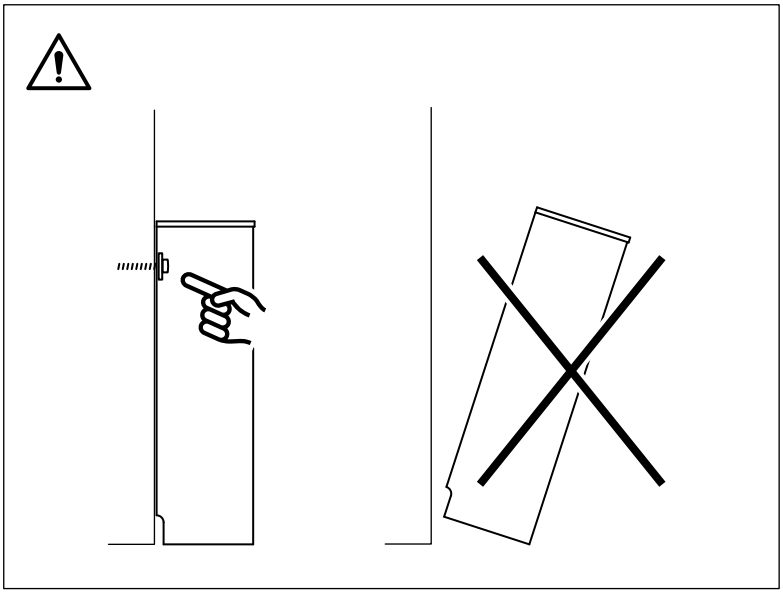

# 24

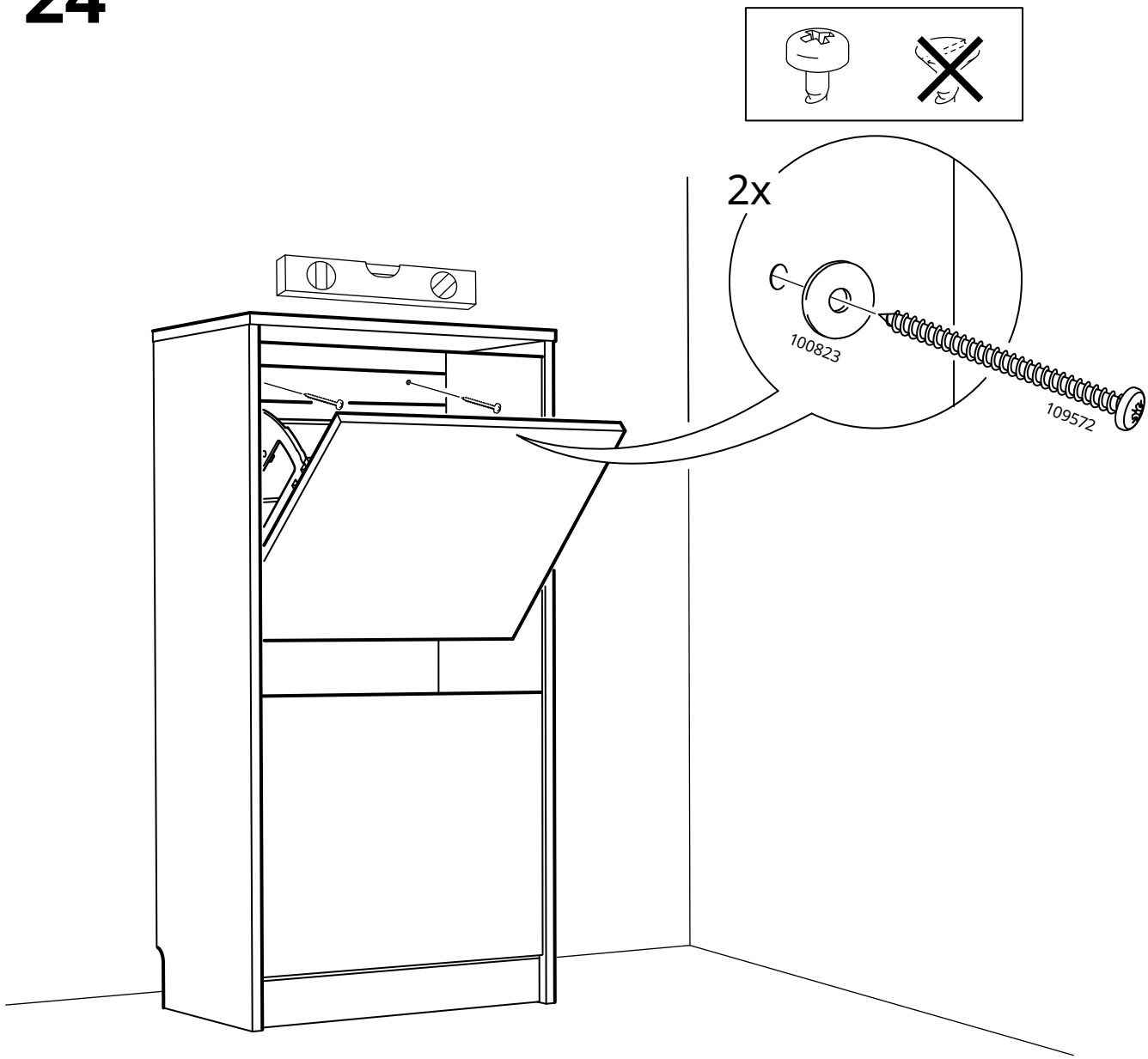

# 25

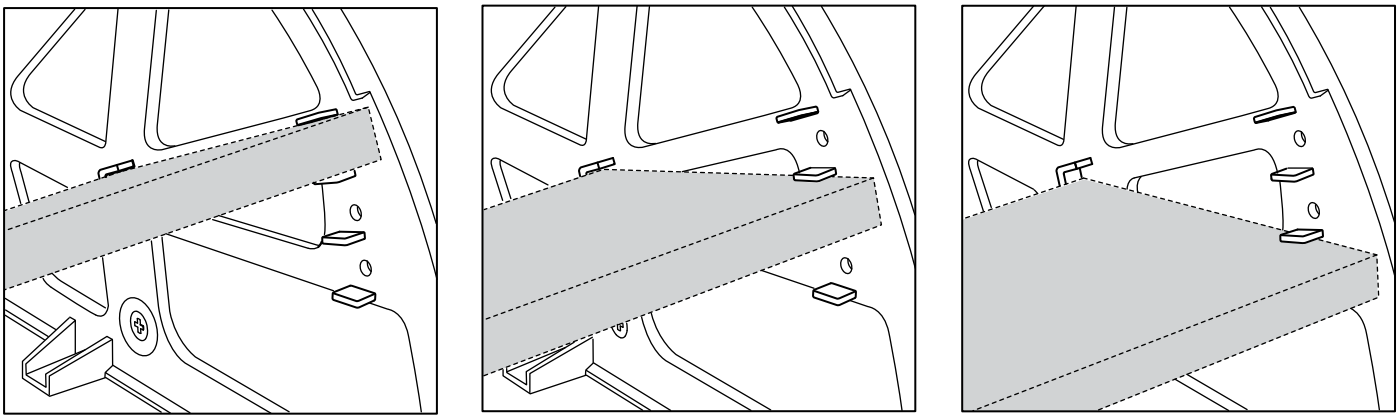

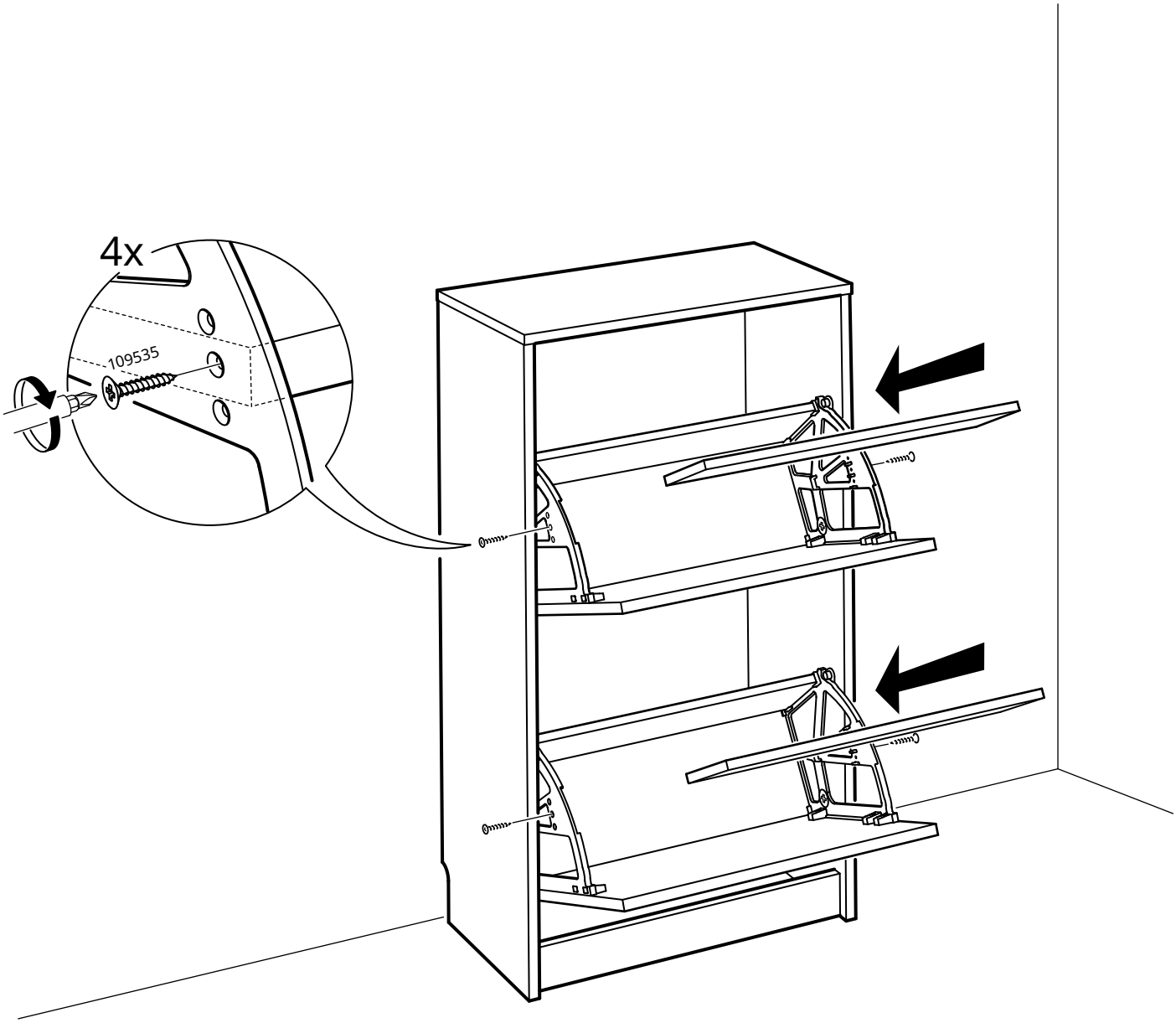

# 26

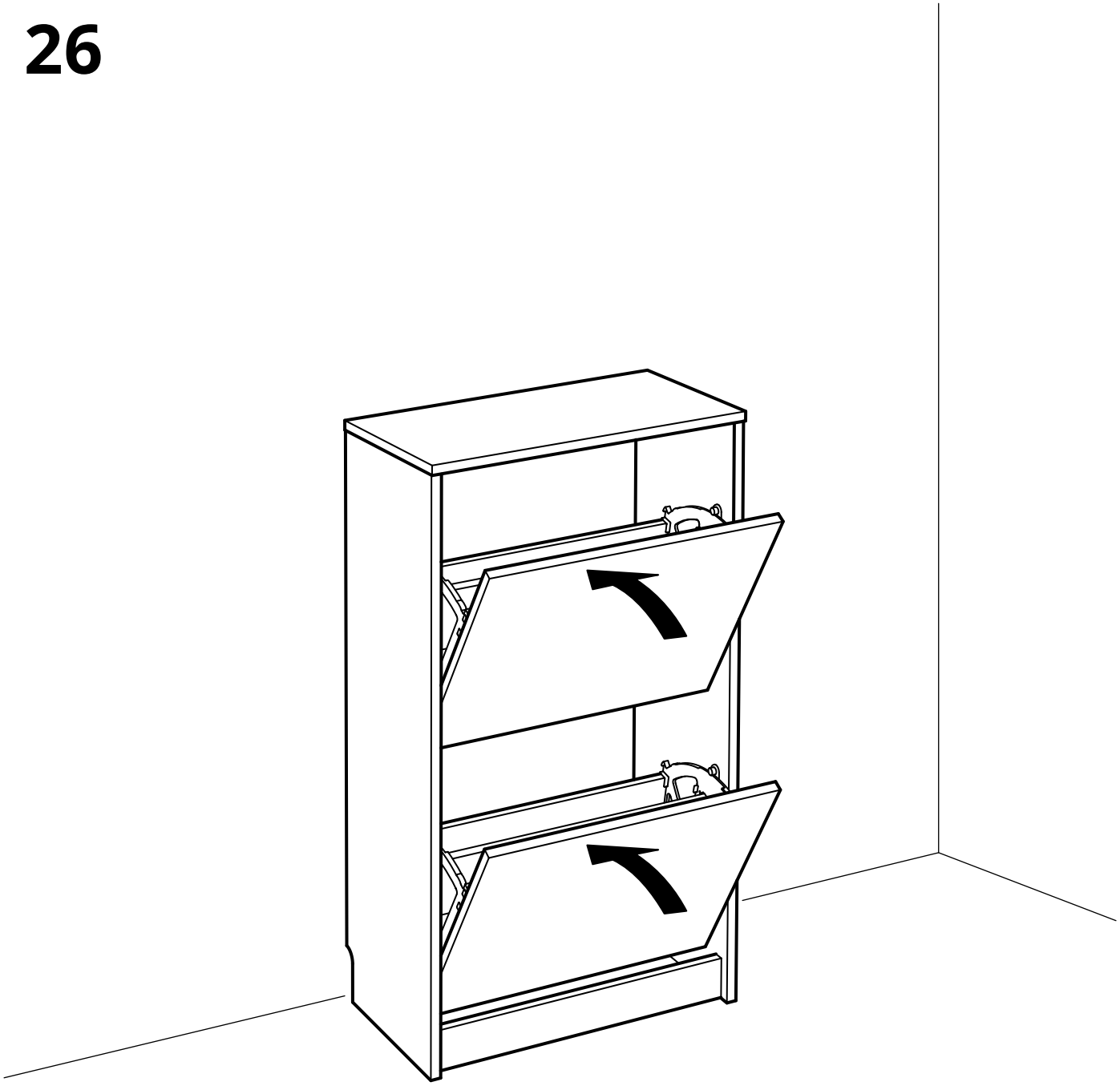

© Inter IKEA Systems B.V. 2024
2026-11-13 AA-2587024-3