BEKVÄM

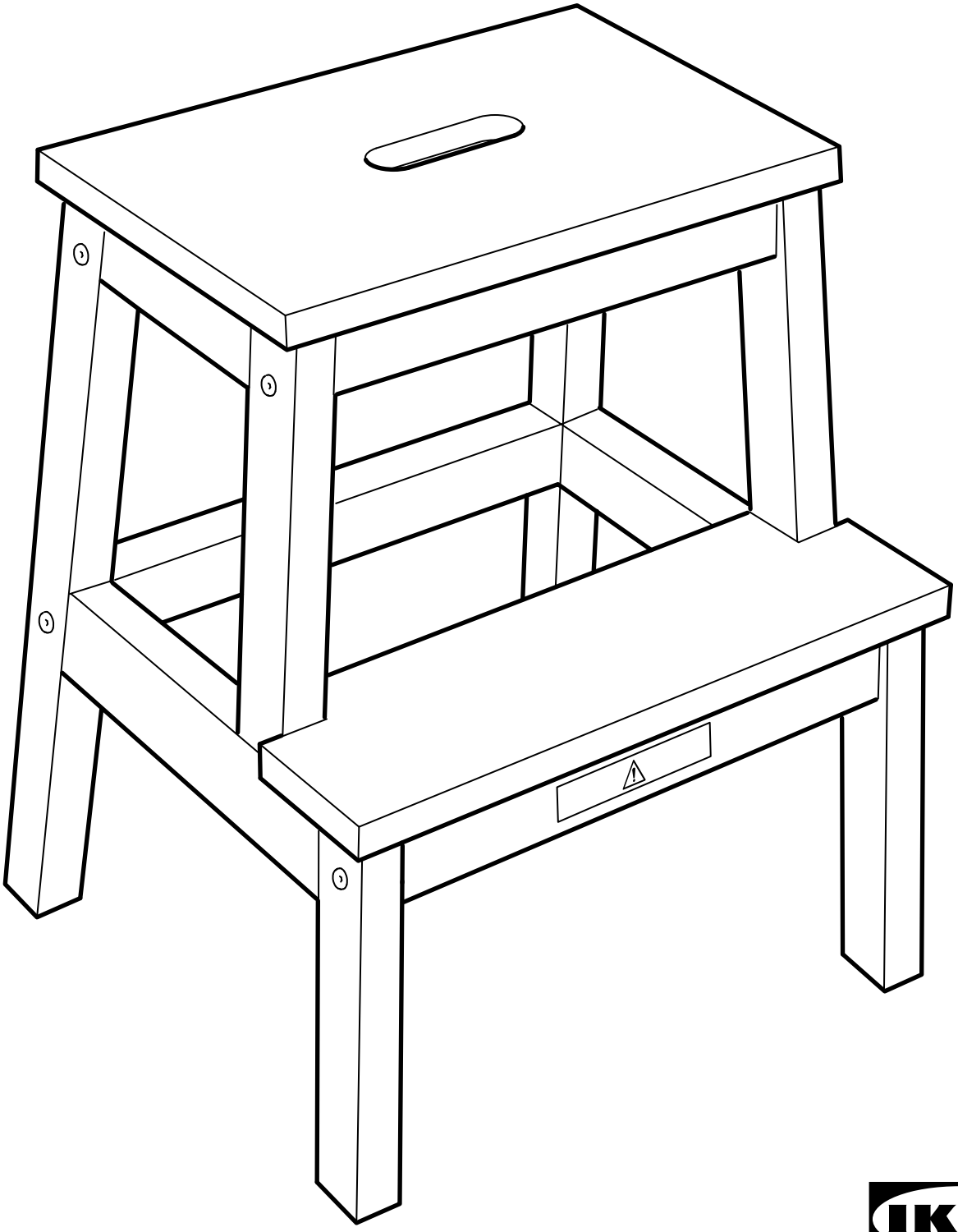

Design and Quality
IKEA of Sweden

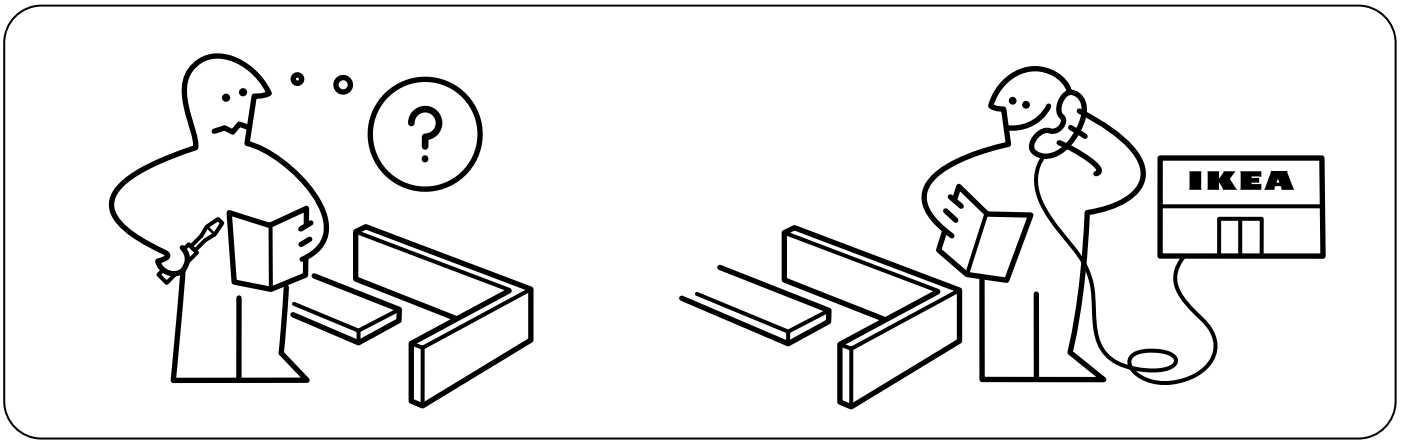
IKEA

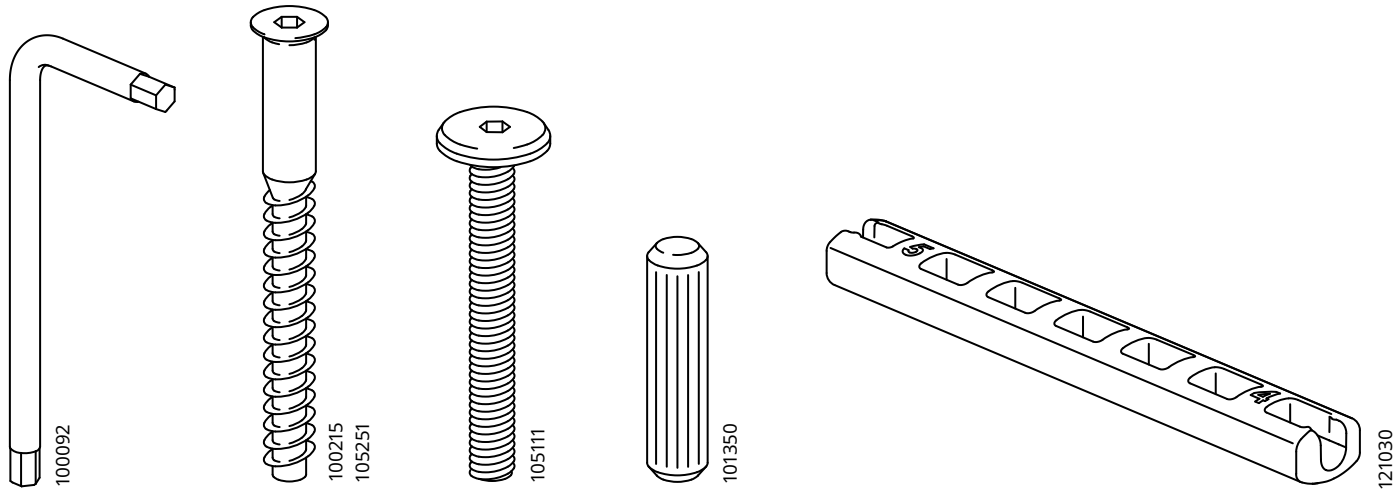
100092
100215
105251
105111
101350
121030

1x 8x 3x 2x 1x

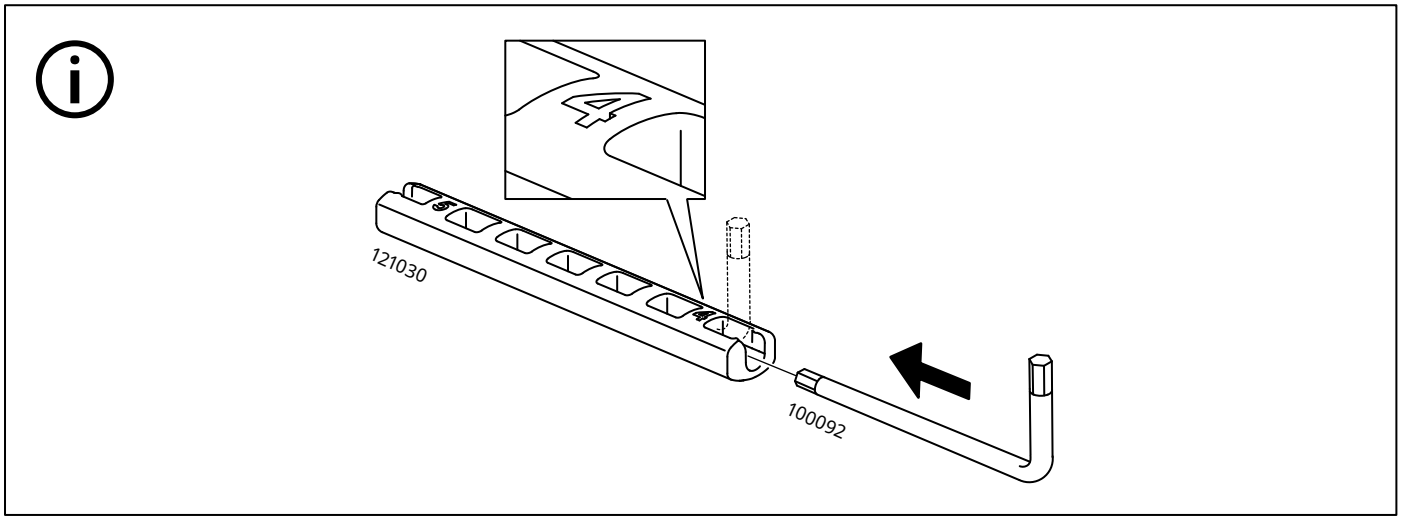
121030
100092

1

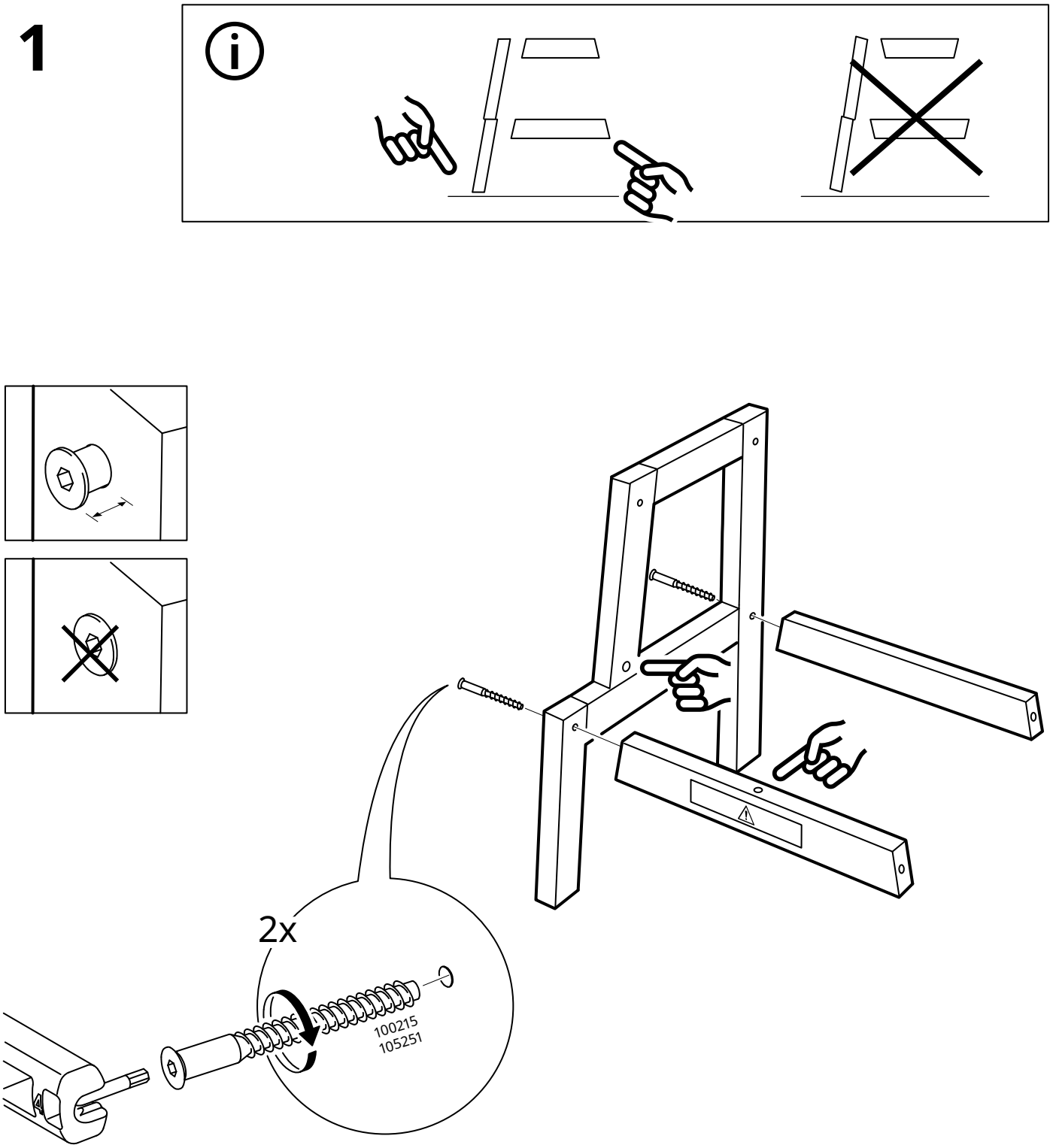

2

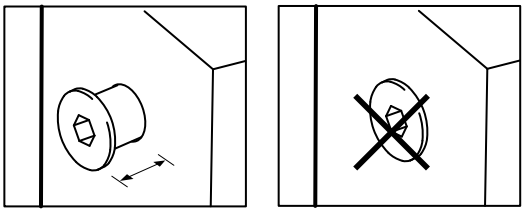

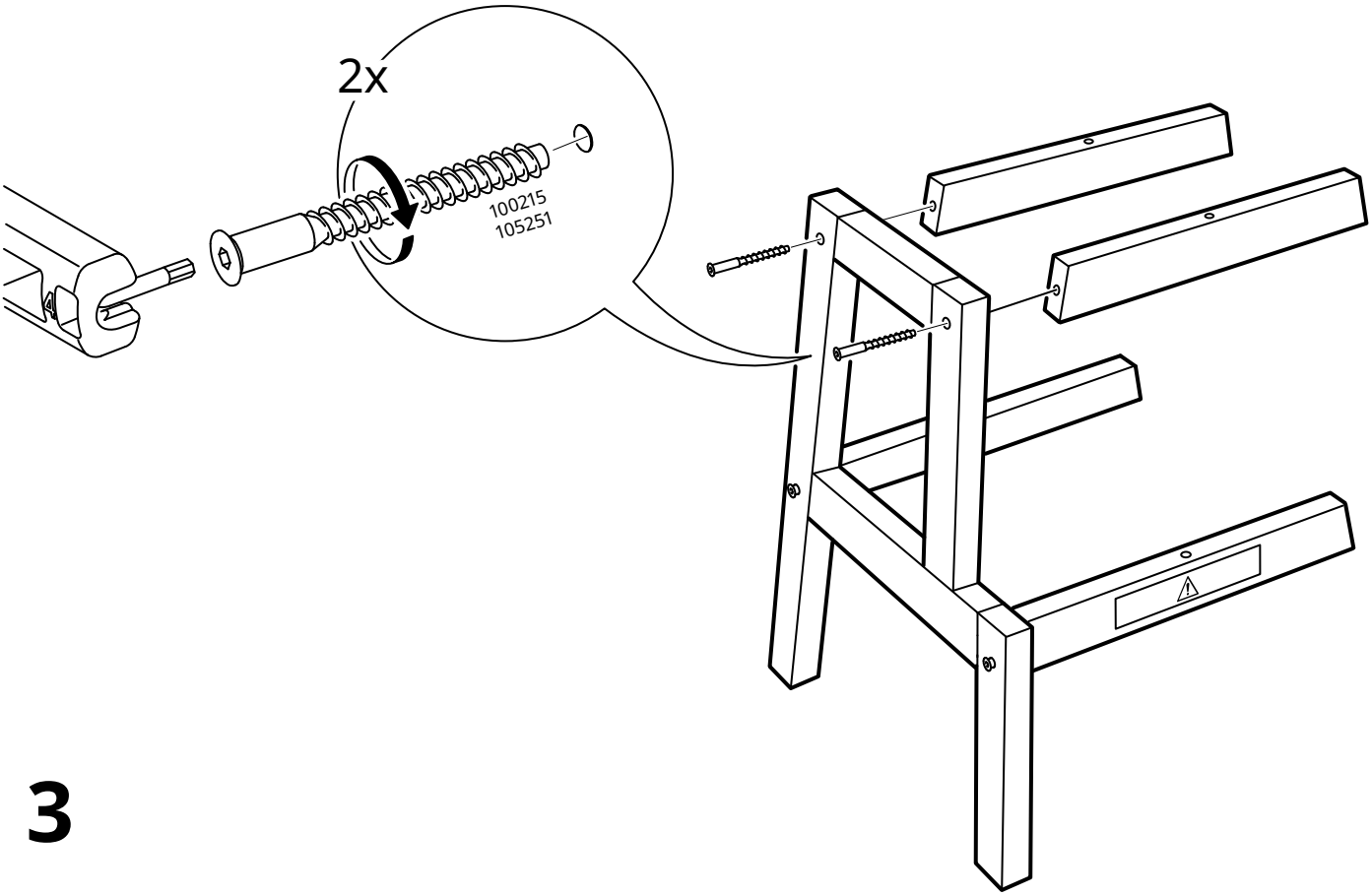

3

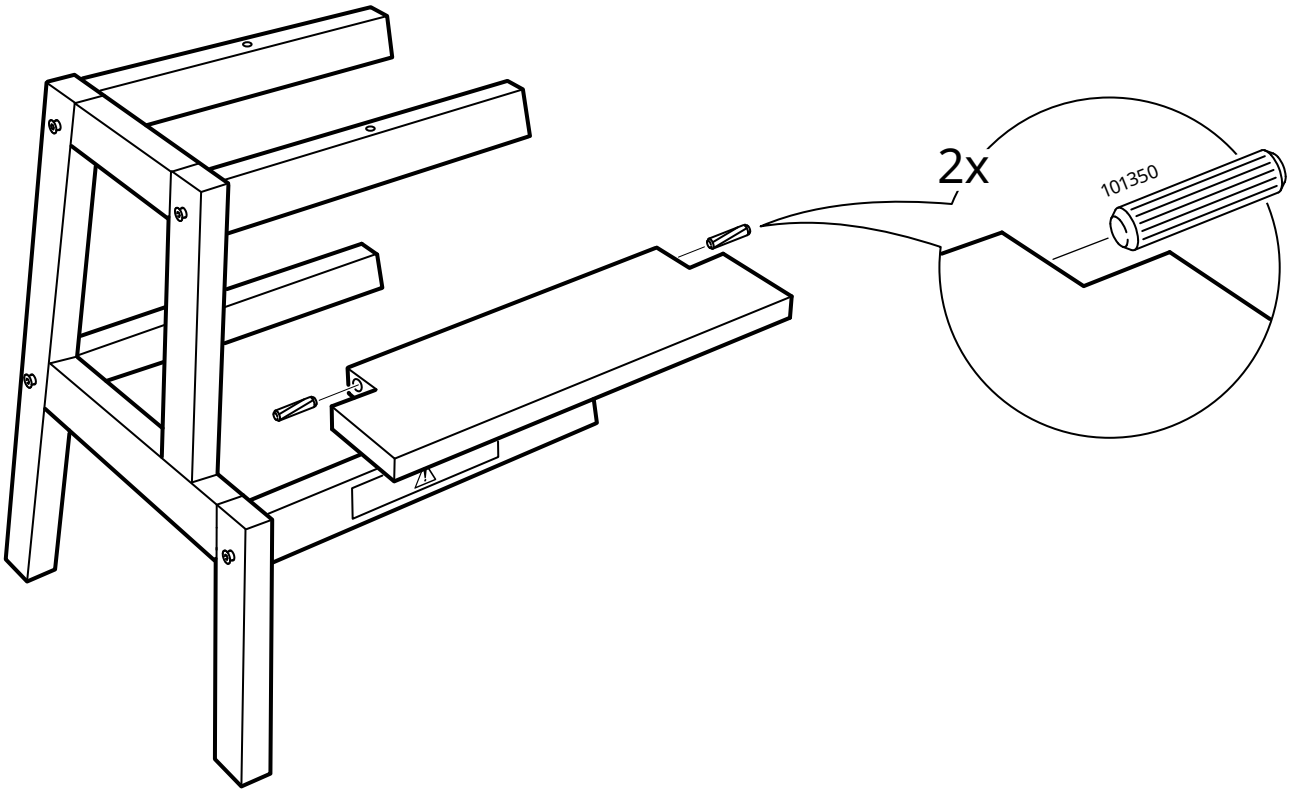

4

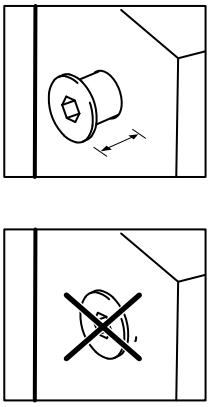

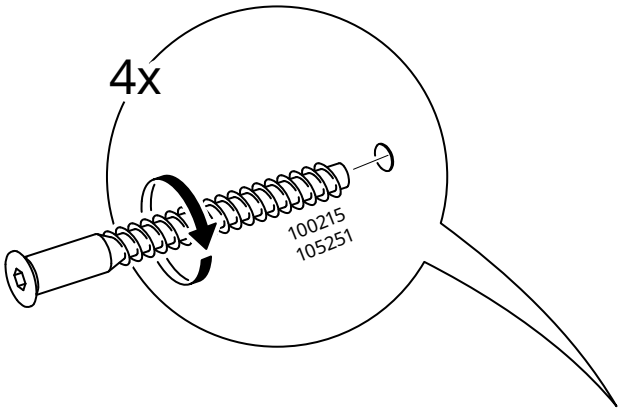

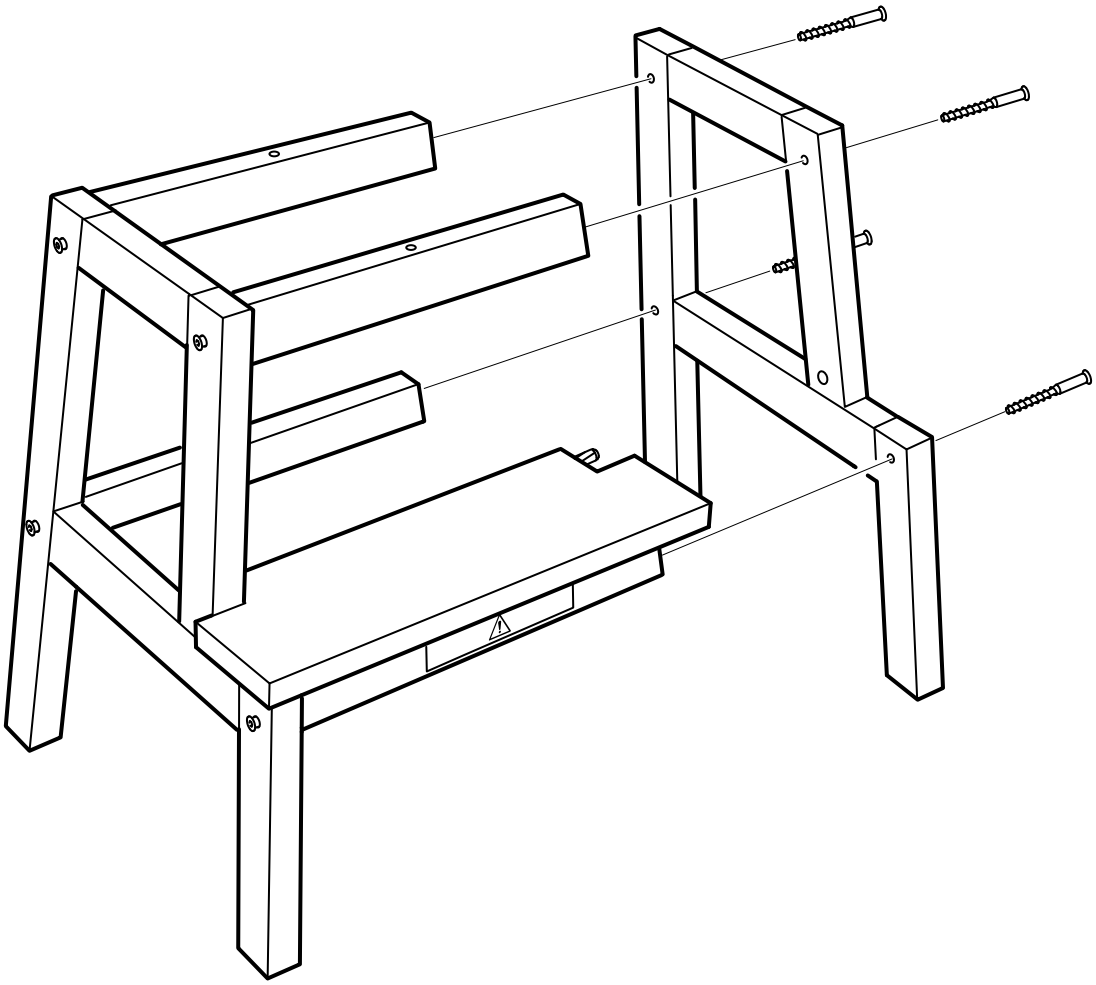

5

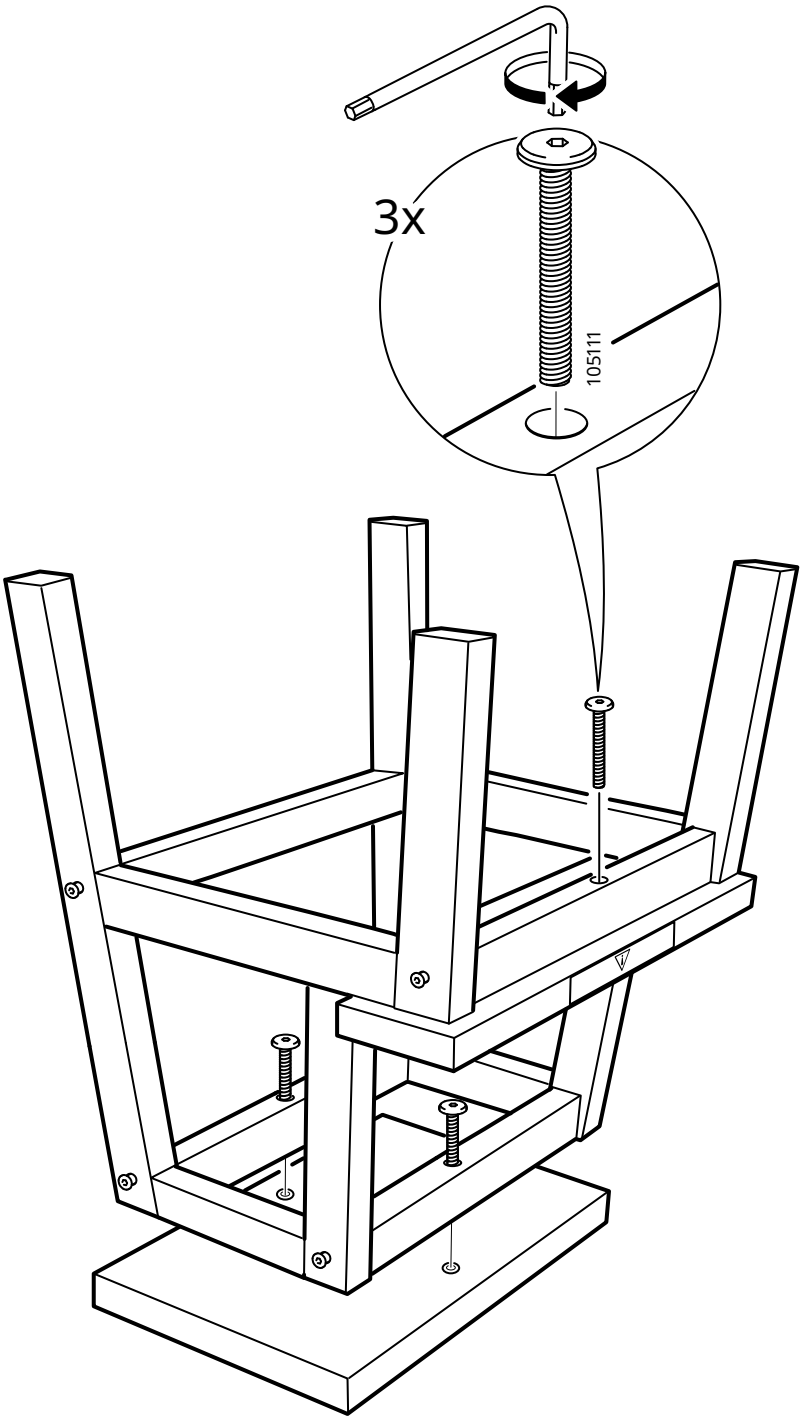

6

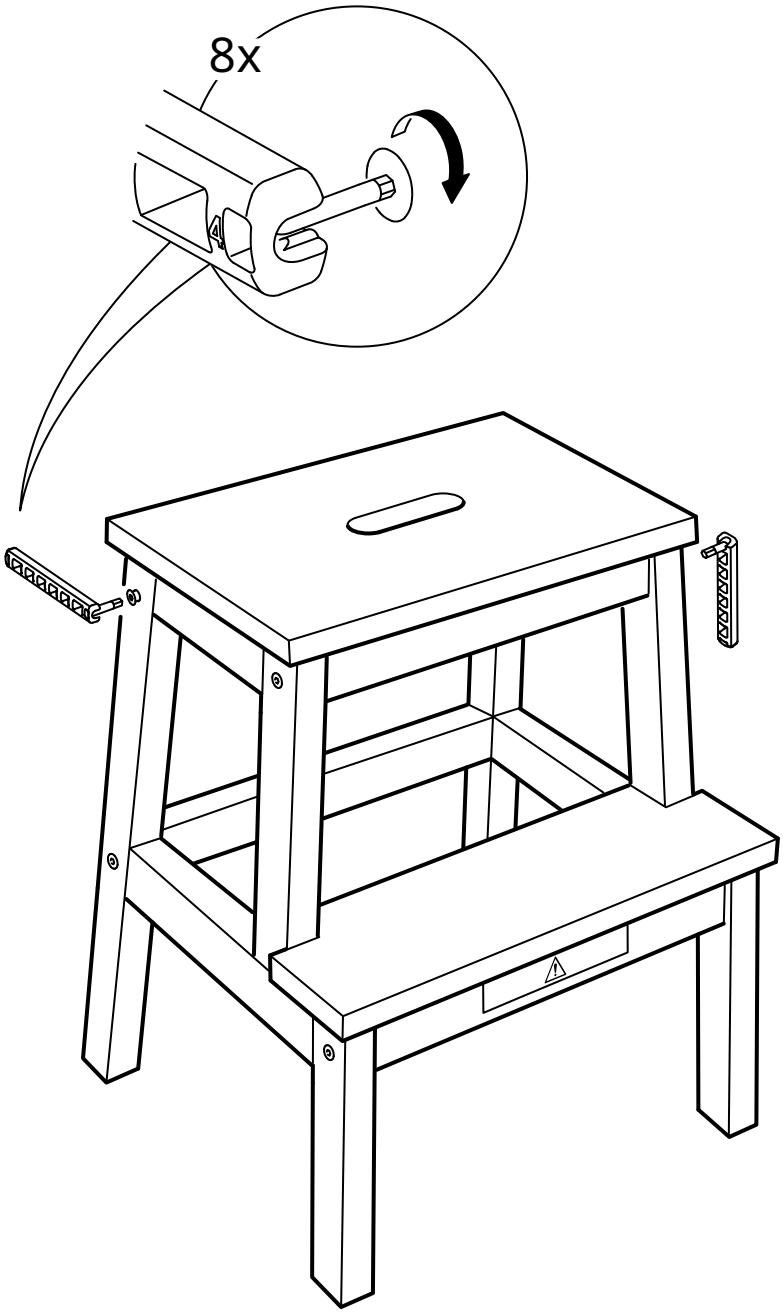

© Inter IKEA Systems B.V. 2009