ÄPPLARÖ

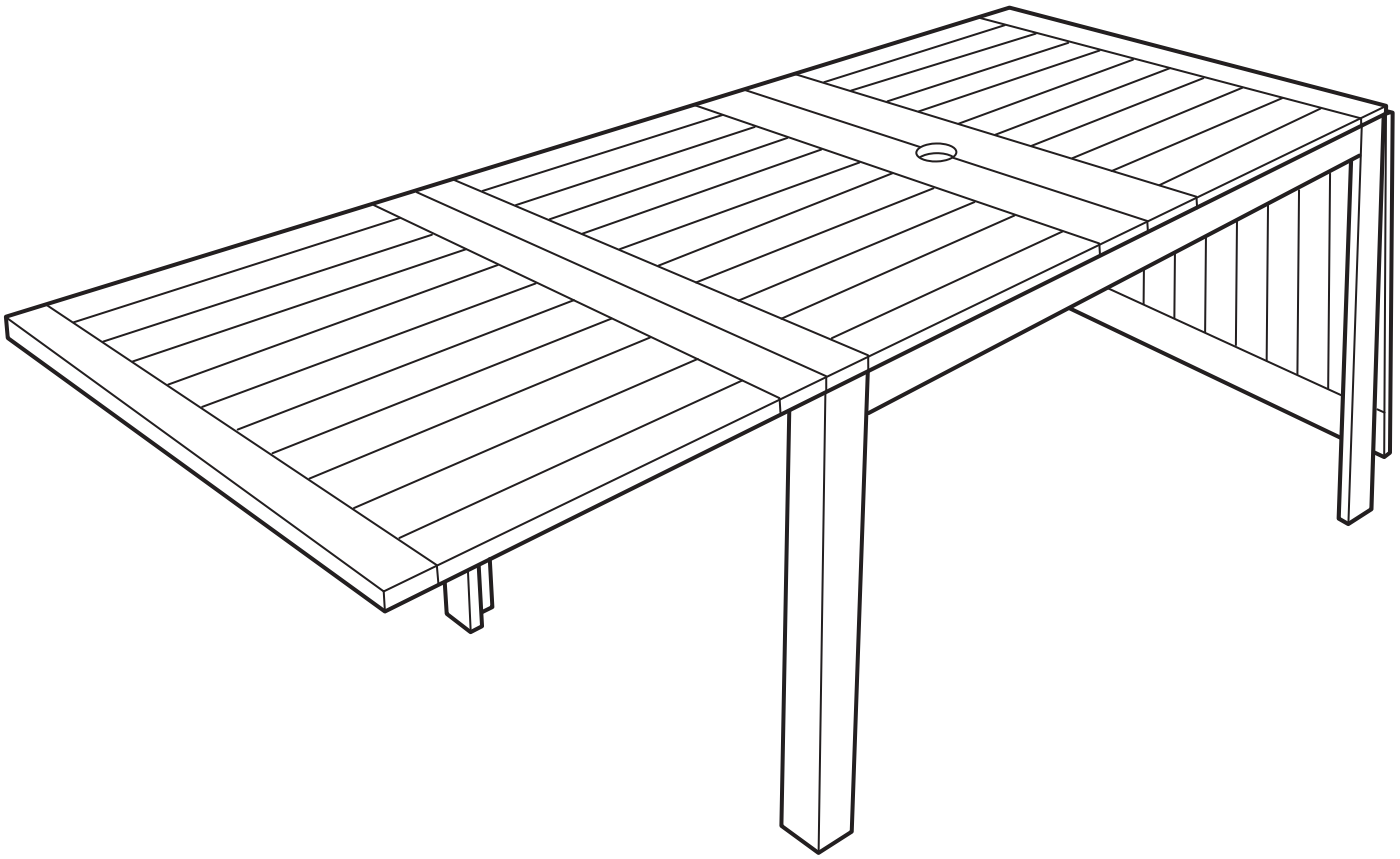

Design and Quality
IKEA of Sweden

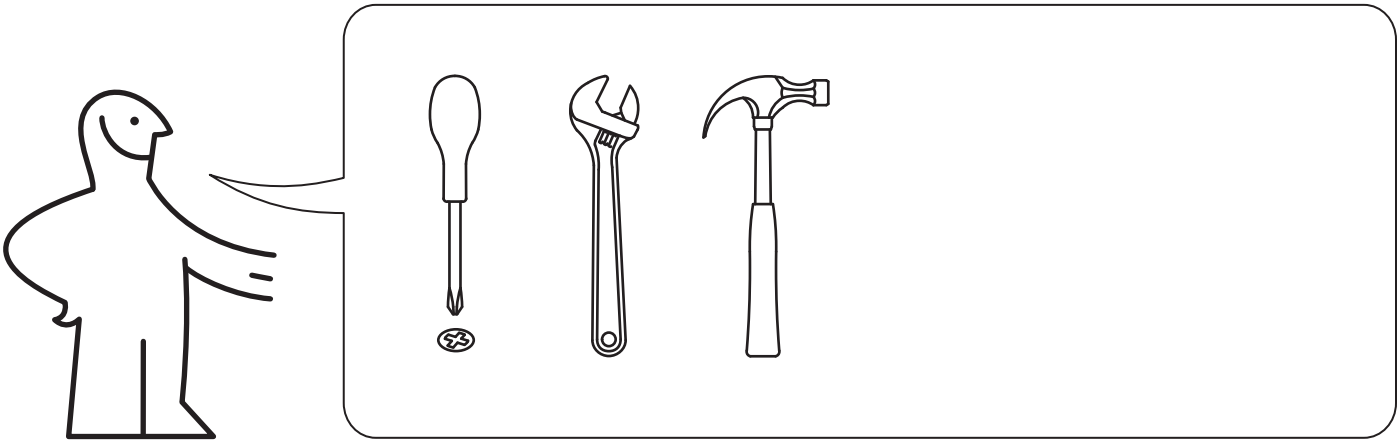

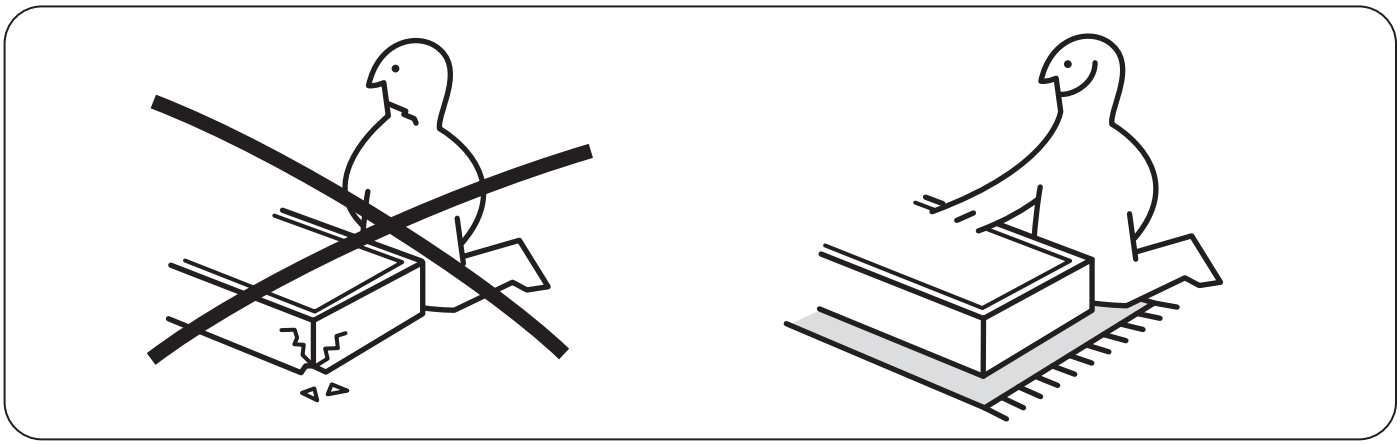

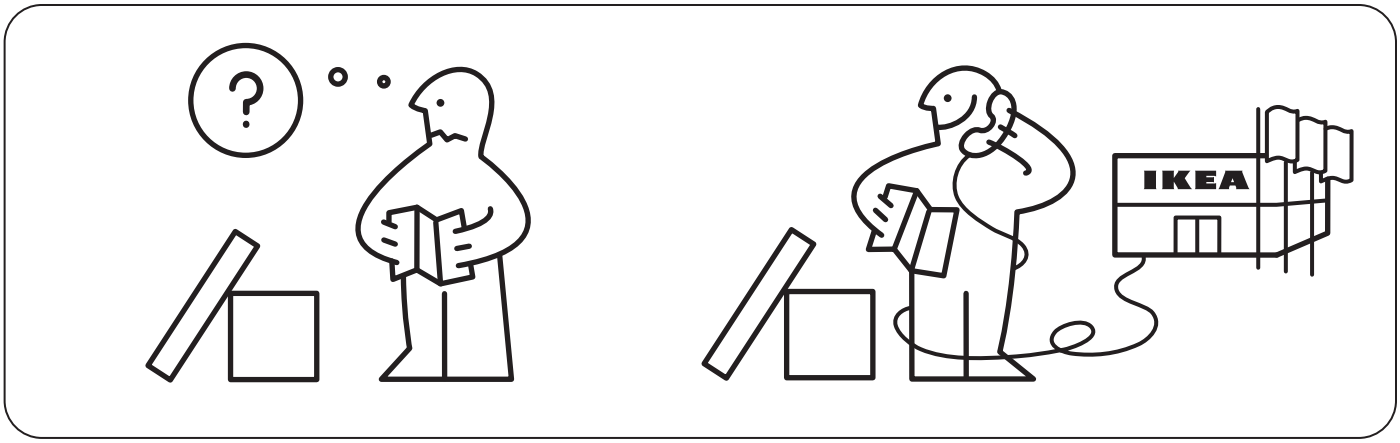
IKEA

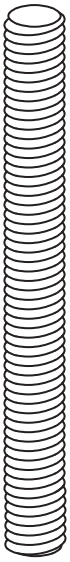

4x

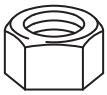

4x

4x

8x

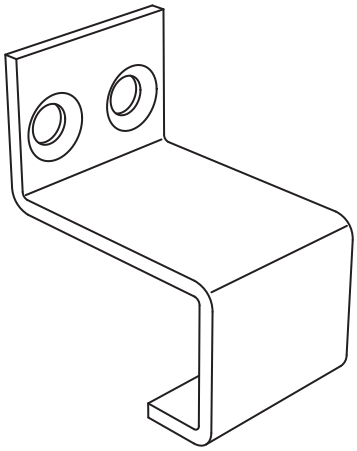

4x

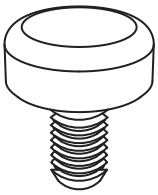

4x

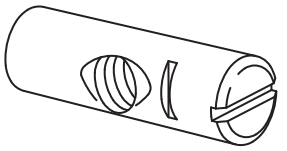

4x

1

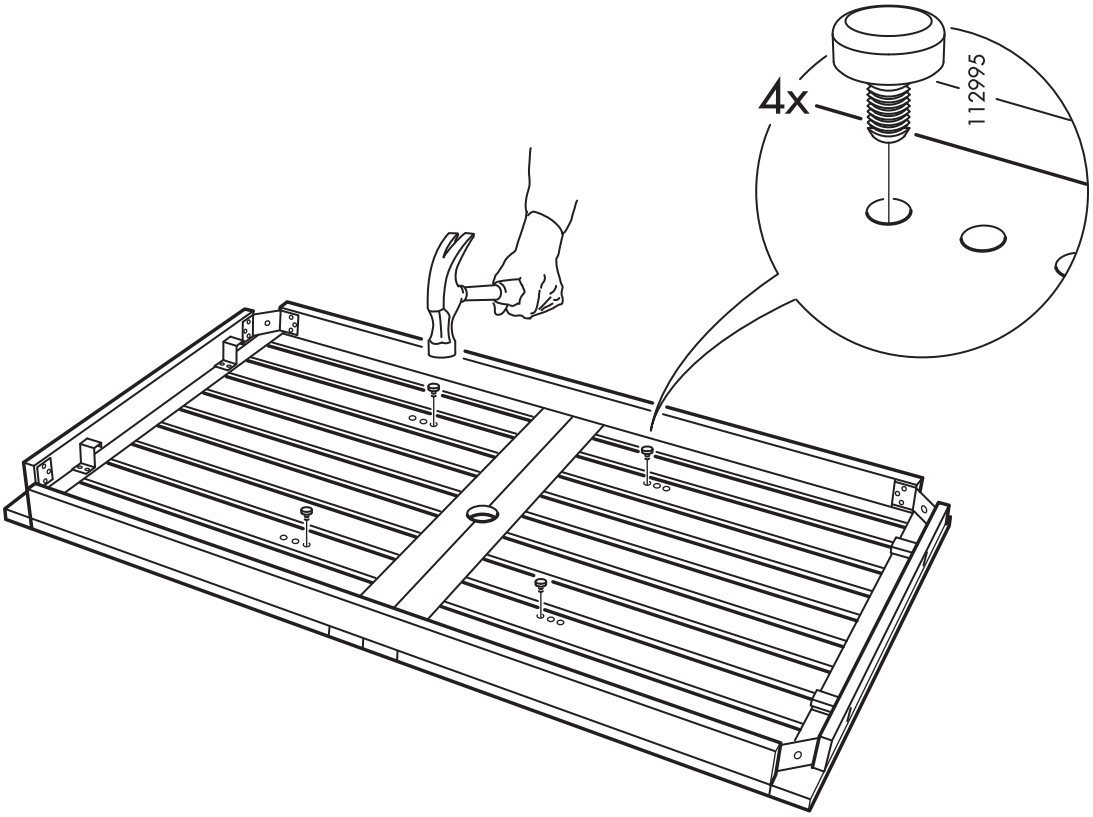

2

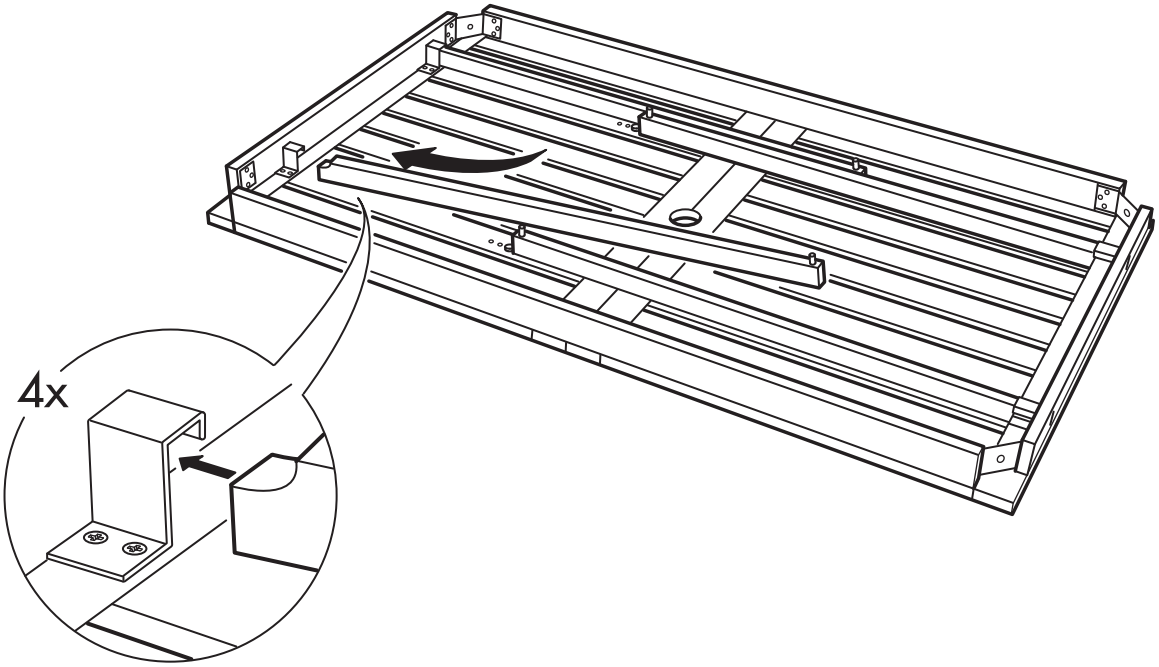

3

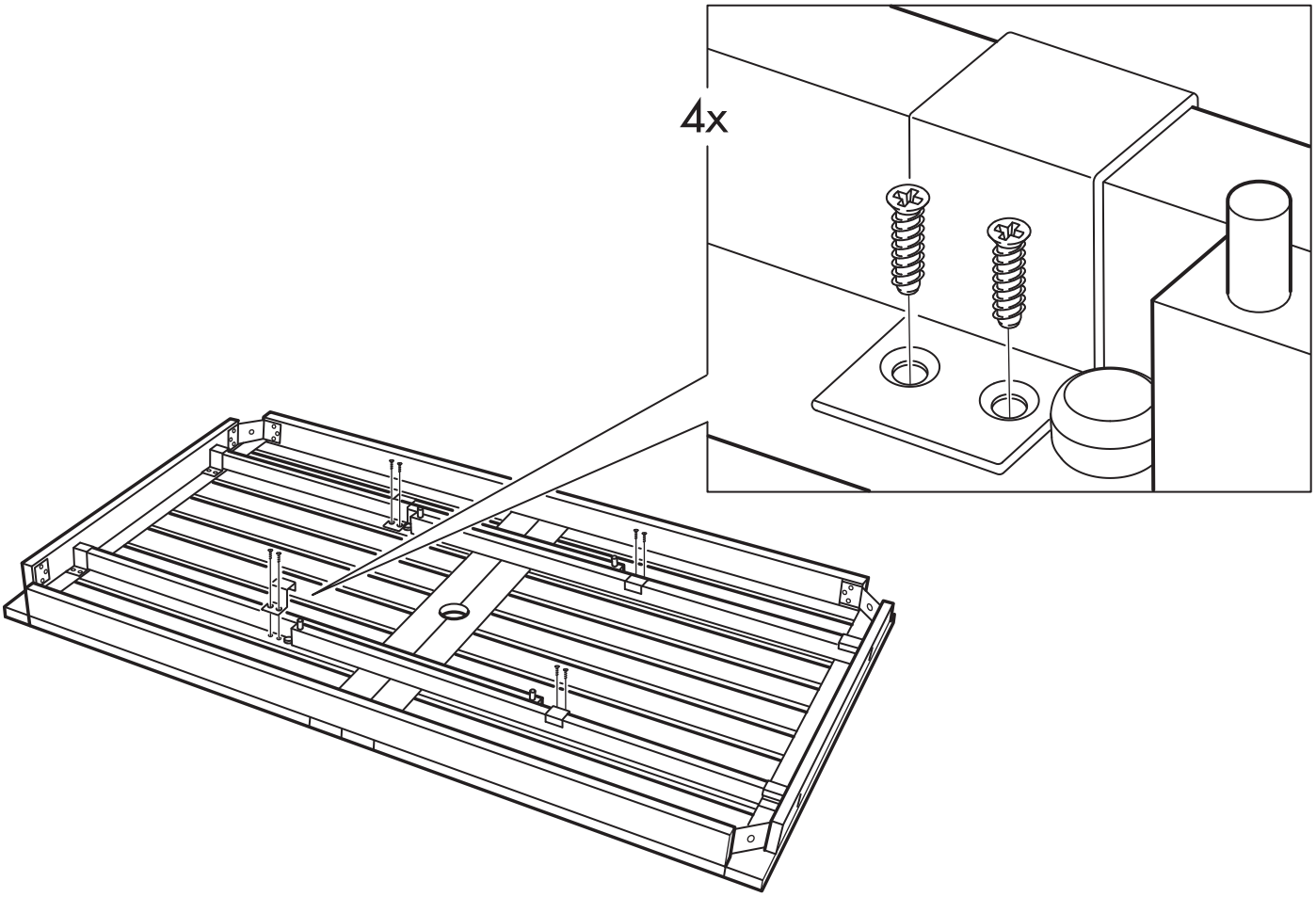

4

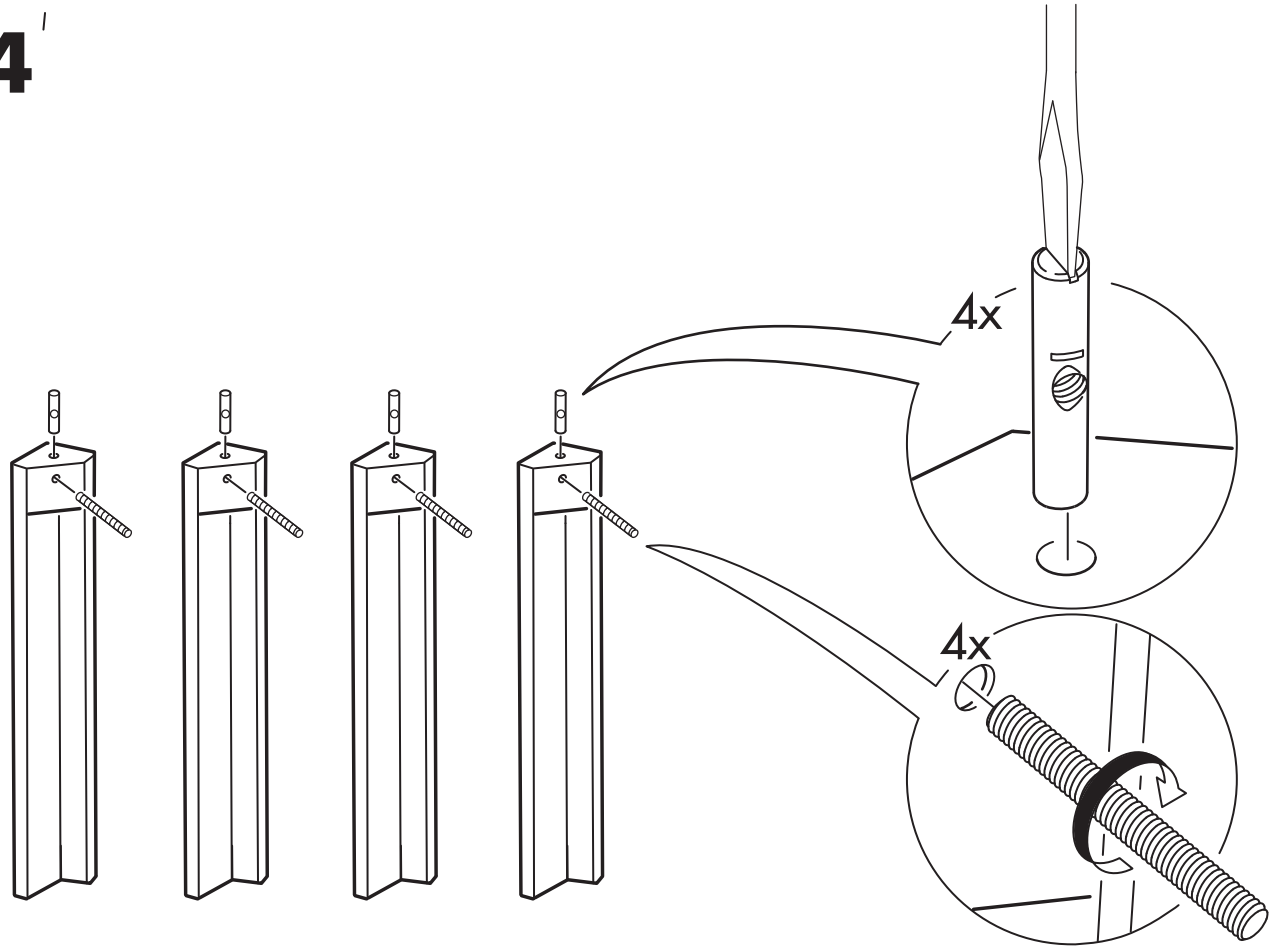

5

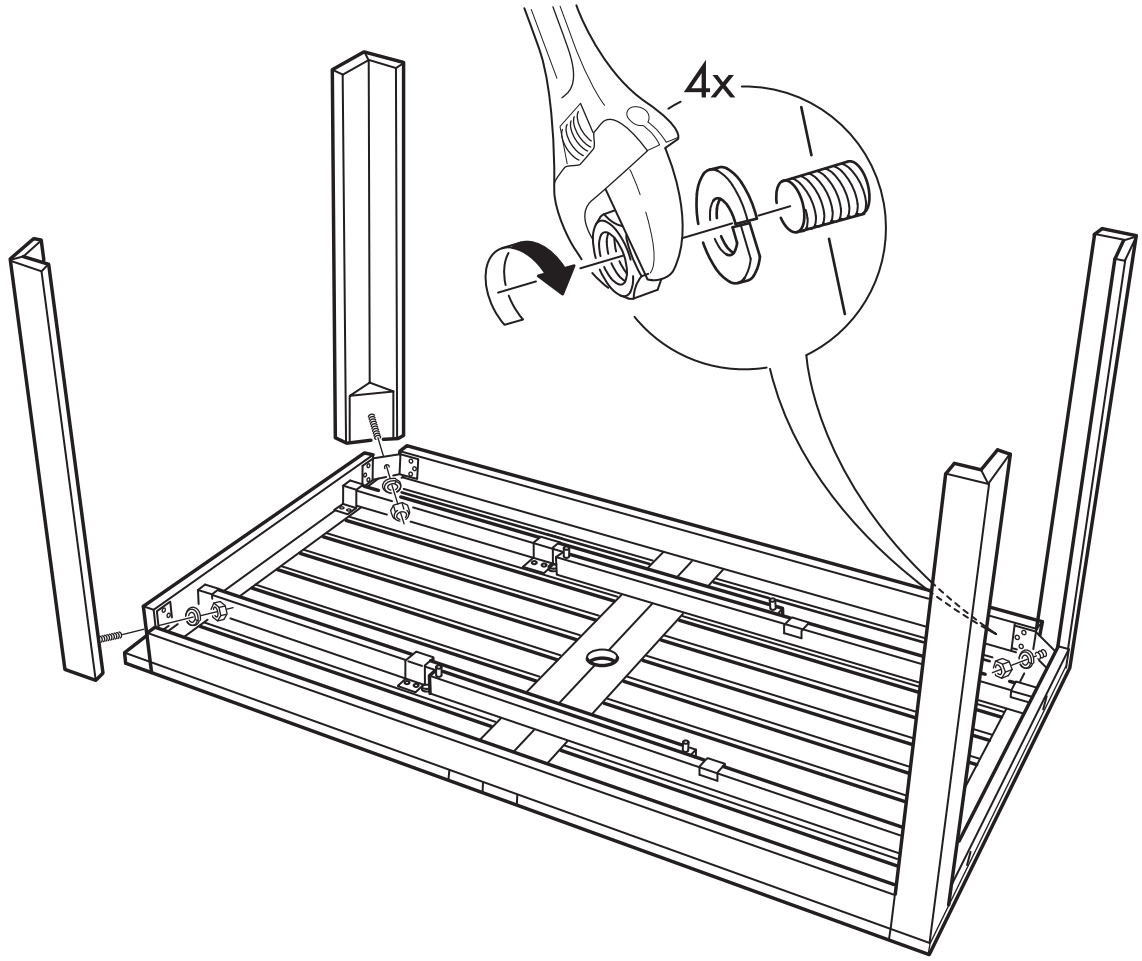

6

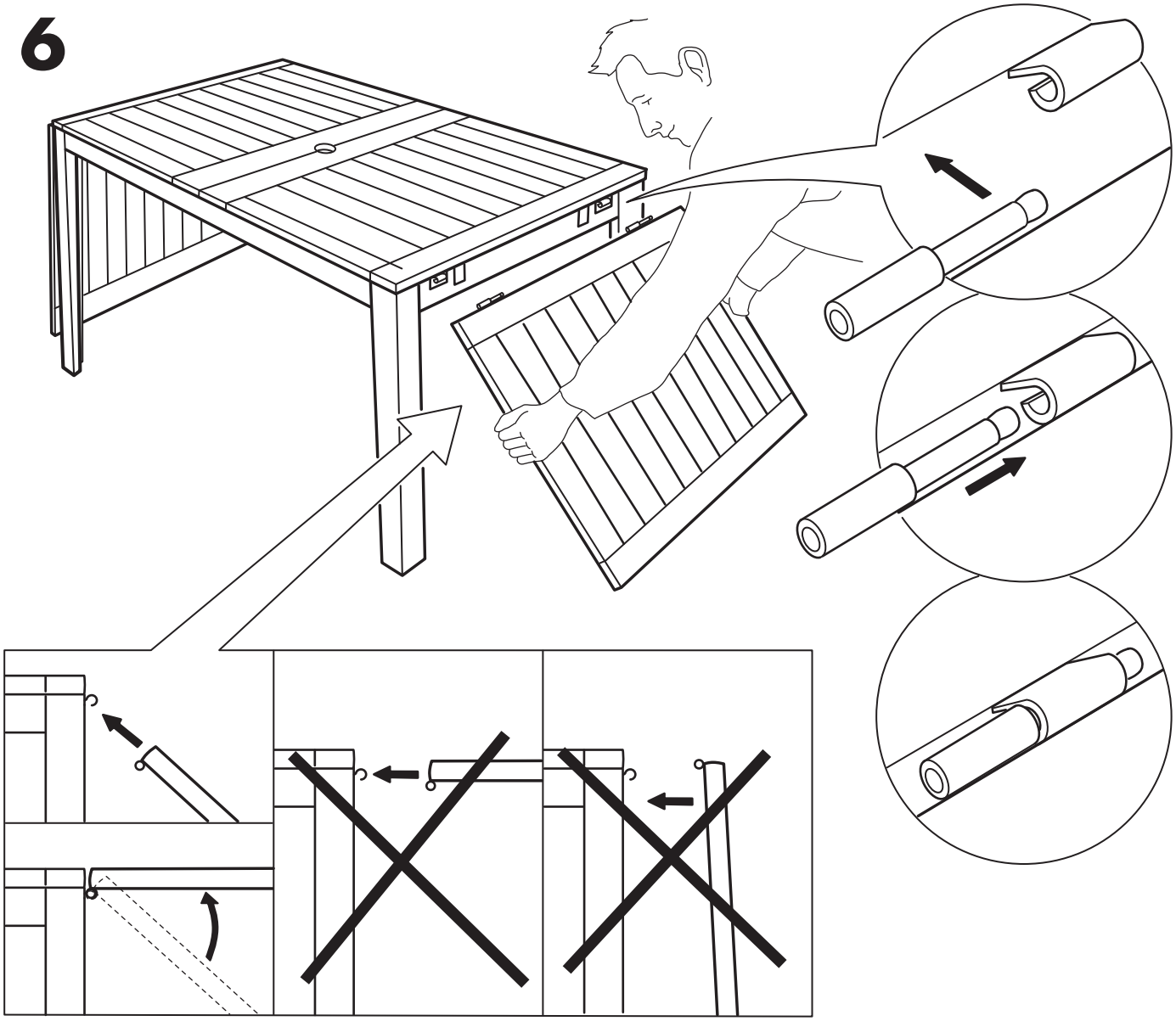

7

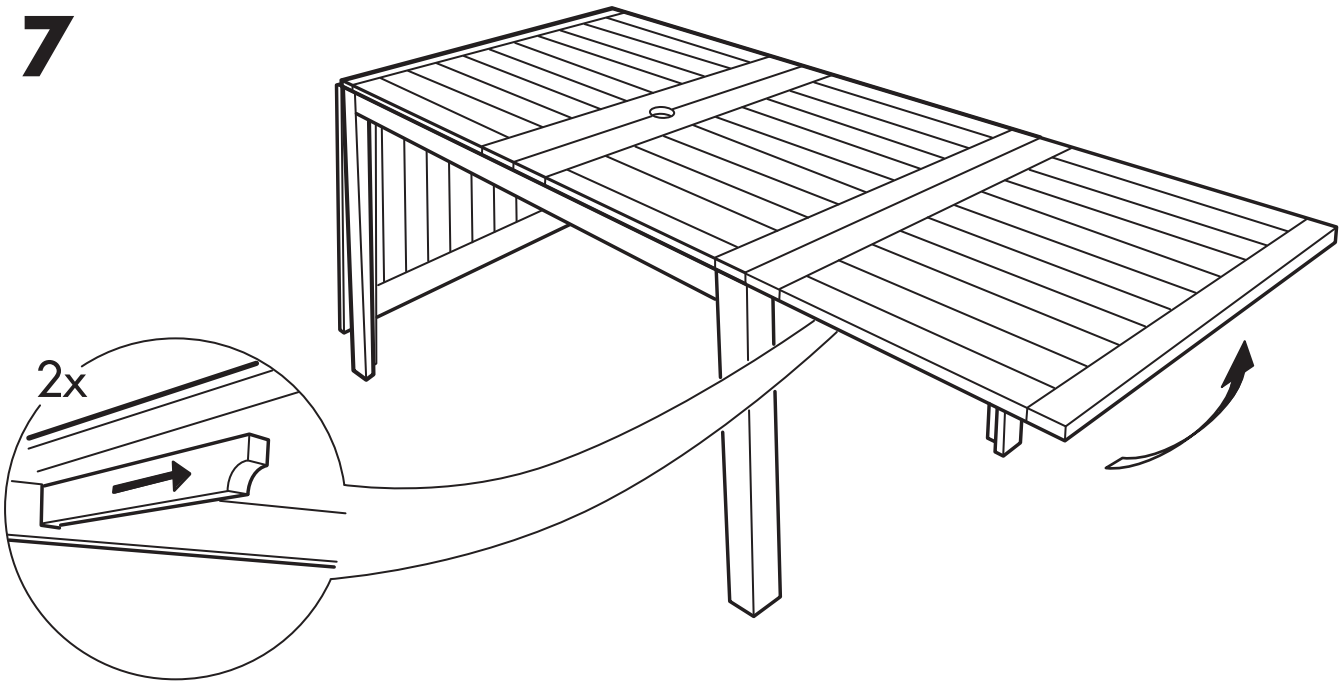

© Inter IKEA Systems B.V. 2006